S6161-L6-FSE-010 REVISION 1

0910-LP-101-7469

TECHNICAL MANUAL

FOR

COFFEE MAKER, BUNN MODELS VPR & VPS; OPERATING AND SERVICE MANUAL

"Distribution Statement "A": Approved for public release; distribution is unlimited."

DEPARTMENT OF THE NAVY
NAVAL SEA SYSTEMS COMMAND

30 SEPTEMBER 2002

0910LP1017469

APPROVAL AND PROCUREMENT RECORD PAGE

APPROVAL DATA FOR: S6161-L6-FSE-010 Revision 1

TITLE: Technical Manual for Coffee Maker VPR & VPS; Operating and Service Manual

APPROVAL AUTHORITY: Not Required

CONTRACT OR PURCHASE ORDER	SHIP APPLICABILITY	QUANTITY OF MANUALS	QUANTITY OF EQUIPMENT	BUILDING SHIPYARD
4500100627	CVN76	1	3	Northrop Grumman-Newport News

REMARKS:

1) Distributed to CVN76 in accordance with Contract No. N00024-95-C-2106, CDRL Item No. B006.

2) This material may be reproduced by or for the U.S. Government pursuant to the copyright license under the clause 252.227-7013 (DFARS Oct 1988).

CERTIFICATION: Not Required

Date: September 30, 2002

Bunn-o-Matic Corporation
P.O. Box 3227
Springfield, IL 62708-3227
CAGE No. 25628

BUNN®

VPR
VPS

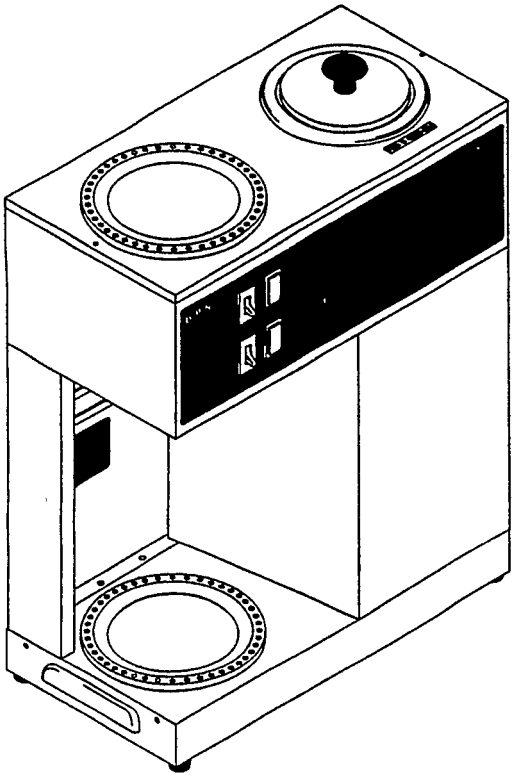

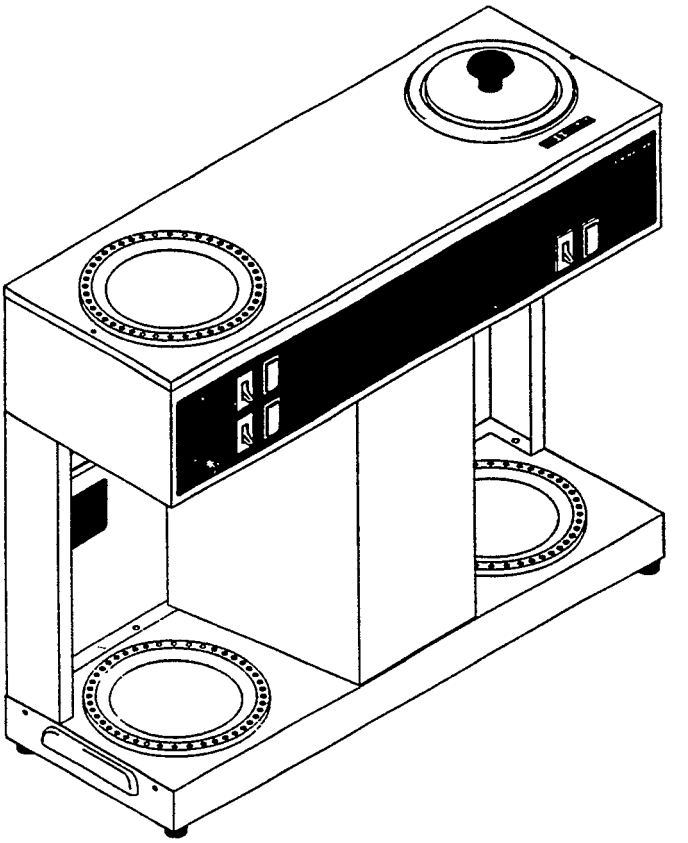

OPERATING & SERVICE MANUAL

BUNN-O-MATIC CORPORATION

POST OFFICE BOX 3227
SPRINGFIELD, ILLINOIS 62708-3227
PHONE: (217) 529-6601 FAX: (217) 529-6644

10053.0000G 10/97 ©1996 Bunn-O-Matic Corporation

INTRODUCTION

This equipment will brew a half-gallon batch of coffee into an awaiting dispenser. It is only for indoor use on a sturdy counter or shelf.

WARRANTY

Bunn-O-Matic Corp. ("Bunn") warrants the equipment manufactured by it to be commercially free from defects in material and workmanship existing at the time of manufacture and appearing within one year from the date of installation. This warranty does not apply to any equipment, component or part that was not manufactured by Bunn or that, in Bunn's judgement, has been affected by misuse, neglect, alteration, improper installation or operation, improper maintenance or repair, damage or casualty.

THE FOREGOING WARRANTY IS EXCLUSIVE AND IS IN LIEU OF ANY OTHER WARRANTY, WRITTEN OR ORAL, EXPRESS OR IMPLIED, INCLUDING, BUT NOT LIMITED TO, ANY IMPLIED WARRANTY OF EITHER MERCHANTABILITY OR FITNESS FOR A PARTICULAR PURPOSE. The agents, dealers or employees of Bunn are not authorized to make modifications to this warranty or to make additional warranties that are binding on Bunn. Accordingly, statements by such individuals, whether oral or written, do not constitute warranties and should not be relied upon.

The Buyer shall give Bunn prompt notice of any claim to be made under this warranty by telephone at (217) 529-6601 or by writing to Post Office Box 3227, Springfield, Illinois, 62708-3227. If requested by Bunn, the Buyer shall ship the defective equipment prepaid to an authorized Bunn service location. If Bunn determines, in its sole discretion, that the equipment does not conform to the warranty, Bunn shall repair the equipment with no charge for parts during the one year warranty period and no charge for labor by a Bunn Authorized Service Representative during the one year warranty period. If Bunn determines that repair is not feasible, Bunn shall, at its sole option, replace the equipment or refund the purchase price for the equipment.

THE BUYER'S REMEDY AGAINST BUNN FOR THE BREACH OF ANY OBLIGATION ARISING OUT OF THE SALE OF THIS EQUIPMENT, WHETHER DERIVED FROM WARRANTY OR OTHERWISE, SHALL BE LIMITED, AS SPECIFIED HEREIN, TO REPAIR OR, AT BUNN'S SOLE OPTION, REPLACEMENT OR REFUND. Bunn shall not be liable for any other damage or loss, including, but not limited to, lost profits, lost sales, loss of use of equipment, claims of Buyer's customers, cost of capital, cost of down time, cost of substitute equipment, facilities or services, or any other special, incidental or consequential damages.

USER NOTICES

Carefully read and follow all notices in this manual and on the equipment. All labels on the equipment should be kept in good condition. Replace any unreadable or damaged labels.

#00831.0000

⚠WARNING

- Fill water tank before turning-on thermostat or connecting appliance to power source.
- Use only on a properly protected circuit capable of the rated load.
- Electrically ground the chassis.
- Follow national/local electrical codes.
- Do not use near combustibles.

FAILURE TO COMPLY RISKS EQUIPMENT DAMAGE, FIRE, OR SHOCK HAZARD

READ THE ENTIRE OPERATING MANUAL INCLUDING THE LIMIT OF WARRANTY AND LIABILITY BEFORE BUYING OR USING THIS PRODUCT

THIS APPLIANCE IS HEATED WHENEVER CONNECTED TO A POWER SOURCE

831A 5/86 © 1986 Bunn-O-Matic Corporation

#00658.0000

⚠ CAUTION

FUNNEL CONTENTS ARE HOT

DISCARD DECANTER IF:

- CRACKED
- SCRATCHED
- BOILED DRY
- HEATED WHEN EMPTY
- USED ON HIGH FLAME OR EXPOSED ELECTRIC ELEMENTS

FAILURE TO COMPLY RISKS INJURY

PN 658 · 1985 BUNN O-MATIC CORPORATION

#12364.0002

⚠ CAUTION WARMERS AND SURFACES ARE HOT

#00833.0000

POUR IN WATER ONLY

ELECTRICAL REQUIREMENTS

CAUTION - The brewer must be disconnected from the power source until specified in *Initial Set-Up.*

The brewer has an attached cordset and requires 2-wire grounded service rated 120 volts ac, 15 amp, single phase, 60 Hz.

"A" models require 2-wire, grounded service rated 220 - 240 volts ac, 20 amp, single phase, 50 Hz. Proceed as follows:

Electrical Hook-Up (Model "A" Only)

CAUTION – Improper electrical installation will damage electronic components.

1. An electrician must provide electrical service as specified.
2. Using a voltmeter, check the voltage and color coding of each conductor at the electrical source.
3. Plug the power cord into the power connector located in the base on the rear of the brewer.

INITIAL SET-UP

CAUTION - The brewer must be disconnected from the power source throughout the initial set-up, except when specified in the instructions.

1. Insert an empty funnel into the funnel rails.
2. Place an empty dispenser under the funnel.
3. Pour three pitchers of tap water into the screened area on top of the brewer. Allow approximately two minutes between pitchers for water to flow into the tank. While the third pitcher of water is entering the tank, the tank will fill to capacity and the excess will flow from the sprayhead, out of the funnel, and into the dispenser.
4. When the flow of water from the funnel stops, connect the brewer to the power source and wait approximately twenty minutes for the water in the tank to heat to the proper temperature. Some water will drip from the funnel during this time; this is due to expansion and should not occur thereafter.
5. Pour one pitcher of tap water into the screened area on top of the brewer.
6. When water has stopped flowing from the funnel let the water in the tank reheat to the proper temperature.
7. Empty the dispenser. The brewer is now ready for use in accordance with the coffee brewing instructions below.

NOTE: The control thermostat will need to be adjusted downward to compensate for high altitudes. Refer to Steaming and spitting around the funnel on page 5 for instructions.

COFFEE BREWING

1. Insert a BUNN® filter into the funnel.
2. Pour the fresh coffee into the filter and level the bed of grounds by gently shaking.
3. Slide the funnel into the funnel rails.
4. Place an empty dispenser beneath the funnel.
5. Pour one pitcher of tap water into the screened area on top of the brewer.
6. When brewing is completed, simply discard the grounds and filter.

CLEANING

1. The use of a damp cloth rinsed in any mild, non-abrasive, liquid detergent is recommended for cleaning all surfaces on Bunn-O-Matic equipment.
2. Check and clean the sprayhead. The sprayhead holes must always remain open.
3. With the sprayhead removed, insert the deliming spring (provided) all the way into the sprayhead tube. When inserted properly, no more than two inches of spring should be visible. Saw back and forth five or six times.

NOTE – In hard water areas, this may need to be done daily. It will help prevent liming problems in the brewer and takes less than a minute.

TROUBLESHOOTING

A troubleshooting guide is provided to suggest probable causes and remedies for the most likely problems encountered. If the problem remains after exhausting the troubleshooting steps, contact the Bunn-O-Matic Technical Service Department.

- Inspection, testing, and repair of electrical equipment should be performed only by qualified service personnel.
- This brewer is heated at all times. Keep away from combustibles.

WARNING –
- Exercise extreme caution when servicing electrical equipment.
- Unplug the brewer when servicing, except when electrical tests are specified.
- Follow recommended service procedures
- Replace all protective shields or safety notices

PROBLEM	PROBABLE CAUSE	REMEDY
Water is not hot	1. Limit Thermostat or Thermal Cut-Off **CAUTION** - Do not eliminate or bypass limit thermostat/thermal cut-off. Use only BOM replacement part. Limit Thermostat - #04680.0002 Thermal Cut-off - #04776.0000	Refer to *Service* - Limit Thermostat or Thermal Cut-Off for testing procedures. See page 10 or 13
	2. Control Thermostat	Refer to *Service* - Control Thermostat for testing procedures. See page 9
	3. Tank Heater	Refer to *Service* - Tank Heater for testing procedures. See page 12
Spitting or excessive steaming	1. Lime Build-up **CAUTION** - Tank and tank components should be delimed regularly depending on local water conditions. Excessive mineral build-up on stainless steel surfaces can initiate corrosive reactions resulting in serious leaks.	Inspect the tank assembly for excessive lime deposits. Delime as required.
	2. Control Thermostat	Refer to *Service* - Control Thermostat for testing procedures. See page 9

(Revised January 1997)

TROUBLESHOOTING (cont.)

PROBLEM	PROBABLE CAUSE	REMEDY
Dripping from sprayhead	1. Lime Build-up **CAUTION** - Tank and tank components should be delimed regularly depending on local water conditions. Excessive mineral build-up on stainless steel surfaces can initiate corrosive reactions resulting in serious leaks.	Inspect the tank assembly for excessive lime deposits. Delime as required.
Beverage overflows dispenser	1. Dispenser	The dispenser must be completely empty before starting a brew cycle.
Weak beverage	1. Filter Type	BUNN® paper filters must be used for proper extraction.
	2. Coffee Grind	A fine or drip grind must be used for proper extraction.
	3. Sprayhead	A six-hole stainless steel sprayhead must be used for proper extraction.
	4. Funnel Loading	The BUNN® paper filter must be centered in the funnel and the bed of grounds leveled by gentle shaking.
	5. Water Temperature	Place an empty funnel on an empty dispenser beneath the sprayhead. Pour-in a pitcher of tap water and check the water temperature immediately below the sprayhead with a thermometer. The reading should not be less than 195°F. Adjust the control thermostat to increase the water temperature. Replace if necessary.

TROUBLESHOOTING (cont.)

PROBLEM	PROBABLE CAUSE	REMEDY
Dry coffee grounds remain in the funnel	1. Funnel Loading	The BUNN® paper filter must be centered in the funnel and the bed of grounds leveled by gently shaking.
Brewer is making unusal noises	1. Tank Heater	Remove and clean lime off the tank heater. See page 12
Cool beverage serving temperature	1. ON/OFF Warmer Switch	Refer to *Service* - ON/OFF Warmer Switch for testing procedures. See page 11
	2. Warmer Element(s)	Refer to *Service* - Warmer Element(s) for testing procedures. See page 14

SERVICE

This section provides procedures for testing and replacing various major components used in this brewer should service become necessary. Refer to *Troubleshooting* for assistance in determining the cause of any problem.

WARNING - Inspection, testing, and repair of electrical equipment should be performed only by qualified service personnel. The brewer should be disconnected from the power source when servicing, except when electrical tests are required and the test procedure specifically states to plug-in the brewer.

COMPONENT ACCESS

WARNING - Disconnect the brewer from the power source before the removal of any panel or the replacement of any component.

All components are accessible by the removal of the top cover, fill basin and warmer assemblies.

The top cover is attached with two #4-40 screws.

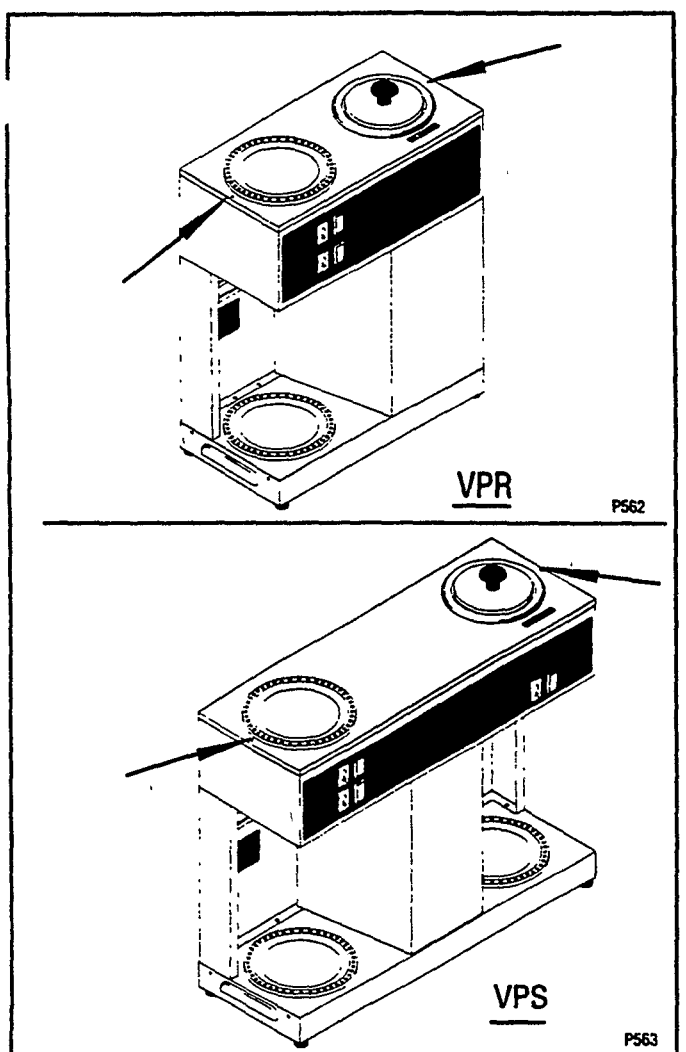

FIG. 1 COMPONENT ACCESS

The tank inlet fitting secures the fill basin to the tank lid.

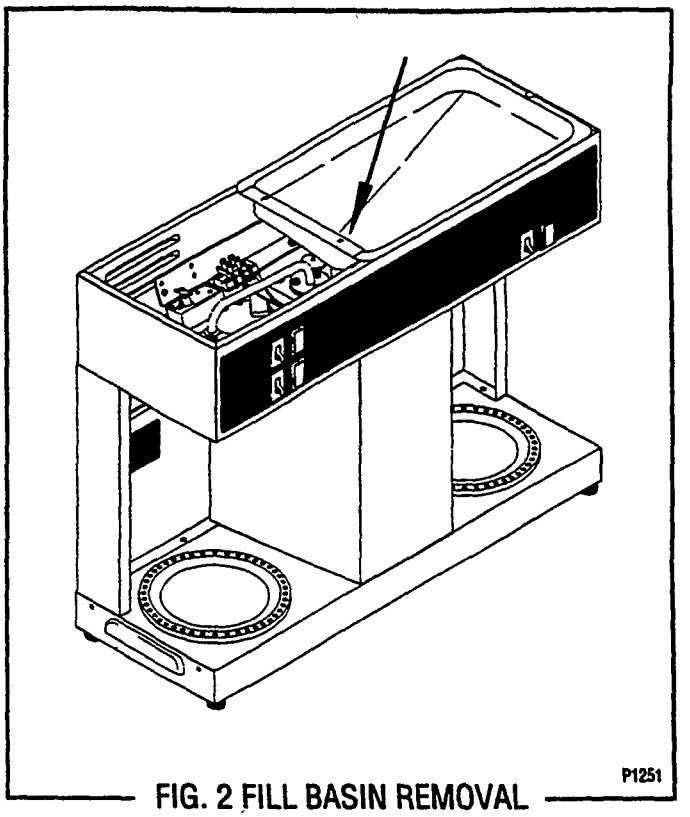

FIG. 2 FILL BASIN REMOVAL

Contents

Control Thermostat 9
Limit Thermostat (VPR - VPS) 10
ON/OFF Switch (Warmers) 11
Tank Heater 12
Thermal Cut-Off (VPRA - VPSA) 13
Warmer Elements 14
Wiring Diagrams ..... 15 & 16

CONTROL THERMOSTAT

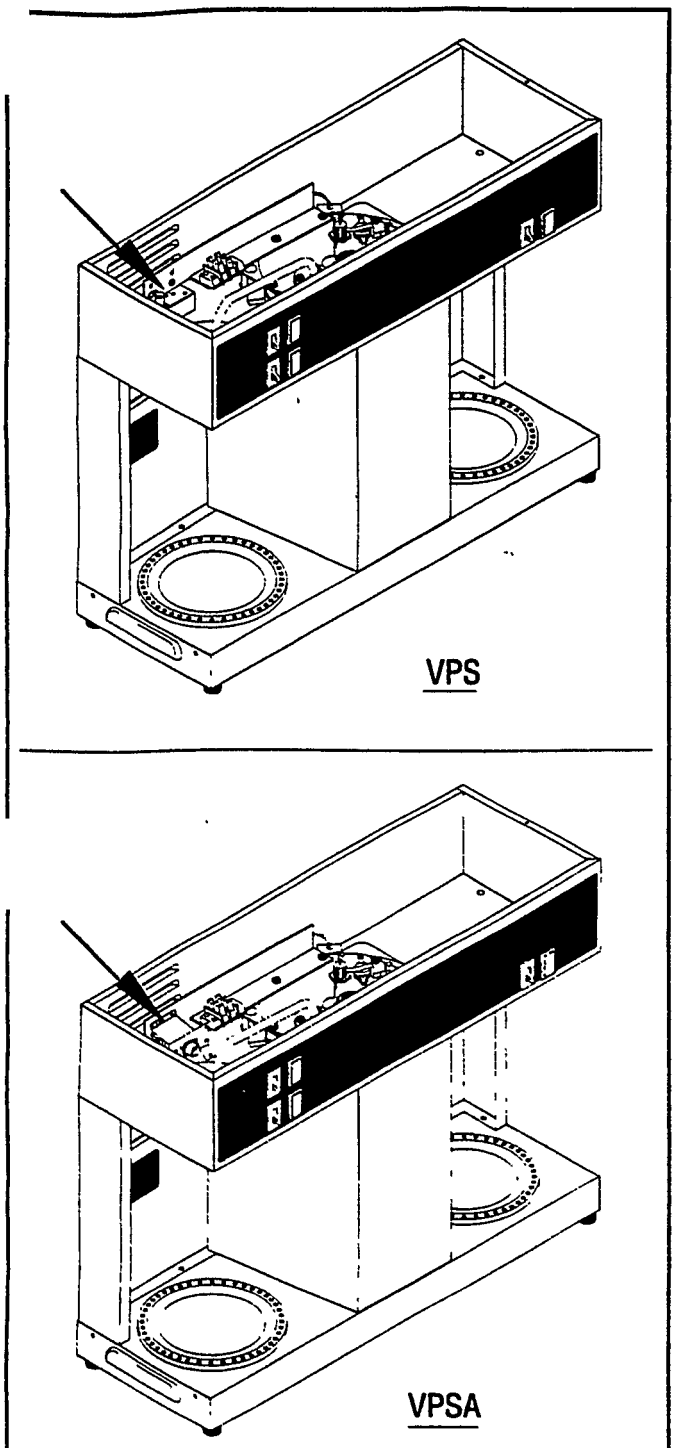

FIG. 3 CONTROL THERMOSTAT

Location:

The control thermostat is located inside the hood on the left end of the mounting bracket.

Test Procedures:

1. Disconnect the brewer from the power source.
2. Locate the black wire on the control thermostat.
3. Check the voltage across the black wire on the control thermostat and the white wire on the tank heater or the red wire on the tank heater with a voltmeter. Plug-in the brewer to the power source. The indication must be:
   a) 120 volts ac for two wire 120 volt models.
   b) 220 volts ac for two wire 220 volt models.
4. Disconnect the brewer from the power source.

If voltage is present as described, proceed to #5.
If voltage is not present as described, refer to the wiring diagrams and check the brewer wiring harness.

5. Locate the blue/black wire on the control thermostat.
6. Gently remove the capillary bulb and grommet from the tank.
7. Check the voltage across the blue/black wire of the control thermostat and the white wire on the tank heater or red wire on the tank heater with a voltmeter when the control thermostat is turned "ON" (fully counterclockwise for thermostat with tee handle control or fully clockwise for thermostats with control knob). Plug-in the brewer to the power source. The indication must be:
   a) 120 volts ac for two wire 120 volt models.
   b) 220 volts ac for two wire 220 volt models.
8. Disconnect the brewer from the power source.

If voltage is present as described, reinstall the capillary tube into the tank to the line 4.5" above the bulb, the control thermostat is operating properly.
If voltage is not present as described, replace the thermostat.

Removal and Replacement:

1. Remove wires from control thermostat leads or terminals.
2. Remove the thermostat capillary bulb by firmly pulling-up on the capillary at the tank lid. This will disengage the grommet from the tank lid.
3. Remove the two #8-32 screws securing the control thermostat to the mounting bracket inside the hood.

SERVICE (cont.)

CONTROL THERMOSTAT (cont.)

4. Slide the grommet to the line 4.5" above the bulb on the new capillary tube.
5. Insert the capillary bulb through the hole in the tank lid and press the grommet firmly and evenly so that the groove in the grommet fits into the tank lid.
6. Carefully bend the capillary tube so that the tube and bulb inside the tank are in the vertical position.

NOTE - The capillary tube must be clear of any electrical termination and not kinked.

7. Using two #8-32 screws secure the control thermostat to the mounting bracket inside the hood.
8. Refer to Fig. 4 when reconnecting the wires.
9. Adjust the control thermostat as required.

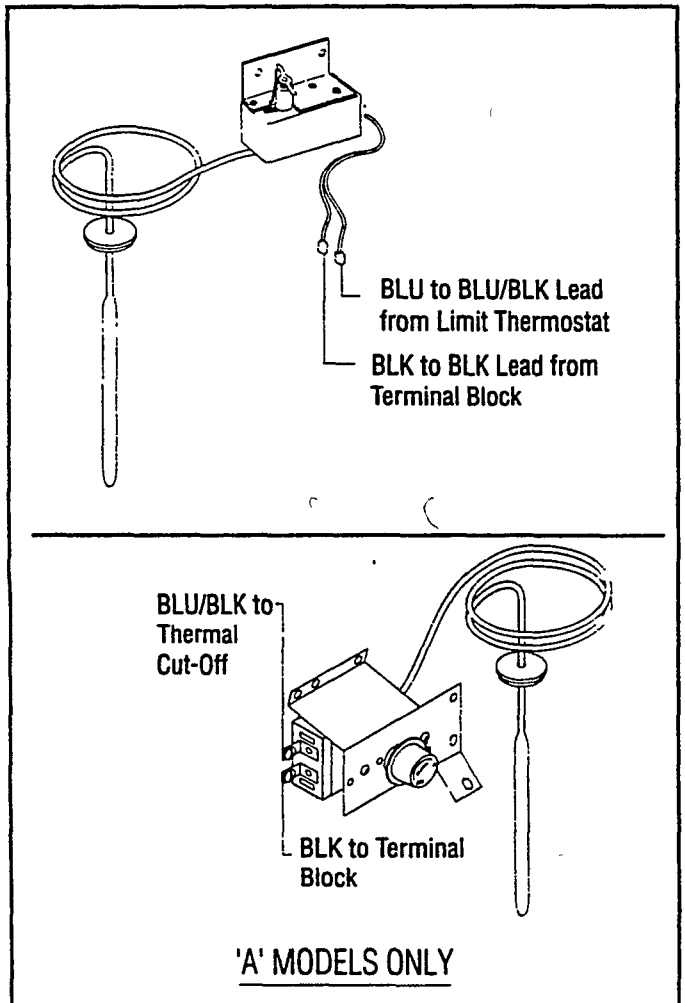

FIG.4 CONTROL THERMOSTAT TERMINALS

LIMIT THERMOSTAT - VPR, VPS

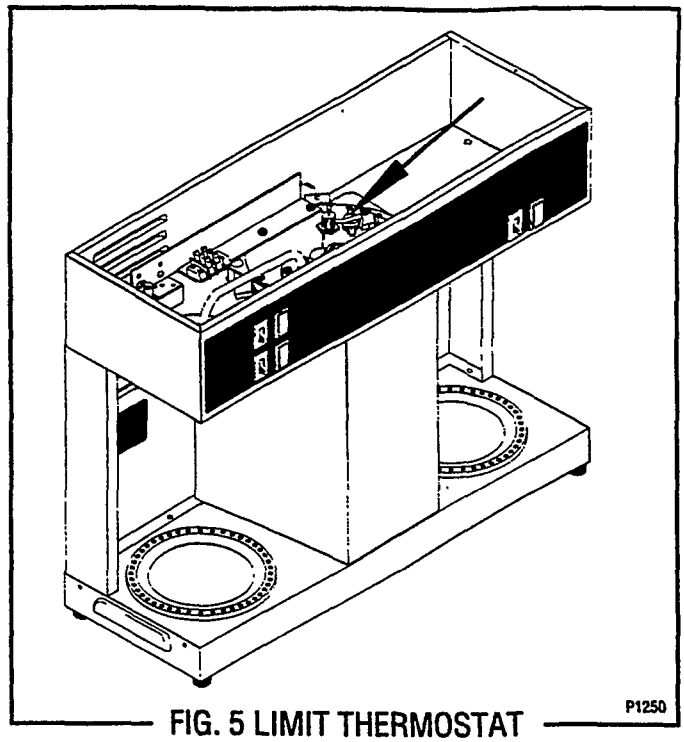

FIG. 5 LIMIT THERMOSTAT

Location:

The limit thermostat is located inside the hood on the right side of the tank lid.

Test Procedures:

1. Disconnect the brewer from the power source.
2. Disconnect the blue/black and black wires from the limit thermostat.
3. Check for continuity across the limit thermostat terminals with an ohmmeter.

If continuity is present as described, the limit thermostat is operating properly.
If continuity is not present as described, replace the limit thermostat.

Removal and Replacement:

1. Remove all wires from limit thermostat terminals.
2. Carefully slide the limit thermostat out from under the retaining clip and remove limit thermostat.
3. Carefully slide the new limit thermostat into the retaining clip.
4. Refer to Fig. 6 when reconnecting the wires.

LIMIT THERMOSTAT

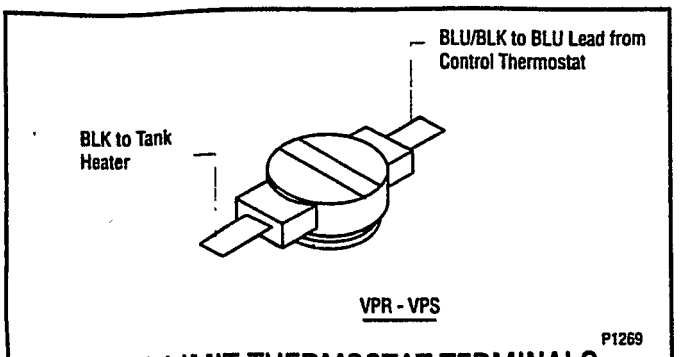

FIG. 6 LIMIT THERMOSTAT TERMINALS

ON/OFF WARMER SWITCH

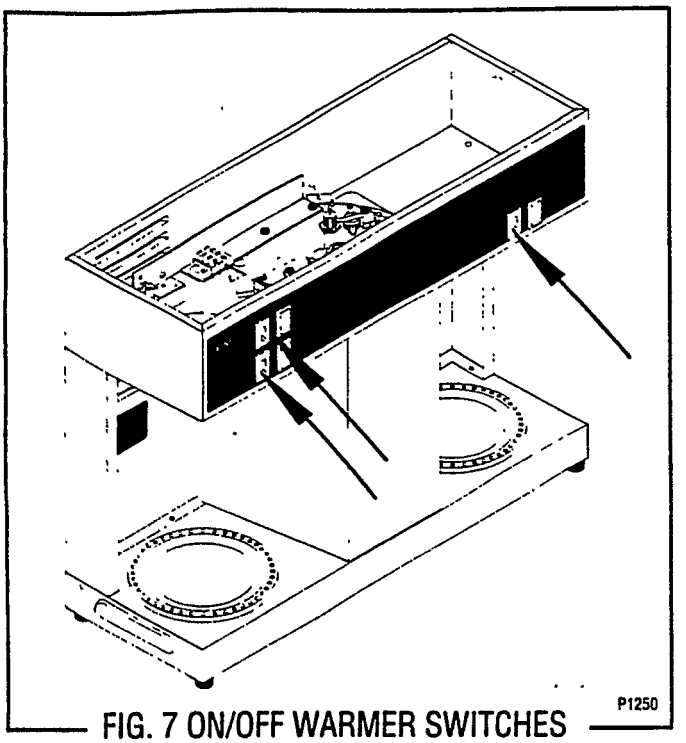

FIG. 7 ON/OFF WARMER SWITCHES

Location:

The ON/OFF warmer switches are located on the front of the hood.

Test Procedure:

1. Disconnect the brewer from the power source.
2. Viewing the switch from the back locate the black wire from the switch terminal.
3. With the switch in the "ON" position check the voltage across the black wire of the switch and the white wire on the lamp or red wire on the lamp with a voltmeter. Plug-in the brewer to the power source. The indication must be:
   a) 120 volts ac for two wire 120 volt models.
   b) 220 volts ac for two wire 220 volt models.
4. Disconnect the brewer from the power source.

If voltage is present as described, proceed to #5.
If voltage is not present as described, refer to the *Wiring Diagrams* and check the brewer wiring harness.

5. Remove both wires from the switch and check for continuity across the terminals with the switch in the "ON" position. Continuity must not be present when the switch is in the "OFF" position.

If continuity is present as described, reconnect the wires to the terminals.
If continuity is not present as described, replace the switch.

Removal and Replacement:

1. Remove the wires from the switch terminals.
2. Compress the clips inside the hood and gently push the switch through the opening.
3. Push the new switch into the opening and spread the clips to hold switch in the hood.
4. Refer to Fig. 8 when reconnecting the wires.

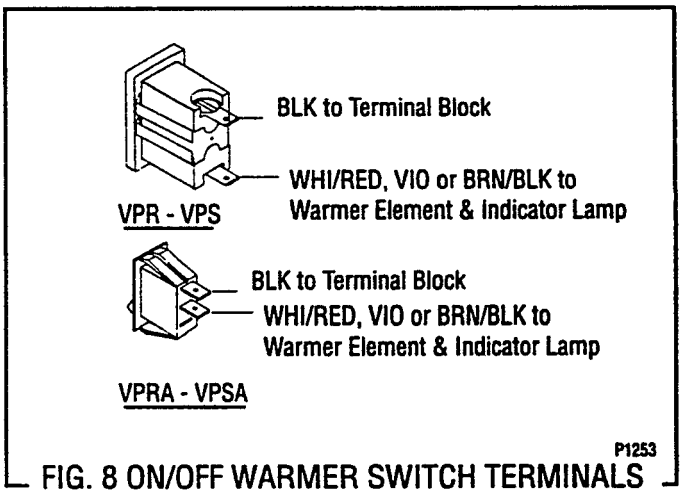

FIG. 8 ON/OFF WARMER SWITCH TERMINALS

TANK HEATER

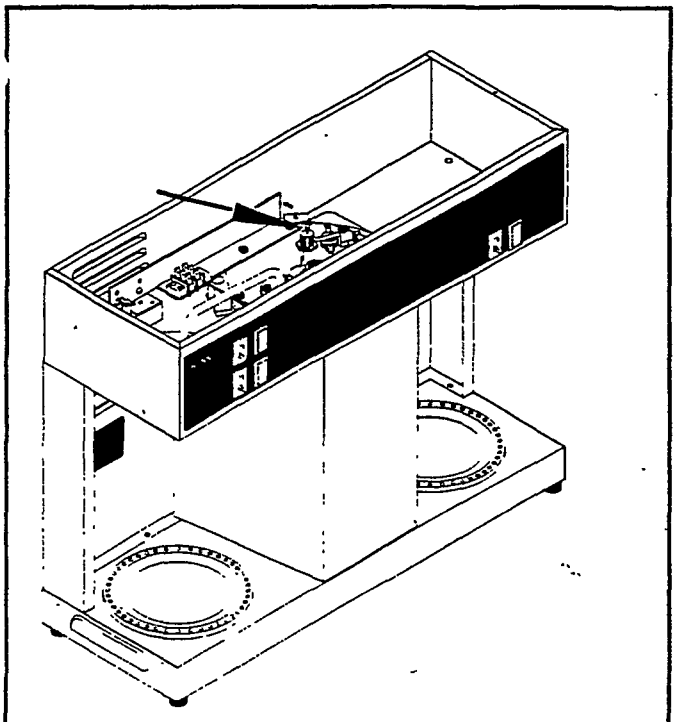

FIG. 9 TANK HEATER

Location:

The tank heater is located inside the tank and secured to the tank lid.

Test Procedures:

1. Disconnect the brewer from the power supply.
2. Check the voltage across the black and white wires on 120 volt models or the black and red wires for 220 volt models with a voltmeter. Plug-in the brewer to the power source. The indication must be:
   a) 120 volts ac for two wire 120 volt models.
   b) 220 volts ac for two wire 220 volt models.
3. Disconnect the brewer from the power source.

If voltage is present as described, proceed to #4
If voltage is not present as described, refer to the *Wiring Diagrams* and check wiring harness.

4. Disconnect the black wire and the white wire or red wire from the tank heater terminals.
5. Check for continuity across the tank heater terminals.

If continuity is present as described, reconnect the wires, the tank heater is operating properly.
If continuity is not present as described, replace the tank heater.

NOTE- If the tank heater remains unable to heat, remove and inspect heater for cracks in the sheath.

Removal and Replacement:

1. Remove the tank inlet fitting securing the fill basin to the tank lid, remove fill basin and tank inlet gasket. Set all three parts aside for reassembly.
2. Disconnect the black wire on the terminal block from the tank heater and disconnect the blue/black wire from the limit thermostat or thermal cut-off to the control thermostat.
3. Disconnect the black wire and the white or red wire from the tank heater terminals.
4. Remove sprayhead and the hex nut securing the sprayhead tube to the hood. Set aside for reassembly.
5. Remove the eight #8-32 nuts securing the tank lid to the tank.
6. Remove the tank lid with limit thermostat or thermal cut-off, sprayhead tube and tank heater.
7. Remove the two hex nuts securing the tank heater to the tank lid. Remove tank heater with gaskets and discard.
8. Install new tank heater with gaskets on the tank lid and secure with two hex nuts.
9. Install tank lid with limit thermostat or thermal cut-off, sprayhead tube and tank heater using eight #8-32 hex nuts.
10. Secure sprayhead tube to hood using a hex nut.
11. Install sprayhead.
12. Reconnect the wires to the limit thermostat or thermal cut-off, tank heater and control thermostat. See limit thermostat, thermal cut-off and control thermostat sections in this manual when reconnecting wires.
13. Install fill basin, secure with tank inlet fitting and gasket.
14. Refer to Fig. 10 when reconnecting the tank heater wires.

TANK HEATER (Cont.)

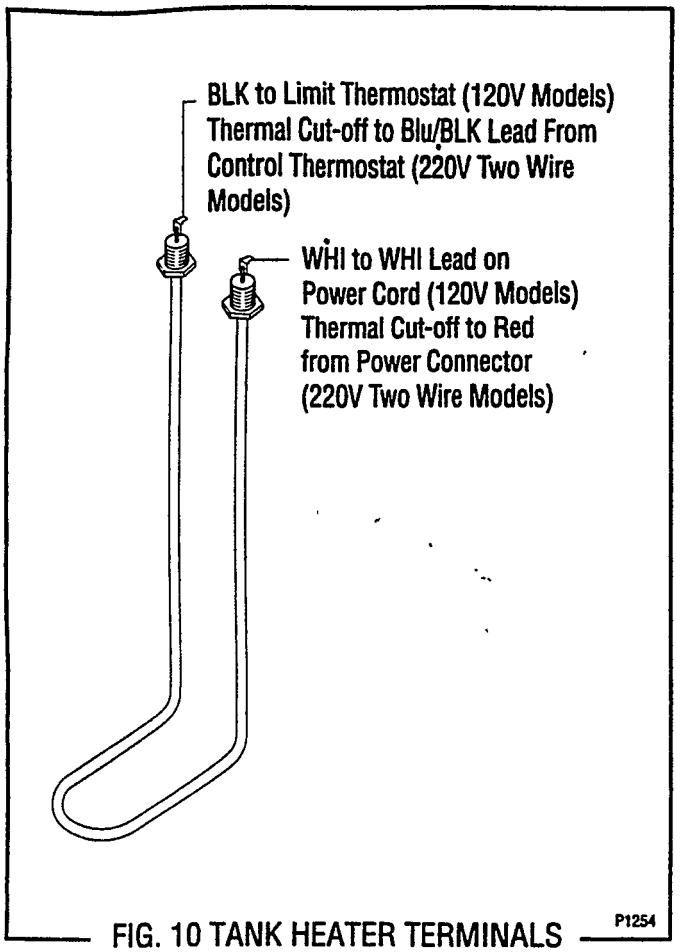

FIG. 10 TANK HEATER TERMINALS

THERMAL CUT-OFF - VPRA, VPSA

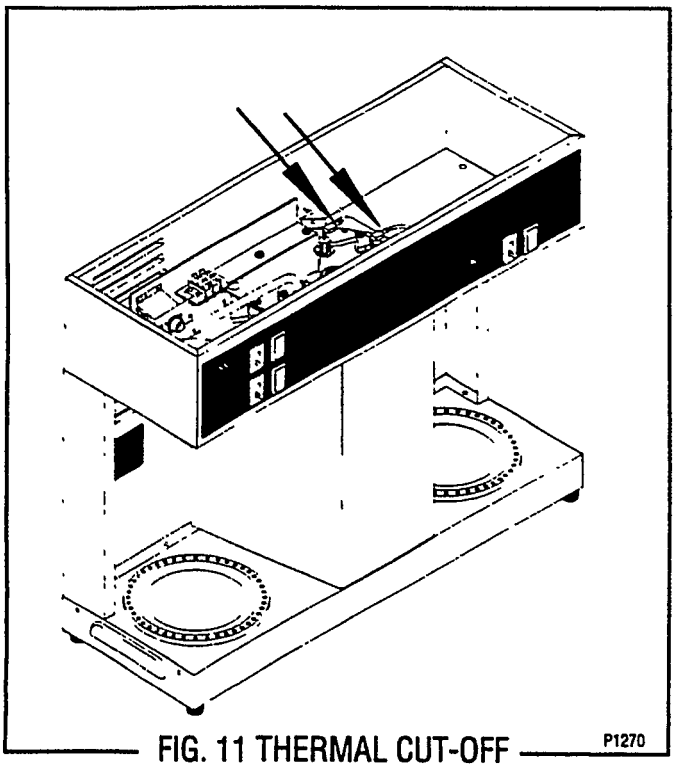

FIG. 11 THERMAL CUT-OFF

Location:

The thermal cut-outs are located inside the hood connected to the tank heater terminals.

Test Procedures:

1. Disconnect the brewer from the power source.
2. Disconnect the thermal cut-off from the tank heater and the red wire from the power connector.
3. Check for continuity across the thermal cut-off terminals with an ohmmeter.

If continuity is present as described, the thermal cut-off is operating properly.
If continuity is not present as described, replace the thermal cut-off.

4. Disconnect the thermal cut-off from the tank heater and blue/black from the control thermostat.
5. Check for continuity across the thermal cut-off terminals with an ohmmeter.

If continuity is present as decribed, the thermal cut-off is operating properly.
If continuity is not present as described, replace the thermal cut-off.

Removal and Replacement:

1. Disconnect the thermal cut-off from the tank heater and the red wire from the power connector or the blue/black wire from the control thermostat.
2. Install new thermal cut-off.
3. Refer to Fig. 12 when reconnecting wires.

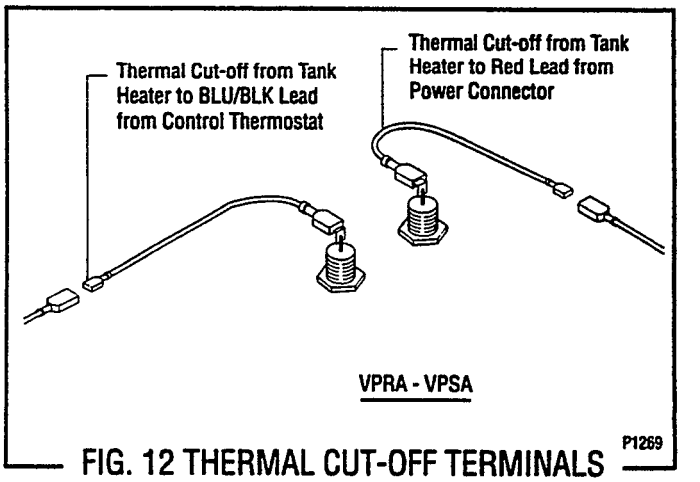

FIG. 12 THERMAL CUT-OFF TERMINALS

(Added January 1997)

WARMER ELEMENTS

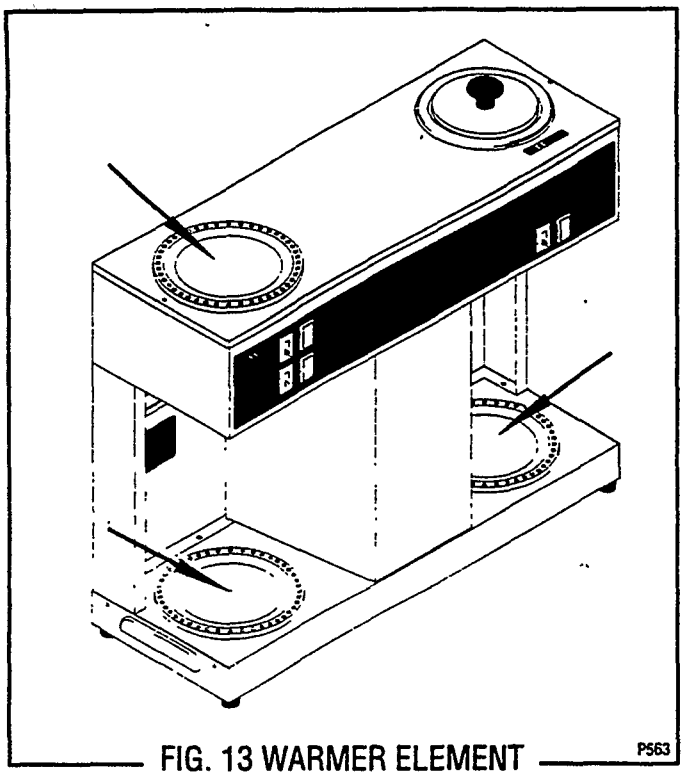

FIG. 13 WARMER ELEMENT

Location:

The warmer elements are located under the warmer plates.

Test Procedures:

1. Disconnect the brewer from the power source.
2. Use the white to the power cord or red wire to the power connector and the white/red, violet or brown/black wire on the "ON/OFF" switch.
3. Check voltage across the white or red and white/red, violet or brown/black with a voltmeter with the "ON/OFF" switch in the "ON" position. Plug-in the brewer to the power source. The indication must be:
   a) 120 volts ac for two wire 120 volt models.
   b) 220 volts ac for two wire 220 volt models.
4. Disconnect the brewer from the power source.

If voltage is present as described, proceed to #5.
If voltage is not present as described, refer to wiring diagrams and check brewer wiring harness.

5. Remove both wires from the warmer element and check the continuity across the two terminals on the warmer element.

If continuity is present as described, reconnect the wires on the warmer element.
If continuity is not present as described, replace the warmer element.

Removal and Replacement:

1. Remove the three #4-40 screws securing the warmer assembly to the brewer.
2. Lift the warmer assembly from the brewer.
3. Disconnect the two wires from the warmer element terminals.
4. Remove the two #8-32 nuts securing the warmer element to the warmer plate.
5. Securely install new warmer element.
6. Reconnect the two wires to warmer element terminals.
7. Securely install warmer assembly on the brewer.
8. Refer to Fig. 14 when reconnecting the wires.

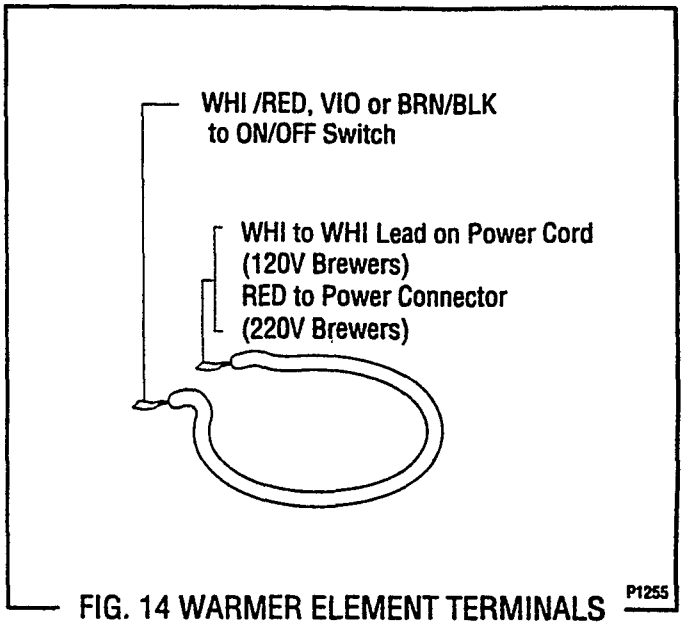

FIG. 14 WARMER ELEMENT TERMINALS

SCHEMATIC WIRING DIAGRAM VPR

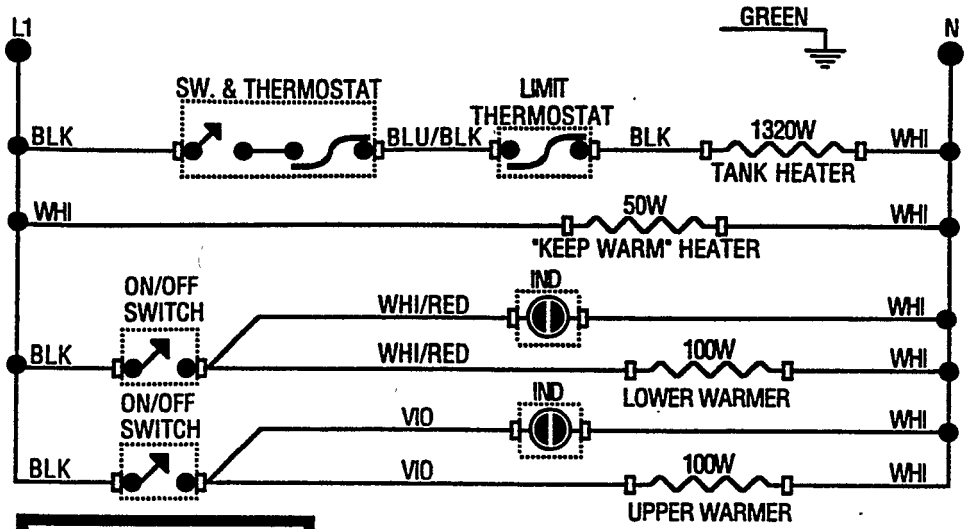

120 VOLTS A C
2 WIRE
SINGLE PHASE
60 HZ

SCHEMATIC WIRING DIAGRAM VPS

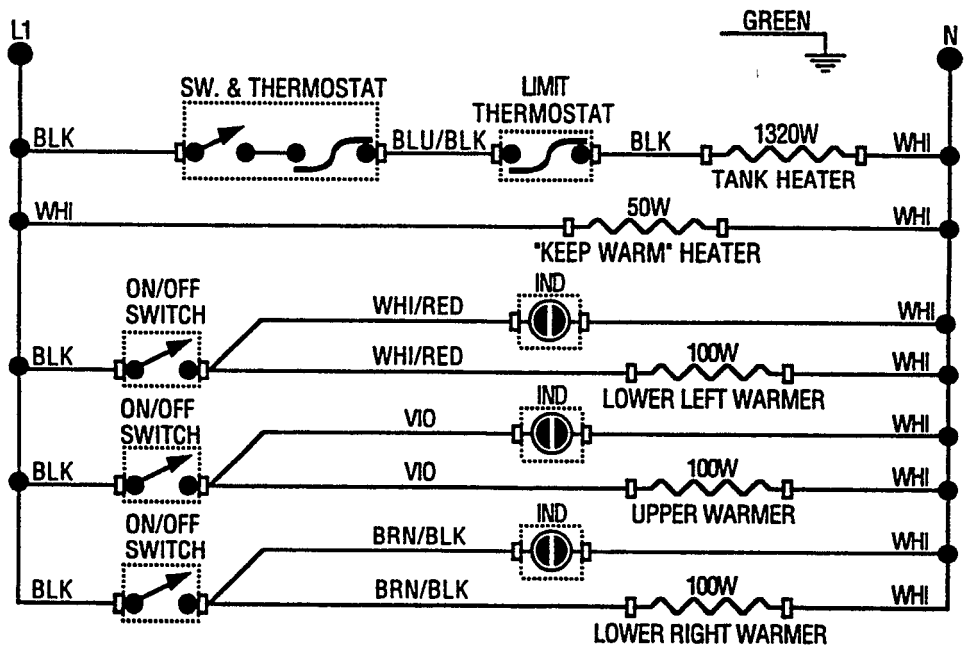

120 VOLTS A C
2 WIRE
SINGLE PHASE
60 HZ

(Added January 1997)

SCHEMATIC WIRING DIAGRAM VPRA

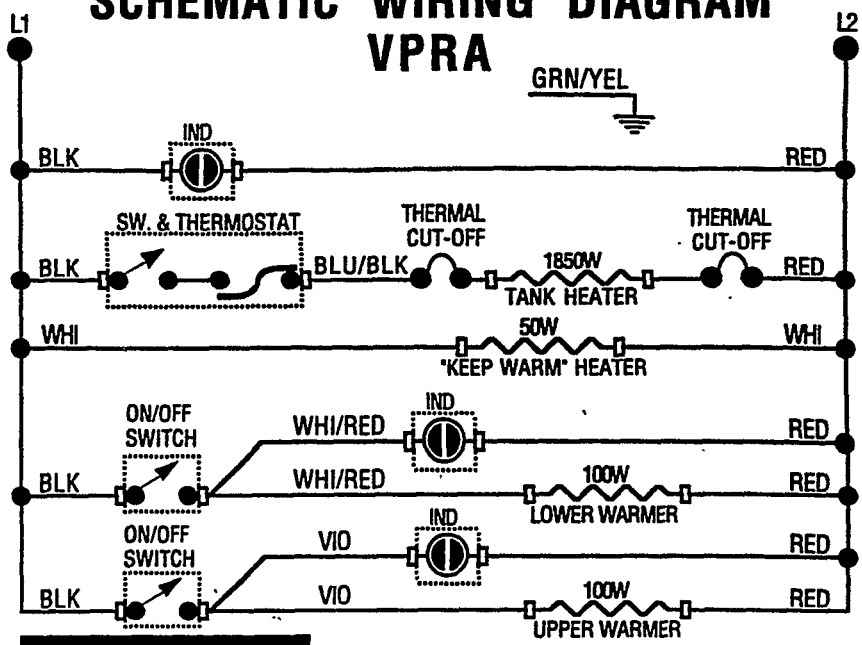

220 VOLTS A C
2 WIRE
SINGLE PHASE

SCHEMATIC WIRING DIAGRAM VPSA

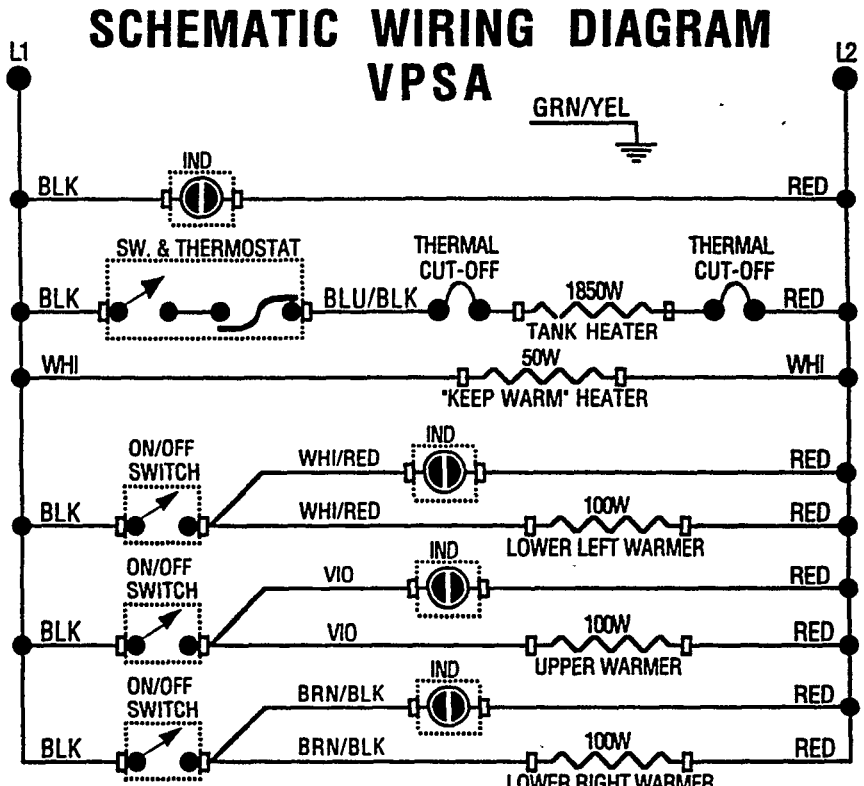

220 VOLTS A C
2 WIRE
SINGLE PHASE

BUNN®

VPR
VPS

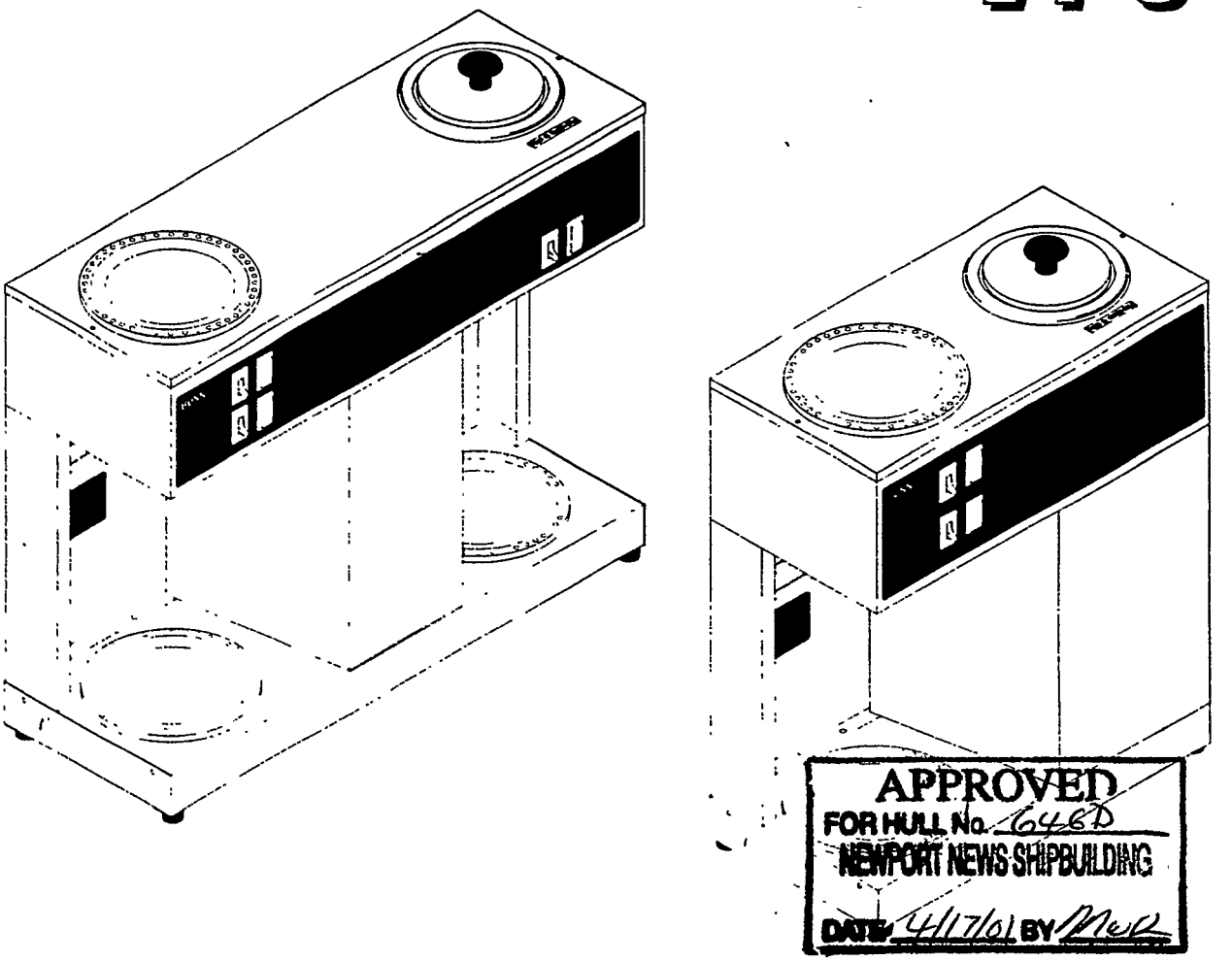

ILLUSTRATED PARTS CATALOG

Designs, materials, weights, specifications, and dimensions for equipment or replacement parts are subject to change without notice.

BUNN-O-MATIC CORPORATION

POST OFFICE BOX 3227
SPRINGFIELD, ILLINOIS 62708-3227
PHONE: (217) 529-6601 FAX: (217) 529-6644

10784.0000G 12/98 ©1994 Bunn-O-Matic Corporation

TABLE OF CONTENTS

Electrical and Operating Controls 14, 15A
Funnels, Pitcher and Filter Basket 16
Fill Basin 10
Hood and Top Covers (VPR-VPRA) 6
Hood and Top Covers (VPS-VPSA) 8
Galley Kit 18
Numerical Index 20
Tank and Components 12, 13A
Trunks and Panel (VPR-VPRA) 2
Trunks and Panels (VPS-VPSA) 4

(Revised December 1996)

TRUNKS AND PANELS VPR - VPRA

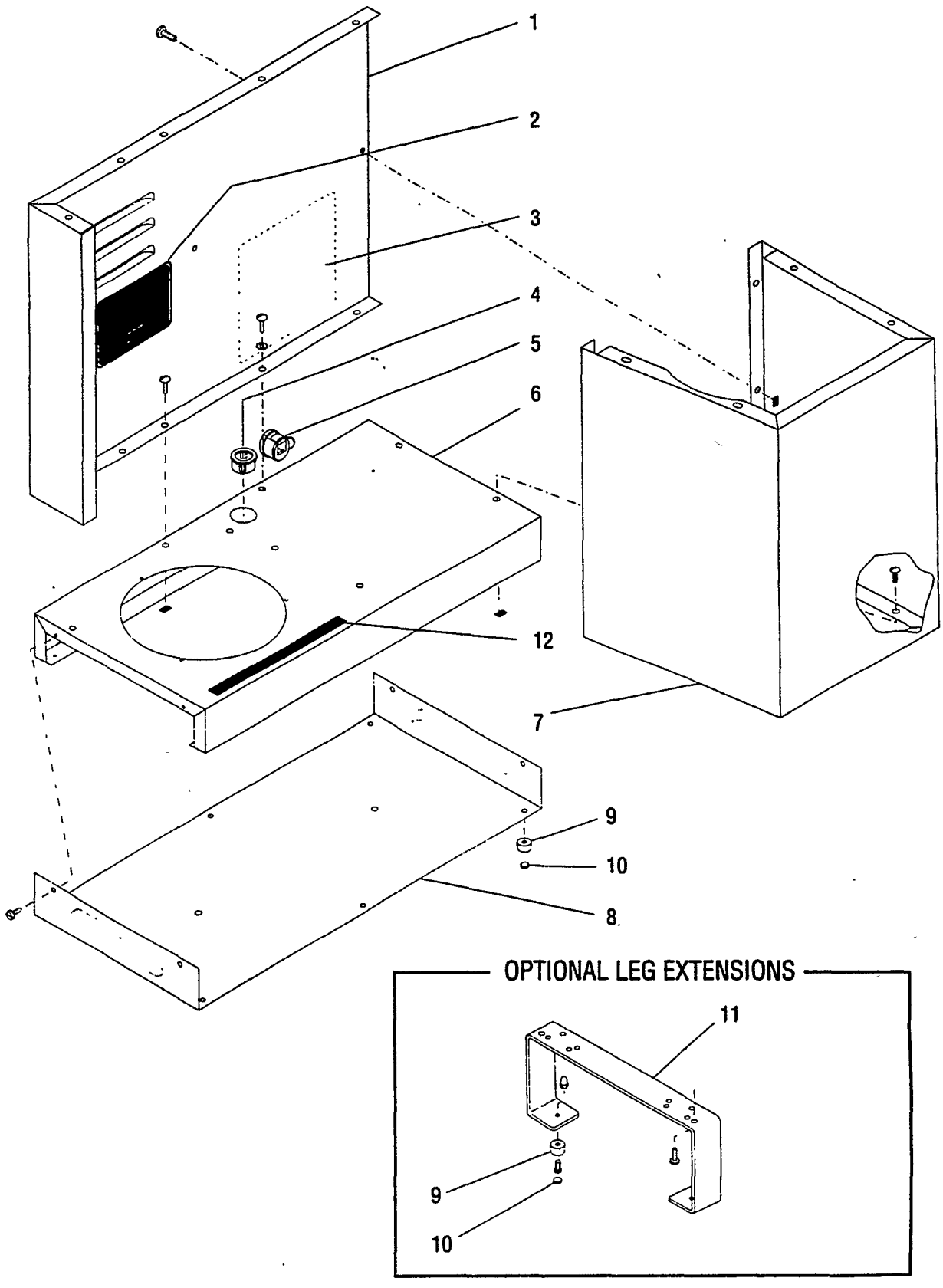

P-551

TRUNKS AND PANELS VPR - VPRA

ITEM	PART NO.	QTY.	DESCRIPTION
1	25132.0000	1	Panel W/Decals, Trunk Rear - BRN (Includes items 2 & 3)
	25132.0001	1	Panel W/Decals, Trunk Rear - BLK (Includes items 2 & 3)
	01311.0000	5	Screw, Truss Head #8-32 x .25"
	00978.0000	5	Fastener, Flat Type #8-32
	01511.0000	1	Lockwasher, Ext. Tooth #8
2	00658.0000	1	Decal, Caution - Decanter/Funnel
3	00831.0000	1	Decal, Warning-Electrical
4	01663.0000	1	Bushing, Snap - .875" Dia
5	01686.0000	1	Bushing, Strain Relief - Nylon
6	06202.0000	1	Housing, Base (VPR)
	06201.0002	1	Housing, Base (VPRA)
7	06204.0000	1	Housing, Trunk Front (WG)
	06204.0003	1	Housing, Trunk Front (BLK)
	01311.0000	6	Screw, Truss Head #8-32 x .25"
	00978.0000	6	Fastener, Flat Type #8-32
8	06203.0000	1	Cover, Base
	02332.0002	6	Screw, Hex-Crimptite #6-32 x .375"
9	03995.0000	4	Foot, Rubber - .75 OD x .44 HT
	02332.0002	4	Screw, Hex-Crimptite #6-32 x .38"
	01390.0000	4	Screw, Round Head - Phillip #8-32 x .62" — For Optional Leg Extension
	02324.0000	4	Nut, Acorn - High Crown #8-32 — For Optional Leg Extension
10	03992.0000	4	Plug, Foot-Rubber
11	02776.0000	2	Leg, Extensions - 3.5" HT (Optional)
	02332.0002	4	Screw, Hex-Crimptite #6-32 x .38"
12	12364.0000	1	Decal, Caution - warmers are hot

TRUNKS AND PANELS VPS - VPSA

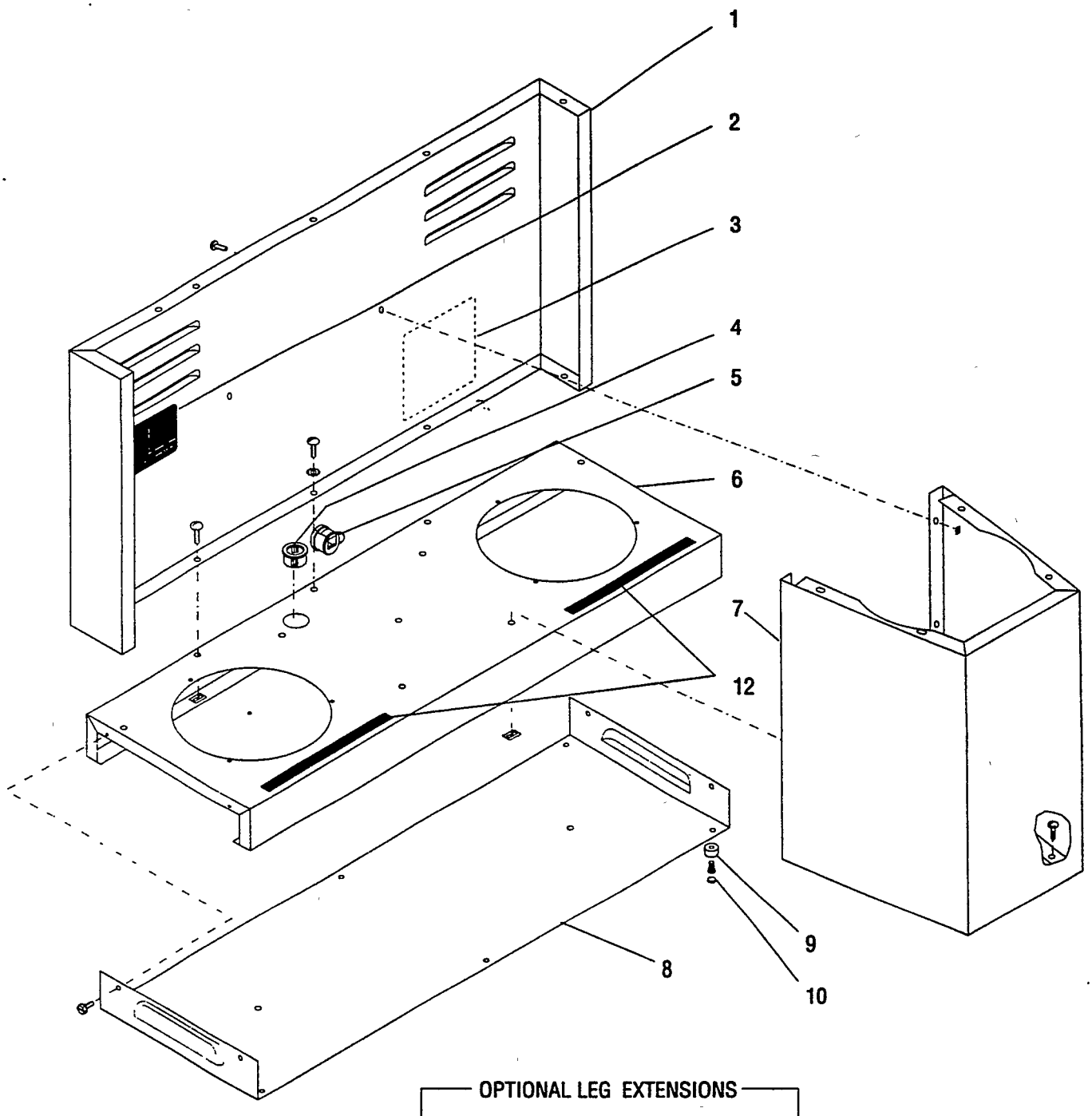

OPTIONAL LEG EXTENSIONS

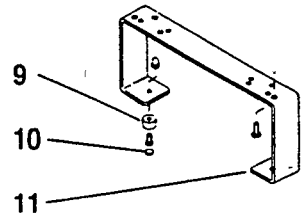

P-558

TRUNKS AND PANELS VPS - VPSA

ITEM	PART NO.	QTY.	DESCRIPTION
1	25154.0000	1	Panel W/Decals, Trunk Rear - BRN (Includes items 2 & 3)
	25154.0001	1	Panel W/Decals, Trunk Rear - BLK (Includes items 2 & 3)
	01311.0000	5	Screw, Truss Head #8-32 x .25"
	00978.0000	5	Fastener, Flat Type #8-32
	01511.0000	1	Lockwasher, Ext. Tooth #8
2	00658.0000	1	Decal, Caution - Decanter/Funnel
3	00831.0000	1	Decal, Warning-Electrical
4	01663.0000	1	Bushing, Snap - .875" Dia
5	01686.0000	1	Bushing, Strain Relief - Nylon
6	04273.0000	1	Housing, Base (VPS)
	04272.0002	1	Housing, Base (VPSA)
7	04204.0000	1	Housing, Trunk Front (WG)
	04204.0003	1	Housing, Trunk Front (BLK)
	01311.0000	6	Screw, Truss Head #8-32 x .25"
	00978.0000	6	Fastener, Flat Type #8-32
8	04203.0000	1	Cover, Base
	02332.0002	6	Screw, Hex-Crimptite #6-32 x .375"
9	03995.0000	4	Foot, Rubber - .75 OD x .44 HT
	02332.0002	4	Screw, Hex-Crimptite #6-32 x .38"
	01390.0000	4	Screw, Round Head - Phillip #8-32 x .62"] For Optional
	02324.0000	4	Nut, Acorn - High Crown (SST) #8-32] Leg Extension
10	03992.0000	4	Plug, Foot-Rubber
11	02776.0000	2	Leg, Extensions - 3.5" HT (Optional)
	02332.0002	4	Screw, Hex-Crimptite #6-32 x .38"
12	12364.0000	2	Decal, Caution - warmers are hot

(Revised December 1998)

HOOD AND TOP COVERS VPR - VPRA

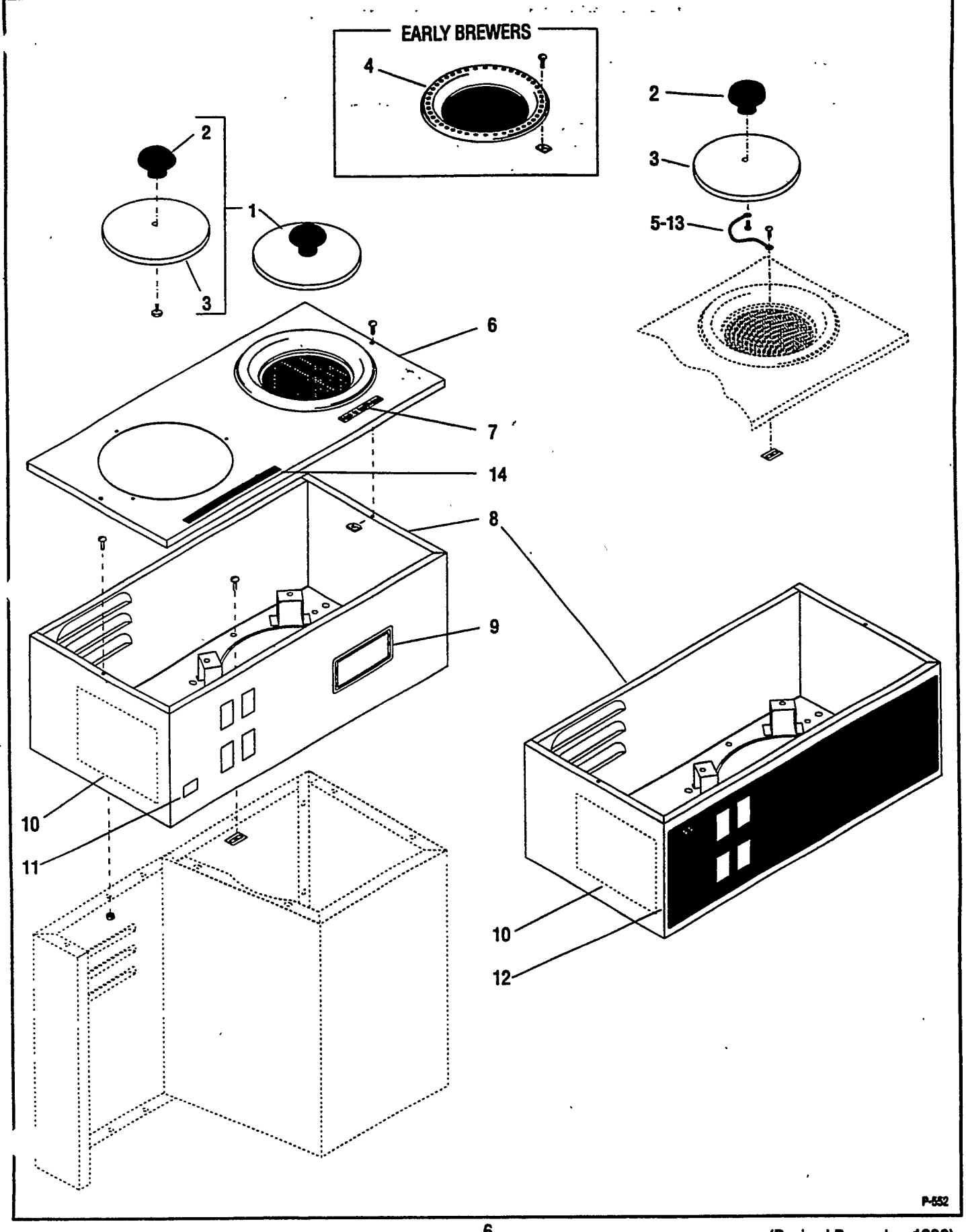

HOOD AND TOP COVERS VPR - VPRA

ITEM	PART NO.	QTY.	DESCRIPTION
1	01109.0000	1	Lid Assembly, Pour-In W/BRN Knob (Includes items 2 & 3)
	02564.0000	1	Lid Assembly, Pour-In W/BLK Knob (Includes items 2 & 3)
2	00721.0000	1	Knob, Brown Threaded
	00725.0000	1	Knob, Black Threaded
	01315.0000	1	Screw, Truss Head #8-32 x .38"
3	01192.0000	1	Cover Plate (SST)
4	02871.0000	1	Screen Assembly, Pour-In (Early Brewers)
	01303.0000	3	Screw, Pan Head #4-40 x .50"
	00916.0000	3	Fastener, J-Type #4-40
5	02793.0000	1	Chain Assembly, 6.5" LG (See Item 13)
	01318.0000	1	Screw, Round Head #8-32 x .50"
	01382.0000	1	Screw, Truss Head #6-32 x .375
	00952.0000	1	Fastener, Flat Type #6-32
6	25130.0000	1	Cover Assembly, Top W/Decal (Includes item 7)
	01303.0000	2	Screw, Pan Head #4-40 x .50"
	00916.0000	2	Fastener, J-Type #4-40
7	00833.0000	1	Decal, Pour In Water Only
8	25131.0000	1	Hood Assembly, W/Decal (VPR-WG) (Includes Items 9 &10) — Shown
	25131.0001	1	Hood Assembly, W/Decal (VPR-BLK) (Includes items 10 &12) — Shown
	25131.0002	1	Hood Assembly, W/Decal (VPRA-WG) (Includes items 9,10 &11) (Prior to 1/3/97)
	27701.0000	1	Hood Assembly, W/Decal (VPRA-WG) Includes items 9, 10 & 11) (Effective 1/3/ 97)
	25131.0003	1	Hood Assembly, W/Decal (VPRA-BLK) (Includes items 10 & 12) (Prior to 1/3/97)
	27701.0001	1	Hood Assembly, W/Decal (VPRA-BLK) (Includes items 10 & 12) (Effective 1/3/ 97)
	01311.0000	8	Screw, Truss Head #8-32 x .25"
	00978.0000	7	Fastener, Flat Type #8-32
	00908.0000	1	Nut, hex #8-32
	00970.0000	1	Nut, Keps #8-32
9	00835.0000	1	Decal, BUNN POUR-O-MATIC (WG)
10	10050.0000	1	Decal, Schematic-Electrical (120V)
	10096.0000	1	Decal, Schematic-Electrical (220/240V)
11	01906.0000	1	Decal, Power On (VPRA-WG)
12	21137.0000	1	Decal, Control Panel (VPR-BLK) (Shown)
	21137.0001	1	Decal, Control Panel (VPRA-BLK) (Prior to 1/3/97)
	27694.0000	1	Decal, Control Panel (VPRA-BLK) (Effective 1/3/ 97)
13	02794.0000	1	Chain Kit, Pour-in Lid (Includes item 5 and attaching hardware)
14	12364.0000	1	Decal, Caution - warmers are hot

HOOD AND TOP COVERS VPS - VPSA

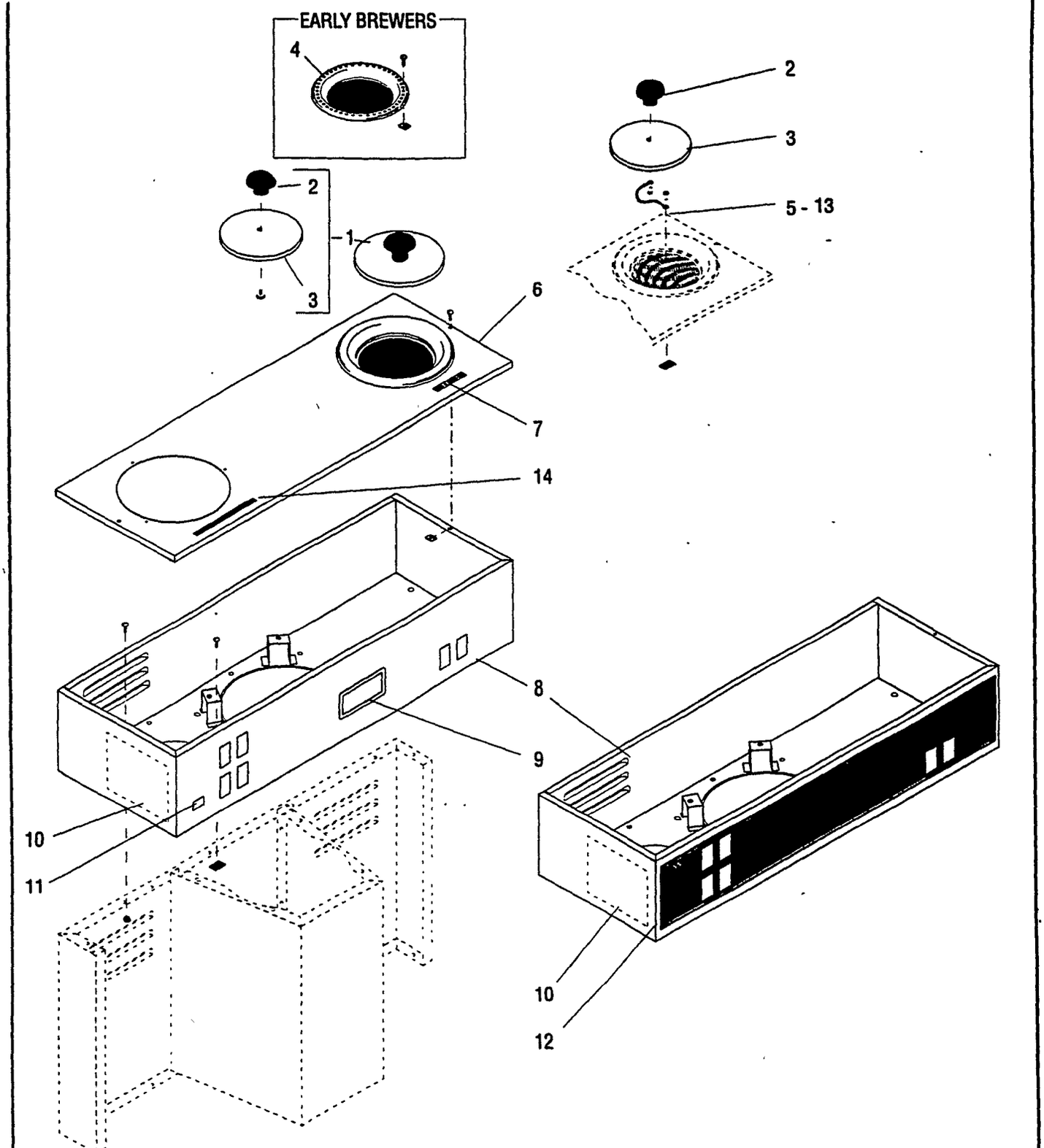

P-559

HOOD AND TOP COVERS VPS - VPSA

ITEM	PART NO.	QTY.	DESCRIPTION
1	01109.0000	1	Lid Assembly, Pour-In W/BRN Knob (Includes items 2 & 3)
	02564.0000	1	Lid Assembly, Pour-In W/BLK Knob (Includes items 2 & 3)
2	00721.0000	1	Knob, Brown Threaded
	00725.0000	1	Knob, Black Threaded
	01315.0000	1	Screw, Truss Head #8-32 x .38"
3	01192.0000	1	Cover Plate (SST)
4	02871.0000	1	Screen Assembly, Pour-In (Early Brewers)
	01303.0000	3	Screw, Pan Head #4-40 x .50"
	00916.0000	3	Fastener, J-Type #4-40
5	02793.0000	1	Chain Assembly, 6.5" LG (See Item 13)
	01318.0000	1	Screw, Round Head #8-32 x .50"
	01382.0000	1	Screw, Truss Head #6-32 x .375
	00952.0000	1	Fastener, Flat Type #6-32
6	25155.0000	1	Cover Assembly, Top W/Decal (Includes item 7)
	01303.0000	2	Screw, Pan Head #4-40 x .50"
	00916.0000	2	Fastener, J-Type #4-40
7	00833.0000	1	Decal, Pour In Water Only
8	25156.0000	1	Hood Assembly, W/Decal (VPS-WG) (Includes Items 9 &10) — Shown
	25156.0001	1	Hood Assembly, W/Decal (VPS-BLK) (Includes items 10 &12) — Shown
	25156.0002	1	Hood Assembly, W/Decal (VPSA-WG) (Includes items 9,10 &11) (Prior to 1/3/97)
	27702.0000	1	Hood Assembly, W/Decal (VPSA-WG) (Includes items 9,10 &11) (Effective 1/3/ 97)
	25156.0003	1	Hood Assembly, W/Decal (VPSA-BLK) (Includes items 10 & 12) (Prior to 1/3/97)
	27702.0001	1	Hood Assembly, W/Decal (VPSA-BLK) (Includes items 10 & 12) (Effective 1/3/ 97)
	01311.0000	9	Screw, Truss Head #8-32 x .25"
	00978.0000	8	Fastener, Flat Type #8-32
	00908.0000	1	Nut, hex #8-32
	00970.0000	1	Nut, Keps #8-32
9	00835.0000	1	Decal, BUNN POUR-O-MATIC (WG)
10	10049.0000	1	Decal, Schematic-Electrical (120V)
	10095.0000	1	Decal, Schematic-Electrical (220/240V)
11	01906.0000	1	Decal, Power On (VPSA-WG)
12	21138.0000	1	Decal, Control Panel (VPS-BLK) (Shown)
	21138.0001	1	Decal, Control Panel (VPSA-BLK) (Prior to 1/3/97)
	27695.0000	1	Decal, Control Panel (VPSA-BLK) (Effective 1/3/ 97)
13	02794.0000	1	Chain Kit, Pour-in Lid (Includes item 5 and attaching hardware)
14	12364.0002	1	Decal, Caution - warmers are hot

FILL BASIN

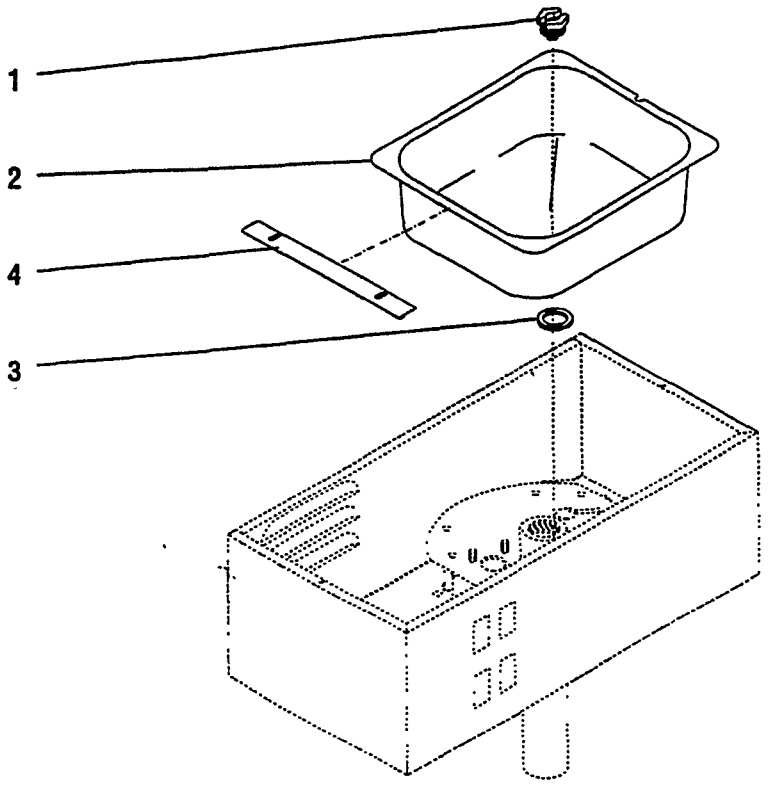

VPR-VPRA

P-553

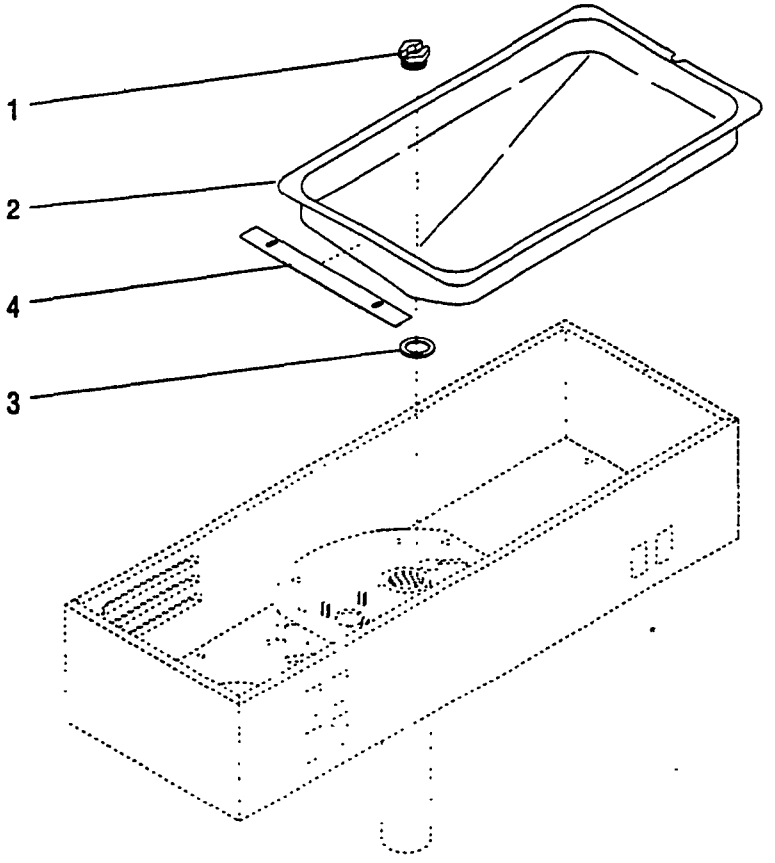

VPS - VPSA

P-560

FILL BASIN

ITEM	PART NO.	QTY. *	QTY. **	DESCRIPTION
				* VPR - VPRA ** VPS - VPSA
1	01212.0000	1	1	Fitting, Tank Inlet
2	06220.0000	1	-	Fill Basin (SST)
	04270.0000	-	1	Fill Basin (SST)
3	01201.0000	1	1	Gasket, Tank Inlet
4	11424.0000	1	1	Plate, Splash Guard

TANK AND COMPONENTS

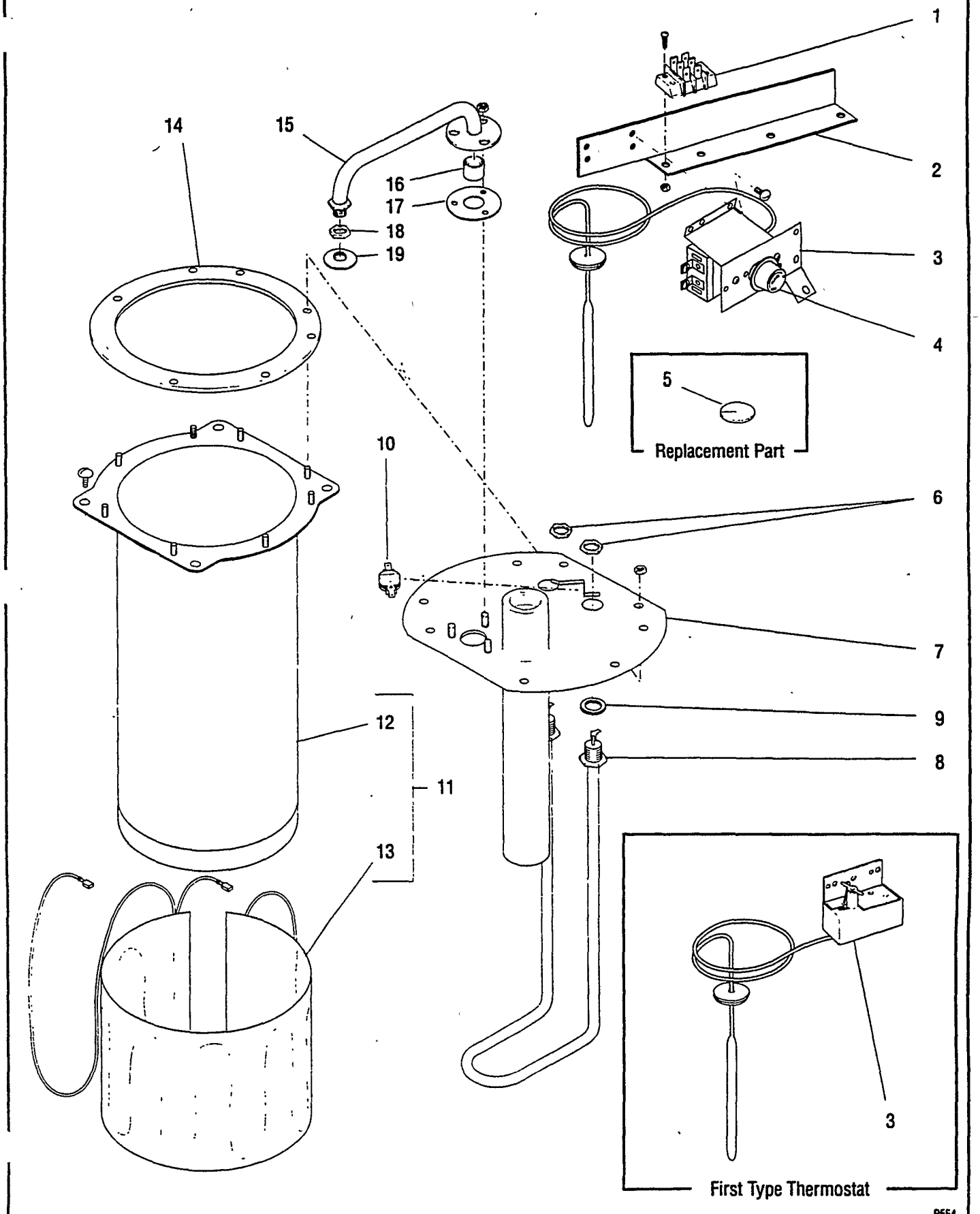

TANK AND COMPONENTS

ITEM	PART NO.	QTY.	DESCRIPTION
-	05697.0006	1	Tank Assembly, 1320W 120V (Includes items 1 thru 17 & 20 thru 23)
	--------	1	Tank Assembly, 1850W 220V (Includes items 1 thru 9, 11 thru 17, 20 thru 22 & 24) (Prior to 1/3/97 on "A" models only. Order new model Tank Assembly)
	27706.0000	1	Tank Assembly, 1850W 220V (Includes items 1 thru 9, 11 thru 17, 20 thru 22 & 24) (Effective 1/3/97 on "A" models only)
	01315.0000	2	Screw, Truss Head (SST) 8-32 x .38"
1	04309.0000	1	Terminal Block
	01338.0000	2	Screw, Truss Head (SST) 8-32 x .62"
	00970.0000	2	Nut, Keps 8-32
2	04307.0000	1	Bracket Assembly, Thermostat/Terminal Block Mounting
3	28319.0000	1	Thermostat Kit (Includes items 4 & 5) (Also replaces First Type Thermostat)
	01311.0000	2	Screw, Truss Head (SST) 8-32 x .25"
	20762.0000	2	Screw, Binding Head 8-32 x .25" (Terminal Screws)
4	00720.0000	1	Knob, Thermostat
5	07073.0000	1	Grommet, Thermostat
6	00942.0000	2	Nut, Hex - Brass .50"-20
7	05545.0000	1	Tank Lid Assembly
	00908.0000	8	Nut, Hex 8-32
8	04236.1000	1	Tank Heater Kit 1320W 120V (Includes item 9)
	01925.1000	1	Tank Heater Kit 1850W 220V (Includes item 9)
9	00943.0000	2	Gasket, Tank Heater
10	04680.0000	1	Thermostat, Limit (Not used on "A" Models)
11	04119.0001	1	Tank W/Blanket Warmer 120V (Includes items 12 & 13)
	04133.0000	1	Tank W/Blanket Warmer 220V (Includes items 12 & 13)
12	04118.0000	1	Tank
13	20264.0000	1	Blanket Warmer, 55W 120V
	01927.0000	1	Blanket Warmer, 50W 220V
14	04221.0000	1	Gasket, Tank Lid
15	05555.0002	1	Sprayhead Tube Kit (Includes 3 mounting nuts below, items 16 & 17)
	00908.0000	3	Nut, Hex 8-32
16	05518.0000	1	Hub, Syphon
17	05515.0000	1	Gasket, Sprayhead Tube
18	01075.0000	1	Nut, Hex .438"-20
19	01082.0000	1	Sprayhead, 6-Hole
	01082.0005	1	Sprayhead, 5-Hole (Optional)
	01082.0006	1	Sprayhead, 1-Hole (Optional-Pouch Pack)
	Note: The following items are not illustated		
20	21016.0005	1	Lead, Elec - Wht 12" Terminal Block to Heater (VPR-VPS)
	21016.0049	1	Lead, Elec - Red 12" Terminal Block to Heater (VPRA-VPSA)

(Continued)

TANK AND COMPONENTS

(Continued)

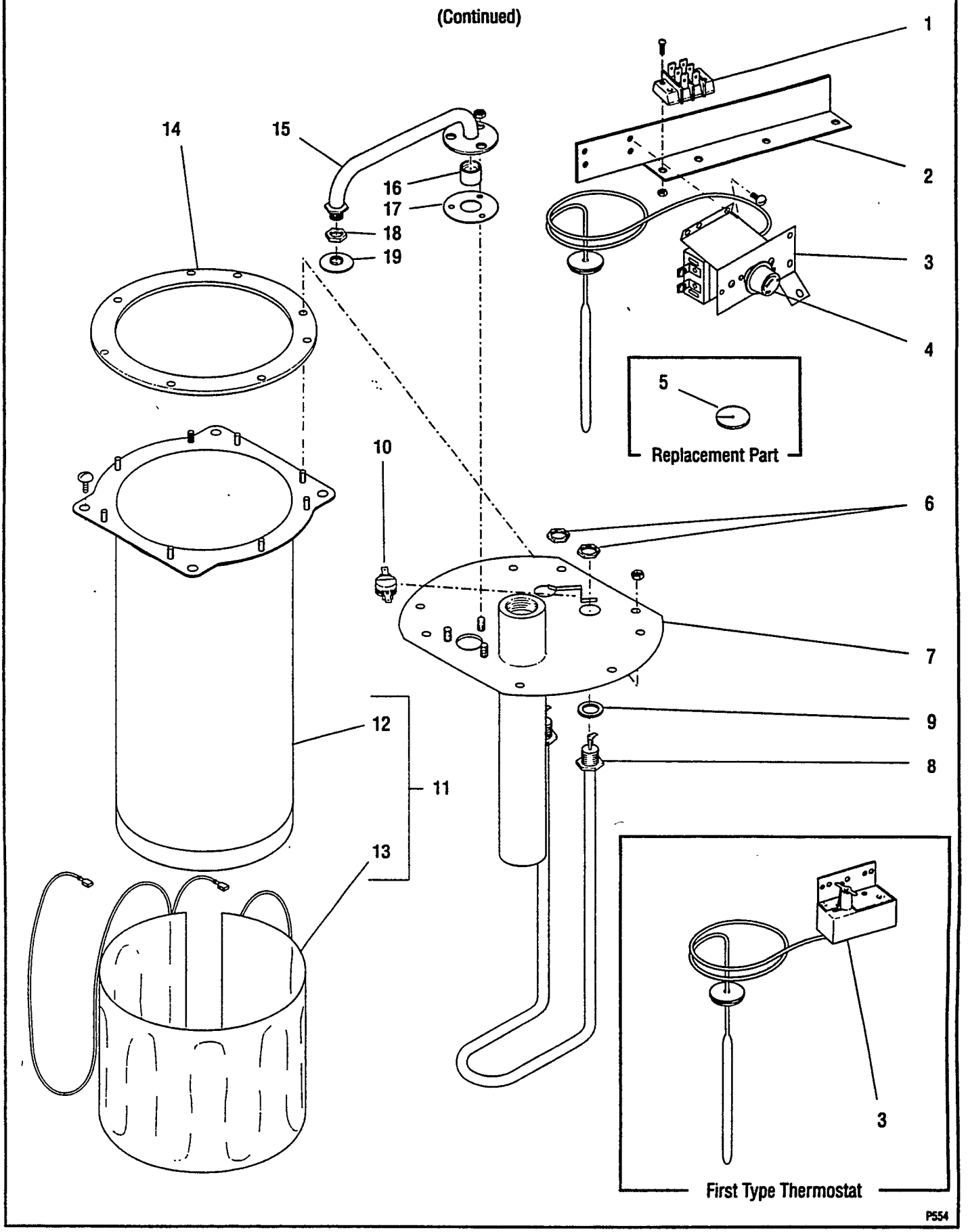

TANK AND COMPONENTS

ITEM	PART NO.	QTY.	DESCRIPTION
21	21016.0006	1	Lead, Elec - Blk 10" Terminal Block to Control Thermostat (VPR-VPS also VPRA-VPSA prior to 1/3/97)
	21016.0244	1	Lead, Elec - Blk 10" Terminal Block to Control Thermostat (VPRA-VPSA Effective 1/3/97)
22	21016.0007	1	Lead, Elec - Blu/Blk 23" Control Thermo to Limit Thermostat(VPR-VPS also VPRA-VPSA prior to 1/3/97)
	21016.0029	1	Lead, Elec - Blu/Blk 23" Control Thermo to Limit Thermostat (VPRA-VPSA Effective 1/3/97)
23	21016.0008	1	Lead, Elec - Blk 4" Limit Thermo to Tank Heater (VPR-VPS only)
24	04776.0000	2	Thermal Cut-Off W/Lead Assembly (VPRA-VPSA only)

(Continued)

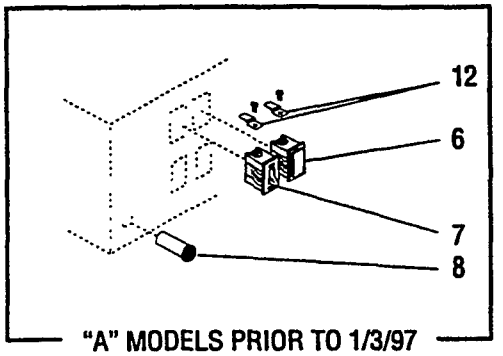

"A" MODELS PRIOR TO 1/3/97

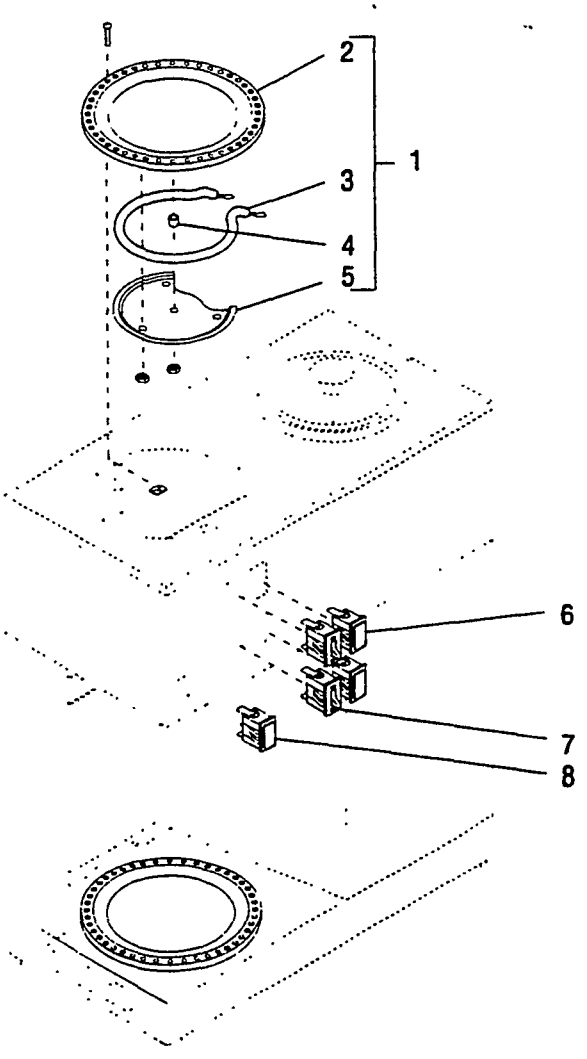

VPR - VPRA

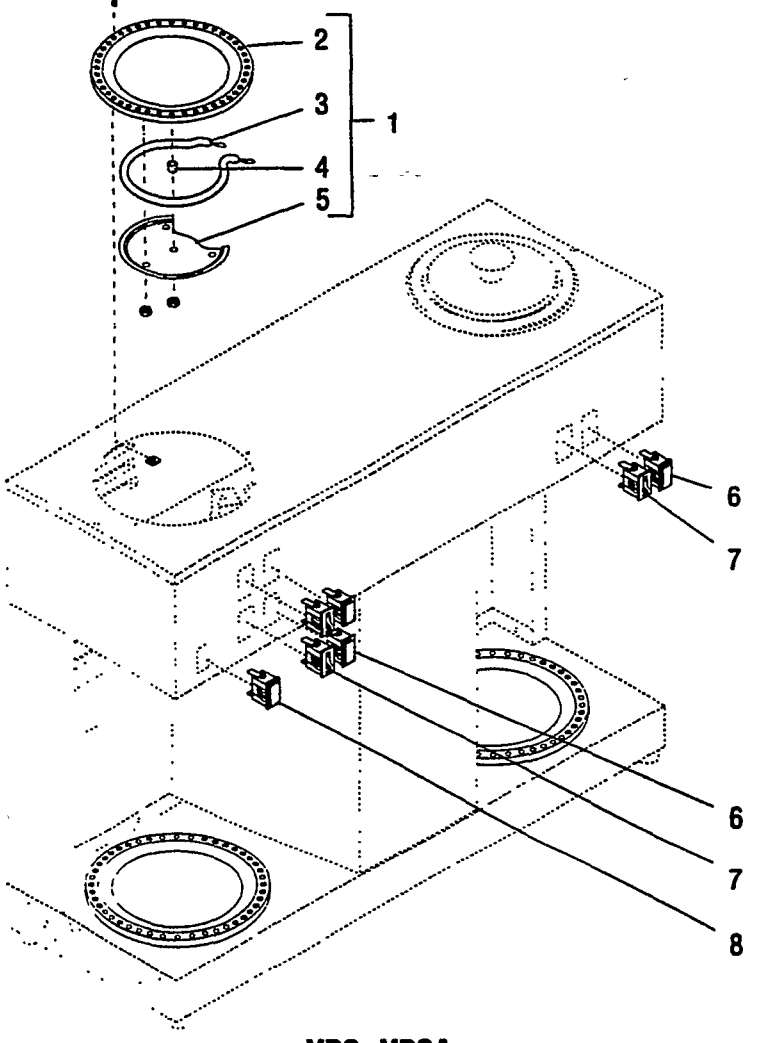

VPS -VPSA

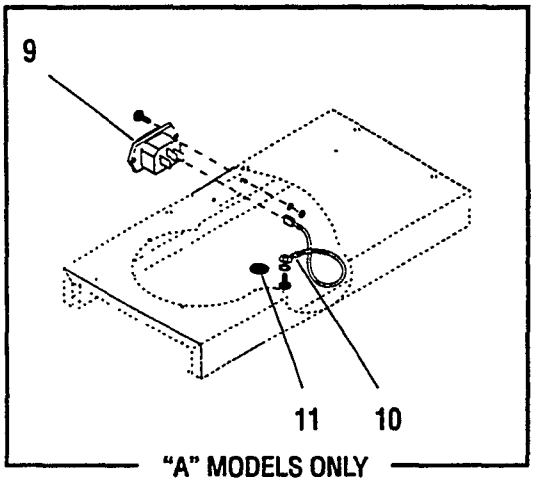

"A" MODELS ONLY

P555

P561

(Revised December 1996)

ELECTRICAL AND OPERATING CONTROLS

ITEM	PART NO.	QTY. *	QTY. **	DESCRIPTION
				* VPR - VPRA ** VPS - VPSA
1	03625.0000	2	3	Warmer Assembly, Brn 100W 120V
	03652.0000	2	3	Warmer Assembly, Blk 100W 120V
	01973.0000	2	3	Warmer Assembly, Brn 100W 220V
	02817.0000	2	3	Warmer Assembly, Blk 100W 220V
	01303.0000	6	9	Screw, Pan Head #4-40 x .50"
	00916.0000	6	9	Fastener, J-Type
2	03655.0000	1	1	Warmer Dish, Brn
	03656.0000	1	1	Warmer Dish, Blk
3	01227.0000	1	1	Warmer Element, 100W 120V (Shown)
	01951.0000	1	1	Warmer Element, 100W 220V (Not illustrated)
4	13042.0001	1	1	Spacer, .174" I.D. .188" (120V Warmers only)
5	05212.0000	1	1	Plate, Warmer Retainer
	00970.0000	2	2	Nut, Keps #8-32
6	04226.0000	2	3	Lamp, Brn 125V
	04226.0002	2	3	Lamp, Blk 125V
	01089.0001	2	3	Lamp, Blk 240V (Prior to 1/3/97 on "A" models only)
	27691.0000	2	3	Lamp, Blk 240V (Effective 1/3/97 on "A" models only)
7	04225.0000	2	3	Switch, On/Off Toggle - Brn
	04225.0002	2	3	Switch, On/Off Toggle - Blk
	01186.0000	2	3	Switch, On/Off Toggle (Prior to 1/3/97)
	27689.0000	2	3	Switch, On/Off Toggle (Effective 1/3/97)
8	01905.0000	1	1	Lamp, Power-On 220V (Prior to 1/3/97)
	27691.0000	1	1	Lamp, Power-On 220V (Effective 1/3/97)
9	01908.0000	1	1	Power Connector, 10A 250V
	01362.0000	2	2	Screw, Oval Head #4-40 x .50"
	01509.0000	2	2	Lockwasher, External Tooth, # 4
	00937.0000	2	2	Nut, Hex #4-40
10	21016.0013	1	1	Lead, Ground Grn/Yel
	01375.0000	1	1	Pan Head (Brass) #10-32 x .50"
	01512.0000	1	1	Lockwasher, External Tooth #10
11	00824.0000	1	1	Decal, Ground
12	01667.0000	12	12	Terminal, .25"
	Note: The following items are not illustrated			
13	21016.0011	1	1	Lead, Ground - Grn/Yel (Upper Warmer)
	21016.0012	1	2	Lead, Ground - Grn/Yel (Lower Warmer)
14	01637.0000	1	1	Cord Assembly, Power (VPR, VPS)
	01311.0000	1	1	Screw, Truss Head #8-32 x .25"
	01511.0000	1	1	Lockwasher, External Tooth #8
	00970.0000	1	1	Nut, Keps #8-32
	01716.0000	1	1	Cord Assembly, Power (VPRA, VPSA)

Includes Items 2 thru 5

"A" models only

(Continued)

ELECTRICAL AND OPERATING CONTROLS

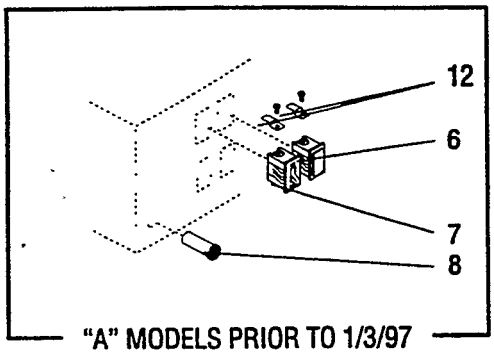

"A" MODELS PRIOR TO 1/3/97

(Continued)

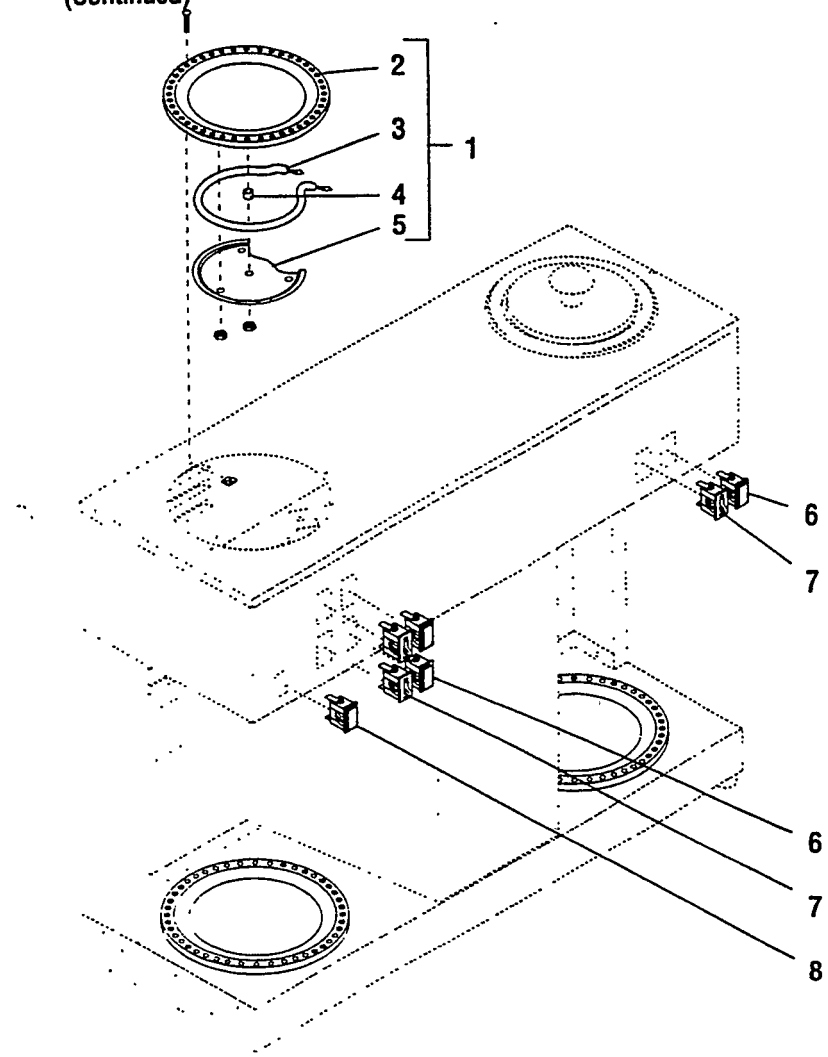

VPS -VPSA

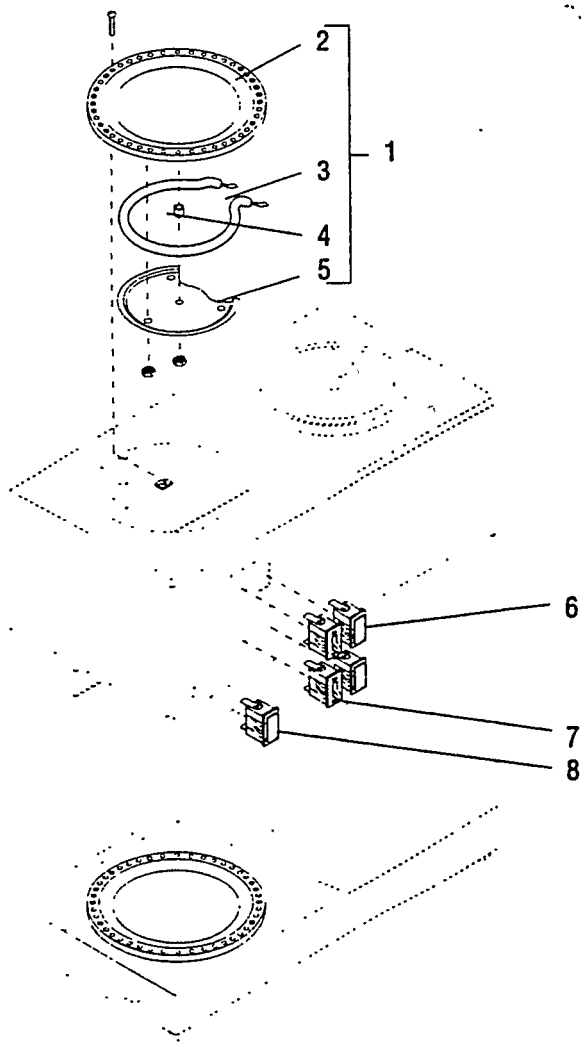

VPR - VPRA

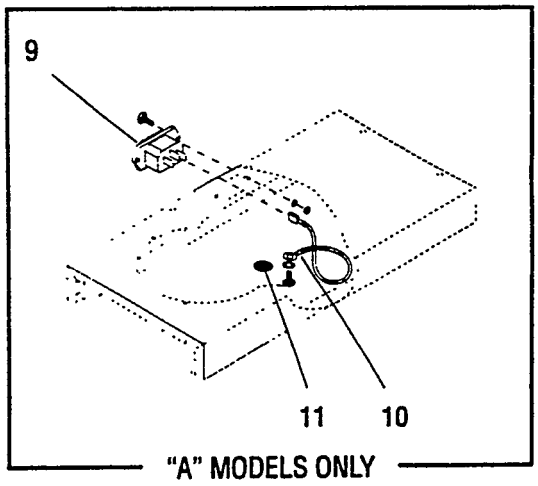

"A" MODELS ONLY

P555

P561

ELECTRICAL AND OPERATING CONTROLS

ITEM	PART NO.	QTY.		DESCRIPTION
15	01854.0000	1	-	Wiring Harness, 120V (VPR)
	01898.0000	-	1	Wiring Harness, 120V (VPS)
	01901.0000	1	-	Wiring Harness, 240V (VPRA)
	01899.0000	-	1	Wiring Harness, 240V (VPSA)
16	21000.0031	1	1	Lead, Elec - Blk 7.5" (Power Light to Top Warmer Switch) (Prior to 1/3/97 on "A" models only)
	21000.0061	1	1	Lead, Elec - Blk 7.5" (Power Light to Top Warmer Switch) (Effective 1/3/97 on "A" models only)
17	21005.0016	1	1	Lead, Elec - Red/Blk 8.5" (Power Light to Top Warmer Light) (Prior to 1/3/97 on "A" models only)
	21003.0066	1	1	Lead, Elec - Red 8.5" (Power Light to Top Warmer Light) (Effective 1/3/97 on "A" models only)

(Added December 1996)

FUNNELS, PITCHER AND FILTER BASKET

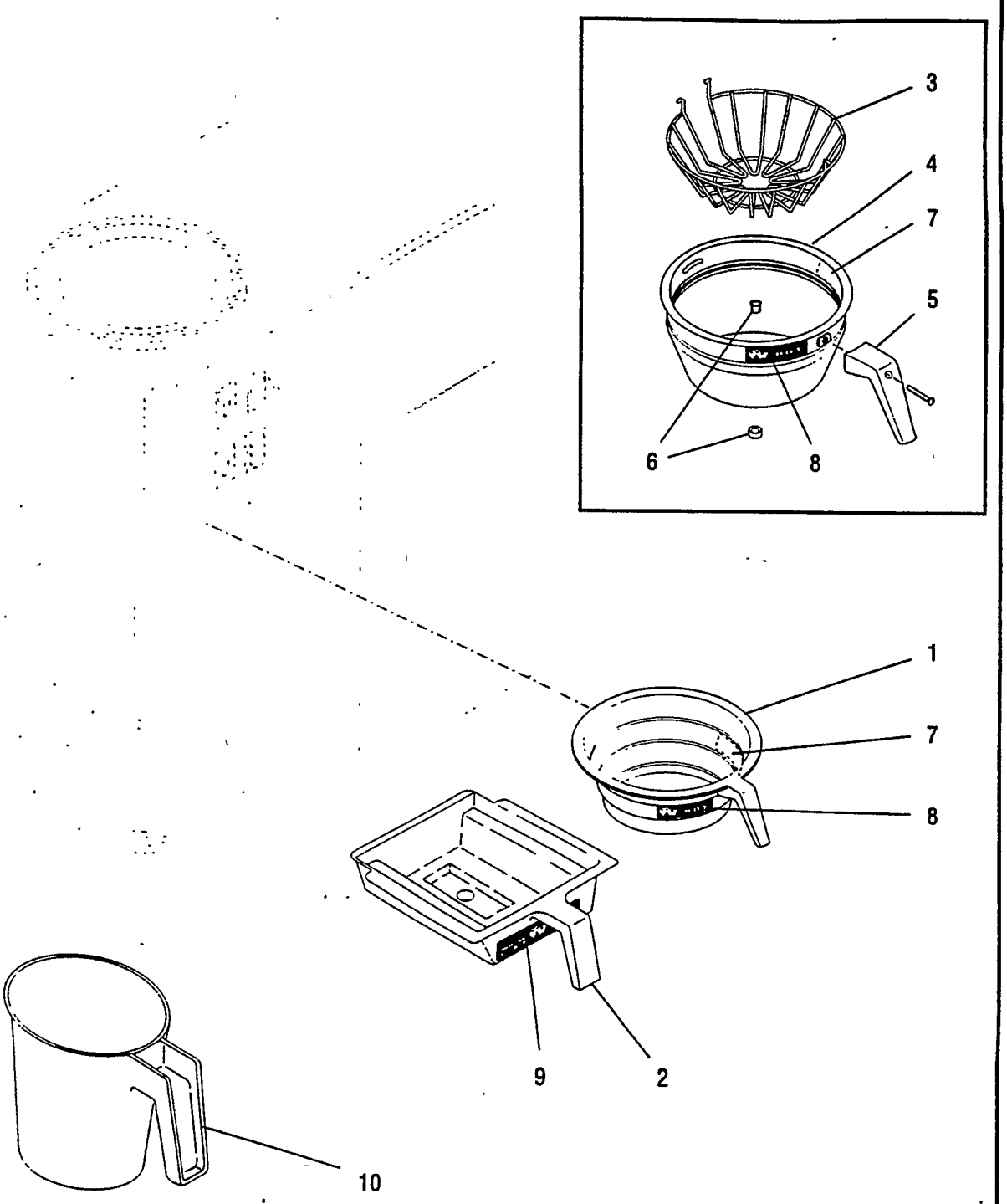

P556.70

FUNNELS, PITCHER AND FILTER BASKET

ITEM	PART NO.	QTY.	DESCRIPTION
1	20583.0003	1	Funnel W/Decals, Plastic - Blk — Includes items 7 & 8
	20583.0004	1	Funnel W/Decals, Plastic - Brn — Includes items 7 & 8
	20583.0006	1	Funnel W/Decals, Plastic - Orn — Includes items 7 & 8
	20216.0000	1	Funnel, SST W/Black Handle (7.125" Dia.) (Includes Items 3 thru 8)
	20216.0001	1	Funnel, SST W/Orange Handle (7.125" Dia.) (Includes items 3 thru 8)
2	02774.0010	1	Funnel W/Decals, Pouch Pack - Brn (Small) — Includes item 9
	02774.0011	1	Funnel W/Decals, Pouch Pack - Blk (Small) — Includes item 9
	04274.0010	1	Funnel W/Decals, Pouch Pack - Brn (Large) — Includes item 9
	04274.0012	1	Funnel W/Decals, Pouch Pack - Blk (Large) — Includes item 9
3	20243.0000	1	Filter Basket
4	28553.0000	1	Funnel, SST (Includes items 7 & 8)
5	20244.1000	1	Handle, Black — Includes Screw
	20244.1001	1	Handle, Orange — Includes Screw
	01331.0002	1	Screw, Round Head 10-32 x 1.50"
6	01031.0000	1	Funnel Tip Kit
7	03408.0002	1	Decal, Warning-Remove Funnel
8	03409.0002	1	Decal, Warning-Hot Liquid
9	28694.0000	1	Decal, Warning-Hot Liquid/Remove Funnel
10	04238.0000	1	Pitcher, 64 oz - Plastic

GALLEY KIT

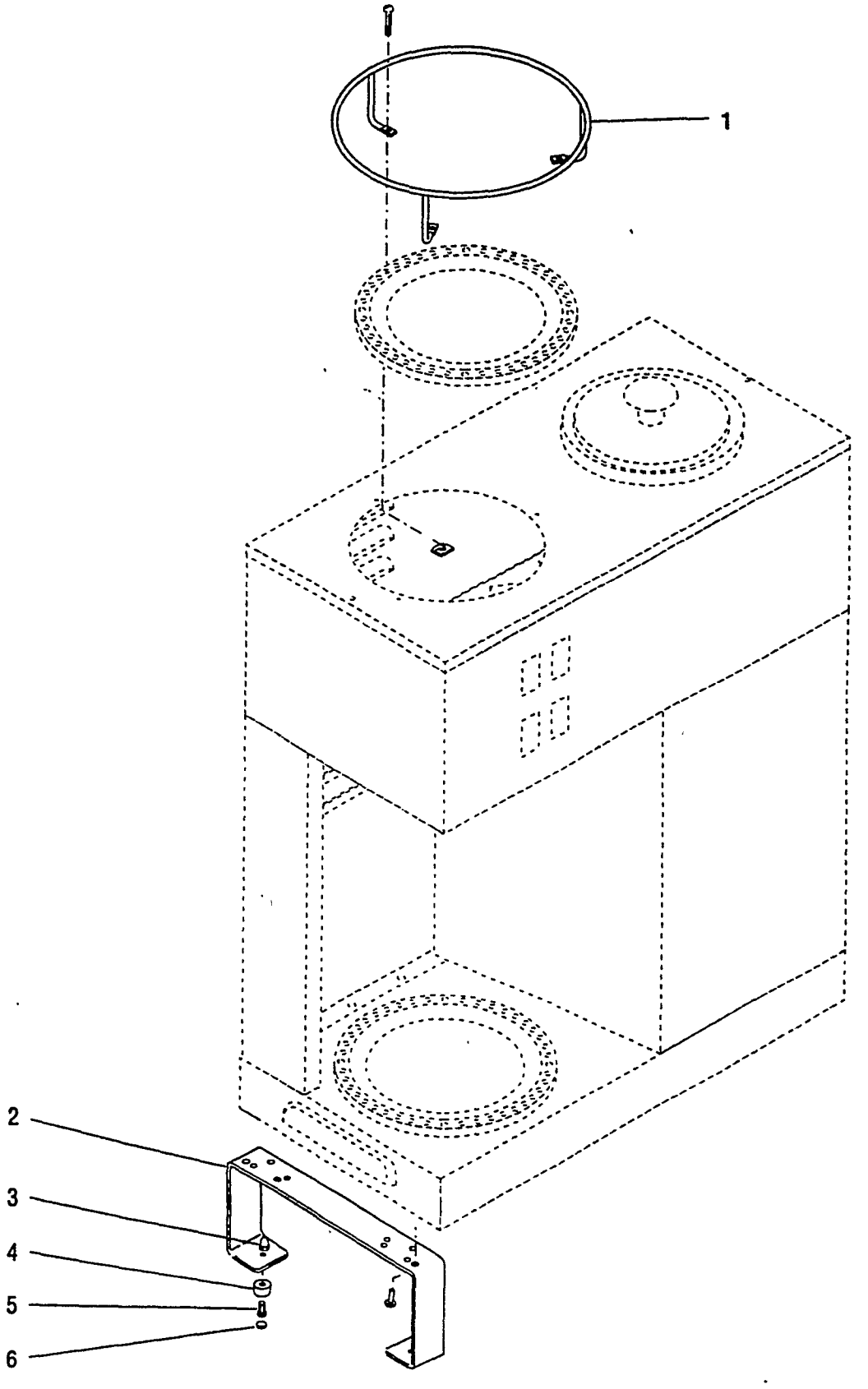

P-557

GALLEY KIT

ITEM	PART NO.	QTY.	DESCRIPTION
-	24783.0000	1	Galley Kit (Includes items 1, 2, 3 & 5)(VPR-VPRA)
-	24783.0001	1	Galley Kit (Includes items 1, 2, 3 & 5)(VPS-VPSA)
1	24730.0000	2	Galley Rail, SST (One Additional Used On VPS and VPSA Brewers)
	01303.0000	3	Screw, Pan Head (SST) 4-40 x .50"
	00916.0000	3	Fastener, J-Type (SST) 4-40
2	02776.0000	2	Leg, Extension - 3.50HT
	02332.0002	4	Screw, Hex-Crimptite 6-32 x .38"
3	02324.0000	4	Nut, Acorn (SST) 8-32
4	03995.0000	4	Foot, Rubber
5	01390.0000	4	Screw, Round Head - Phillip (SST) 8-32 x .62"
6	03992.0000	4	Plug, Foot

NUMERICAL INDEX

PART NO.	PAGE NO.
00658.0000	3,5
00720.0000	13
00721.0000	7,9
00725.0000	7,9
00824.0000	15
00831.0000	3,5
00833.0000	7,9
00835.0000	7,9
00908.0000	7,9,13
00916.0000	7,9,15,19
00937.0000	15
00942.0000	13
00943.0000	13
00952.0000	7,9
00970.0000	7,9,13,15
00978.0000	3,5,7,9
01031.0000	17
01075.0000	13
01082.0000	13
01082.0005	13
01082.0006	13
01089.0000	15
01109.0000	7,9
01186.0000	15
01192.0000	7,9
01212.0000	11
01201.0000	11
01227.0000	15
01303.0000	7,9,15,19
01311.0000	3,5,7,9,13,15
01315.0000	7,9,13
01318.0000	7,9
01331.0002	17
01338.0000	13
01362.0000	15
01375.0000	15
01382.0000	7.9
01390.0000	3,5,19
01509.0000	15
01511.0000	3,5,15
01512.0000	15
01637.0000	15
01663.0000	3,5
01686.0000	3,5
01716.0000	15
01854.0000	15B
01898.0000	15B
01899.0000	15B
01901.0000	15B
01905.0000	15
01906.0000	7,9
01908.0000	15
01925.1000	13
01927.0000	13
01951.0000	15
01973.0000	15
02324.0000	3,5,19
02332.0001	3,5
02332.0002	3,5,19
02564.0000	7
02564.0000	9
02774.0010	17
02774.0011	17
02776.0000	3,5,19
02793.0000	7,9
02794.0000	7,9
02817.0000	15
02871.0000	7,9
03408.0002	17
03409.0002	17
03625.0000	15
03652.0000	15
03655.0000	15
03656.0000	15
03992.0000	3,5,19
03995.0000	3,5,19
04118.0000	13
04119.0001	13
04133.0000	13
04203.0000	5
04204.0000	5
04204.0003	5
04221.0000	13
04225.0000	15
04225.0002	15
04226.0000	15
04226.0002	15
04227.1001	13
04236.1000	13
04238.0000	17
04270.0000	11
04272.0002	5
04273.0000	5
04274.0010	17
04274.0012	17
04307.0000	13
04309.0000	13
04680.0000	13
04776.0000	13B
05212.0000	15
05515.0000	13
05518.0000	13
05545.0000	13
05555.0002	13
05697.0006	13
06201.0002	3
06202.0000	3
06203.0000	3
06204.0000	3
06204.0003	3
06220.0000	11
07073.0000	13
10049.0000	9
10050.0000	7
10095.0000	9
10096.0000	7
11424.0000	11
12364.0000	3,5,7
13042.0001	15
20216.0000	17
20216.0001	17
20243.0000	17
20244.1000	17
20244.1001	17
20264.0000	13
20583.0003	17
20583.0004	17
20583.0006	17
20762.0000	13
21000.0031	15B
21000.0061	15B
21005.0016	15B
21005.0739	15B
21016.0005	13
21016.0006	13B
21016.0007	13B
21016.0008	13B
21016.0011	15
21016.0012	15
21016.0013	15
21016.0029	13B
21016.0049	13
21016.0244	13B
21137.0000	7
21137.0001	7
21138.0000	9
21138.0001	9
24730.0000	19
24783.0000	19
24783.0001	19
25130.0000	7
25131.0000	7
25131.0001	7
25131.0002	7
25131.0003	7
25132.0000	3
25132.0001	3
25154.0000	5
25154.0001	5
25155.0000	9
25156.0000	9
25156.0001	9
25156.0002	9
25156.0003	9
27689.0000	15
27691.0000	15
27694.0000	7
27695.0000	9
27701.0000	7
27701.0001	7
27702.0000	9
27702.0001	9
27706.0000	13
28319.0000	13
28553.0000	17
28694.0000	17

(Revised December 1998)

BUNN®

Coffee Decanters and Warmers

Features

EasyPour® Coffee Decanters

- Container and handle core are clear, high-impact-resistant material–all molded as sturdy, extra-strength, one-piece construction for longest life.
- Base is high quality stainless steel.
- Full 64 ounce capacity.
- Drip-proof, fast-pour lip–an exclusive Bunn-O-Matic design to assure convenient serving. Fast, clean pouring from front or either side.
- Designed to hold coffee at proper temperature–keeps coffee fresher, longer.
- Approved by NSF for potable water applications.

Regular and Decaf 64 oz. EasyPour® Decanters

Regular and Decaf 64 Oz. Glass Decanters

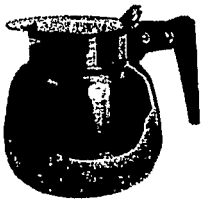

Stainless Steel 64 oz. Decanter

BCD 48 oz. Decanter

ITEM#

PROJECT

DATE

Model

Decanters
EasyPour®
Glass
Stainless Steel
Warmers
WS2, WL2, WX1, WX2, BCW

Related Products

For available variations to some BUNN products, please contact your BUNN sales representative.

WS2-Warmer with auxilary outlet
Product No.: 12882.0004
6" H x 7½" W x 17⅘" D
Two position warmer for S, ST & STF brewers.

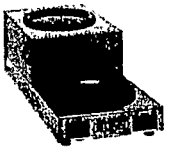

WL2-Low profile warmer
Product No.: 11402.0001
5⅕" H x 8" W x 18" D
Two position warmer for C, CW, VP17, etc. brewers.

WX1-warmer
Product No.: 06450.0004
2½" H x 6½" W x 7" D
One position warmer

WX2-warmer
Product No.: 06310.0004
2½" H x 14" W x 7" D
Two position warmer

BCW-Auxiliary warmer
Product No.: 04875.0001
One position warmer for home use.

BUNN®

Corporate Offices
1400 Stevenson Drive
Springfield, Illinois 62703
Phone
800-637-8606
217-529-6601
Fax
217-529-6644
Technical Services
800-286-6070
Internet
http://www.bunnomatic.com

Western Regional Office
16431 Carmenita Road,
Cerritos, California 90701
Phone
562-926-0764
Fax
562-926-0858

In Canada
280 Industrial Parkway South
Aurora, Ontario, L46 3T9
Phone
905-841-2866
Fax
905-841-2775

Patents Apply

BUNN® practices continuous product research and improvement. We reserve the right to change specifications and product design without notice. Such revisions do not entitle the buyer to corresponding changes, improvements, additions or replacements for previously purchased equipment.

BUNN® *The Mark of Quality in Beverage Equipment Worldwide*

Dimensions & Specifications

Model	Product #	Cu. Ft.	Shipping Weight
EasyPour® black handle, 1 per case	06100.0101	.3	1.0 lb. (0.5 kg)
EasyPour® black handle, 2 per case	06100.0102	.6	2.0 lbs. (0.9 kg)
EasyPour® black handle, 3 per case	06100.0103	.8	3.0 lbs. (1.4 kg)
EasyPour® black handle, 6 per case	06100.0106	1.5	7.0 lbs. (3.2 kg)
EasyPour® black handle, 12 per case	06100.0112	3.0	12.0 lbs. (5.5 kg)
EasyPour® black handle, 24 per case	06100.0124	6.1	24.0 lbs. (10.9 kg)
EasyPour® black handle, 6 each, 1 per case	06100.0156	1.8	8.0 lbs. (3.6 kg)
EasyPour® orange handle, 1 per case	06101.0101	.3	1.0 lb. (0.5 kg)
EasyPour® orange handle, 2 per case	06101.0102	.6	2.0 lbs. (0.9 kg)
EasyPour® orange handle, 3 per case	06101.0103	.8	3.0 lbs. (1.4 kg)
EasyPour® orange handle, 6 per case	06101.0106	1.5	7.0 lbs. (3.2 kg)
EasyPour® orange handle, 12 per case	06101.0112	3.0	12.0 lbs. (5.5 kg)
EasyPour® orange handle, 24 per case	06101.0124	6.1	24.0 lbs. (10.9 kg)

Private label EasyPour® decanters are available; call your BUNN Sales Representative for information.

Decanter, glass - black handle, 64 oz., 1 per pack	06078.0001	0.2	1.0 lb. (0.5 kg)
Decanter, glass - black handle, 64 oz., 2 per pack	06078.0002	0.5	2.0 lbs. (0.9 kg)
Decanter, glass - black handle, 64 oz., 3 per pack	06078.0003	0.8	4.0 lbs. (1.8 kg)
Decanter, glass - black handle, 64 oz., 6 per pack	06078.0006	1.5	7.0 lbs. (3.2 kg)
Decanter, glass - black handle, 64 oz., 12 per pack	06078.0012	3.0	14.0 lbs. (6.4 kg)
Decanter, glass - black handle, 64 oz., 24 per pack	06078.0024	5.4	26.0 lbs. (11.8 kg)
Decanter, glass - orange handle, 64 oz., 1 per pack	06088.0001	0.2	1.0 lb. (0.5 kg)
Decanter, glass - orange handle, 64 oz., 2 per pack	06088.0002	0.5	2.0 lbs. (0.9 kg)
Decanter, glass - orange handle, 64 oz., 3 per pack	06088.0003	0.8	4.0 lbs. (1.8 kg)
Decanter, glass - orange handle, 64 oz., 6 per pack	06088.0006	1.5	7.0 lbs. (3.2 kg)
Decanter, glass - orange handle, 64 oz., 12 per pack	06088.0012	3.0	14.0 lbs. (6.4 kg)
Decanter, glass - orange handle, 64 oz., 24 per pack	06088.0024	5.4	26.0 lbs. (11.8 kg)
Decanter, stainless steel, black handle, 64 oz.	06026.0000	0.2	1.0 lb. (0.5 kg)
Decanter, stainless steel, orange handle, 64 oz., decaf	06041.0000	0.2	1.0 lb. (0.5 kg)
Decanter, glass - black handle, 48 oz., 1 per pack	04235.0001	0.2	1.0 lb. (0.5 kg)
Decanter, glass - black handle, 48 oz., 2 per pack	04235.0002	0.6	3.0 lbs. (1.4 kg)
Decanter, glass - black handle, 48 oz., 3 per pack	04235.0003	0.8	4.0 lbs. (1.8 kg)
Decanter, glass - black handle, 48 oz., 6 per pack	04235.0006	1.2	8.0 lbs. (3.6 kg)
Decanter, glass - black handle, 48 oz., 12 per pack	04235.0012	2.3	15.0 lbs. (6.8 kg)
Decanter, glass - black handle, 48 oz., 18 per pack	04235.0018	3.3	19.0 lbs. (8.6 kg)

All dimensions shown in inches.

(Insert Classification of Publication Here) CLASSIFICATION:
Ref: NAVSEAINST 4160.3A NAVSEA S0005AA-PRO-010/TMMP

NAVSEA/SPAWAR TECHNICAL MANUAL DEFICIENCY/EVALUATION REPORT (TMDER)

INSTRUCTION: Continue on 8 ½" x 11" paper if additional space is needed.

1. Use this report to indicate deficiencies, problems, and recommendations relating to a publication.
2. For CLASSIFIED TMDERs see OPNAVINST 5510H for mailing classified TMDERs.
3. Print clearly and carefully.
4. Submit TMDERs at web site http://nsdsa.phdnswc.navy.mil or mail to address on reverse.

1. PUBLICATION NO.	2. VOL/PART	3. REV/DATE or CHG/DATE	4. SYSTEM/EQUIPMENT ID

5. TITLE OF PUBLICATION	6. REPORT CONTROL NUMBER (6 digit UIC-YY-any four: xxxxxx-01-xxxx)

7. RECOMMENDED CHANGES TO PUBLICATION

7a Page #	7b Para #	7c RECOMMENDED CHANGES AND REASONS

8. ORIGINATOR'S NAME and WORK CENTER	9. DATE	10. PHONES Commercial/DSN/FAX Include extensions	11. TMMA of manual (NSDSA will complete)

12. Ship or Activity Name and Address (Include UIC/CAGE/HULL)	13. ORIGINATOR'S E-MAIL ADDRESS

NAVSEA 4160/1 (REV 3/2001)

FOLD HERE AND TAPE SECURELY
PLEASE DO NOT STAPLE

INCLUDE COMPLETE ADDRESS

USE
PROPER
POSTAGE

FOR OFFICIAL USE ONLY

COMMANDER
CODE 5E30DP BLDG 1388
NAVSURFWARCENDIV NSDSA
4363 MISSILE WAY
PORT HUENEME CA 93043-4307

FOLD HERE AND TAPE SECURELY
PLEASE DO NOT STAPLE

(Insert Classification of Publication Here) CLASSIFICATION:
Ref: NAVSEAINST 4160.3A NAVSEA S0005AA-PRO-010/TMMP

NAVSEA/SPAWAR TECHNICAL MANUAL DEFICIENCY/EVALUATION REPORT (TMDER)

INSTRUCTION: Continue on 8 ½" x 11" paper if additional space is needed.

1. Use this report to indicate deficiencies, problems, and recommendations relating to a publication.
2. For CLASSIFIED TMDERs see OPNAVINST 5510H for mailing classified TMDERs.
3. Print clearly and carefully.
4. Submit TMDERs at web site http://nsdsa.phdnswc.navy.mil or mail to address on reverse.

1. PUBLICATION NO.	2. VOL/PART	3. REV/DATE or CHG/DATE	4. SYSTEM/EQUIPMENT ID

5. TITLE OF PUBLICATION	6. REPORT CONTROL NUMBER (6 digit UIC-YY-any four: xxxxxx-01-xxxx)

7. RECOMMENDED CHANGES TO PUBLICATION

7a Page #	7b Para #	7c RECOMMENDED CHANGES AND REASONS

8. ORIGINATOR'S NAME and WORK CENTER	9. DATE	10. PHONES Commercial/DSN/FAX Include extensions	11. TMMA of manual (NSDSA will complete)

12. Ship or Activity Name and Address (Include UIC/CAGE/HULL)	13. ORIGINATOR'S E-MAIL ADDRESS

NAVSEA 4160/1 (REV 3/2001)

FOLD HERE AND TAPE SECURELY
PLEASE DO NOT STAPLE

INCLUDE COMPLETE ADDRESS

USE
PROPER
POSTAGE

FOR OFFICIAL USE ONLY

COMMANDER
CODE 5E30DP BLDG 1388
NAVSURFWARCENDIV NSDSA
4363 MISSILE WAY
PORT HUENEME CA 93043-4307

FOLD HERE AND TAPE SECURELY
PLEASE DO NOT STAPLE

(Insert Classification of Publication Here) CLASSIFICATION:
Ref: NAVSEAINST 4160.3A NAVSEA S0005AA-PRO-010/TMMP

NAVSEA/SPAWAR TECHNICAL MANUAL DEFICIENCY/EVALUATION REPORT (TMDER)

INSTRUCTION: Continue on 8 ½" x 11" paper if additional space is needed.

1. Use this report to indicate deficiencies, problems, and recommendations relating to a publication.
2. For CLASSIFIED TMDERs see OPNAVINST 5510H for mailing classified TMDERs.
3. Print clearly and carefully.
4. Submit TMDERs at web site http://nsdsa.phdnswc.navy.mil or mail to address on reverse.

1. PUBLICATION NO.	2. VOL/PART	3. REV/DATE or CHG/DATE	4. SYSTEM/EQUIPMENT ID

5. TITLE OF PUBLICATION	6. REPORT CONTROL NUMBER (6 digit UIC-YY-any four: xxxxxx-01-xxxx)

7. RECOMMENDED CHANGES TO PUBLICATION

7a Page #	7b Para #	7c RECOMMENDED CHANGES AND REASONS

8. ORIGINATOR'S NAME and WORK CENTER	9. DATE	10. PHONES Commercial/DSN/FAX Include extensions	11. TMMA of manual (NSDSA will complete)

12. Ship or Activity Name and Address (Include UIC/CAGE/HULL)	13. ORIGINATOR'S E-MAIL ADDRESS

NAVSEA 4160/1 (REV 3/2001)

FOLD HERE AND TAPE SECURELY
PLEASE DO NOT STAPLE

INCLUDE COMPLETE ADDRESS

USE
PROPER
POSTAGE

FOR OFFICIAL USE ONLY

COMMANDER
CODE 5E30DP BLDG 1388
NAVSURFWARCENDIV NSDSA
4363 MISSILE WAY
PORT HUENEME CA 93043-4307

FOLD HERE AND TAPE SECURELY
PLEASE DO NOT STAPLE