S6161-1C-FSE-010

0910-LP-108-4881 **REVISION 1**

TECHNICAL MANUAL
FOR

FRYERS, ELECTRIC, FRYMASTER MODEL FPH17SC SERIES, FILTRATION SYSTEM FRYERS

INSTALLATION, OPERATION, SERVICE AND PARTS MANUAL

Supersedure Notice: This manual supersedes S6161-1C-FSE-010, dated 15 March 2007, and all changes thereto.

"Distribution Statement "A": Approved for public release; distribution is unlimited."

DEPARTMENT OF THE NAVY
NAVAL SEA SYSTEMS COMMAND

0910-LP-108-4881

S6161-1C-FSE-010

0910-LP-108-4881 **REVISION 1**

TECHNICAL MANUAL
FOR

FRYERS, ELECTRIC, FRYMASTER MODEL FPH17SC SERIES, FILTRATION SYSTEM FRYERS

INSTALLATION, OPERATION, SERVICE AND PARTS MANUAL

Supersedure Notice: This manual supersedes S6161-1C-FSE-010, dated 15 March 2007, and all changes thereto.

"Distribution Statement "A": Approved for public release; distribution is unlimited."

DEPARTMENT OF THE NAVY
NAVAL SEA SYSTEMS COMMAND

30 DECEMBER 2008

S6161-1C-FSE-010
30 December 2008

IDENTIFYING TECHNICAL PUBLICATION SHEET FOR COMMERCIAL MANUAL

Supersedure Notice: This manual supersedes S6161-1C-FSE-010, dated 15 March 2007, and all changes thereto.

1. PURPOSE: This technical publication sheet is issued for the purpose of identifying and authorizing the following commercial manual for Navy use.

Manufacturer: Frymaster, LLC, 8700 Line Avenue, PO Box 51000, Shreveport, Louisiana 71135-1000
Purchase Order or Contract No.: N00024-06-C-2115
Requisition No.:
Equipment: Fryers, Electric, Frymaster Model FPH17SC Series, and Filtration System Fryers
National Stock Number: 0910-LP-108-4881
Title: Technical Manual for Fryers, Electric, Frymaster Model FPH17SC Series, and Filtration System Fryers; Installation, Operation, Service and Parts Manual
Additional Identification:
Date: 30 December 2008

2. ADDITIONAL COPIES: Additional copies are available from the Naval Logistics Library (NLL).

3. FILE LOCATION: The above-described commercial manual is filed in_____

4. AUTHORITY NOTICE AND DISTRIBUTION STATEMENT:

Published by direction of Commander, Naval Sea Systems Command.

Distribution Statement A: Approved for public release; distribution is unlimited.

FOR UNCLASSIFIED MANUALS

NOTICE: Reproduction for non-military use of the information or illustration in this publication is not permitted. The policy for military use reproduction is established in OPNAVINST 5510.1B.

This material may be reproduced by or for the U.S. Government pursuant to the rights acquired under Article 42 of Newport News Shipbuilding Purchase Order DoD Contracts Appendix A, December 2007.

TABLE OF CONTENTS

PART	TITLE
I	Model H14SC/H17SC/H22SC Single Fryers and FPH17SC Series Filtration System Fryers with Serial Numbers Beginning with 0308
II	Model H14SC/H17SC/H22SC Single Fryers, FPH17SC Series Filtration System Fryers with Serial Numbers Beginning with 0604

PART I

Model H14SC/H17SC/H22SC Single Fryers and FPH17SC Series Filtration System Fryers with Serial Numbers Beginning with 0308

NAVY SURFACE SHIP ELECTRIC FRYERS

Installation, Operation, Service, and Parts Manual

H14SC/H17SC/H22SC Single Fryers and FPH17SC Series Filtration System Fryers

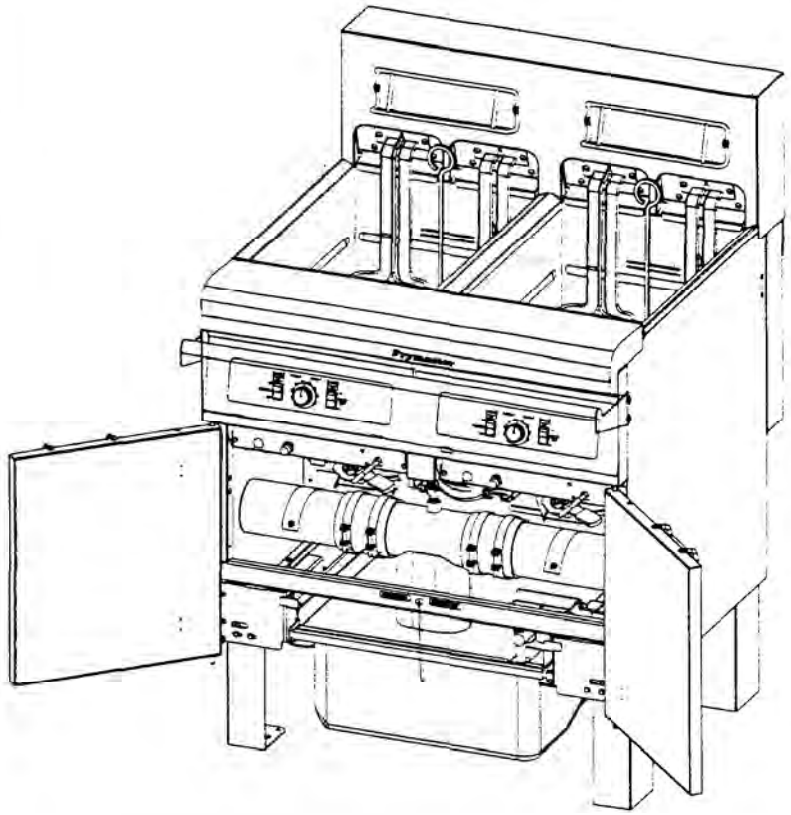

This manual is applicable to fryers manufactured beginning **August 2003** with serial numbers beginning with 0308. For serial numbers prior to 0308, refer to manual 819-5184.

Frymaster®

CFESA

Frymaster, a member of the Commercial Food Equipment Service Association, recommends using CFESA Certified Technicians.

24-Hour Service Hotline 1-800-551-8633

AUGUST 2005

8196004

www.frymaster.com E-mail: service@frymaster.com

NOTICE

This appliance is intended for professional use only and is to be operated by qualified personnel only. A Frymaster/DEAN Factory Authorized Service Center (FASC) or other qualified professional should perform installation, maintenance, and repairs. Installation, maintenance, or repairs by unqualified personnel may void the manufacturer's warranty.

NOTICE

This equipment must be installed in accordance with the appropriate national and local codes of the country and/or region in which the appliance is installed.

NOTICE TO U.S. CUSTOMERS

This equipment is to be installed in compliance with the basic plumbing code of the Building Officials and Code Administrators International, Inc. (BOCA) and the Food Service Sanitation Manual of the U.S. Food and Drug Administration.

⚠ WARNING

No structural material on the fryer should be altered or removed to accommodate placement of the fryer under a hood. Questions? Call the Frymaster Dean Service Hotline at 1-800-551-8633.

NOTICE TO OWNERS OF UNITS EQUIPPED WITH COMPUTERS

U.S.

This device complies with Part 15 of the FCC rules. Operation is subject to the following two conditions: 1) This device may not cause harmful interference, and 2) This device must accept any interference received, including interference that may cause undesired operation. While this device is a verified Class A device, it has been shown to meet the Class B limits.

CANADA

This digital apparatus does not exceed the Class A or B limits for radio noise emissions as set out by the ICES-003 standard of the Canadian Department of Communications.

Cet appareil numerique n'emet pas de bruits radioelectriques depassany les limites de classe A et B prescrites dans la norme NMB-003 edictee par le Ministre des Communcations du Canada.

⚠ DANGER

Improper installation, adjustment, maintenance or service, and unauthorized alterations or modifications can cause property damage, injury, or death. Read the installation, operating, and service instructions thoroughly before installing or servicing this equipment.

⚠ DANGER

The crumb tray in fryers equipped with a filter system must be emptied into a fireproof container at the end of frying operations each day. Some food particles can spontaneously combust if left soaking in certain shortening material.

⚠ WARNING

Do not bang fry baskets or other utensils on the fryer's joiner strip. The strip is present to seal the joint between the frypots. Banging fry baskets on the strip to dislodge shortening will distort the strip, adversely affecting its fit. It is designed for a tight fit and should only be removed for cleaning.

⚠ WARNING

Never spray the fryer with water or use water jets to clean the fryer.

Part I

NOTICE

IF, DURING THE WARRANTY PERIOD, THE CUSTOMER USES A PART FOR THIS ENODIS EQUIPMENT OTHER THAN AN UNMODIFIED NEW OR RECYCLED PART PURCHASED DIRECTLY FROM FRYMASTER DEAN, OR ANY OF ITS AUTHORIZED SERVICE CENTERS, AND/OR THE PART BEING USED IS MODIFIED FROM ITS ORIGINAL CONFIGURATION, THIS WARRANTY WILL BE VOID. FURTHER, FRYMASTER DEAN AND ITS AFFILIATES WILL NOT BE LIABLE FOR ANY CLAIMS, DAMAGES OR EXPENSES INCURRED BY THE CUSTOMER WHICH ARISE DIRECTLY OR INDIRECTLY, IN WHOLE OR IN PART, DUE TO THE INSTALLATION OF ANY MODIFIED PART AND/OR PART RECEIVED FROM AN UNAUTHORIZED SERVICE CENTER.

⚠ DANGER

Copper wire suitable for at least 167°F (75°C) must be used for power connections.

⚠ DANGER

The electrical power supply for this appliance must be the same as indicated on the rating and serial number plate located on the inside of the fryer door.

⚠ DANGER

This appliance must be connected to the voltage and phase as specified on the rating and serial number plate located on the inside of the fryer door.

⚠ DANGER

All wiring connections for this appliance must be made in accordance with the wiring diagrams furnished with the equipment. Wiring diagrams are located on the inside of the fryer door.

⚠ DANGER

Do not store or use gasoline or other flammable vapors and liquids in the vicinity of this or any other appliance.

NOTICE

Drawings and photos used in this manual are intended to illustrate operational, cleaning and technical procedures. They may differ slightly in appearance or placement between fryers but functionality should remain the same. They may not conform to onsite management operational procedures.

⚠ WARNING

Frymaster fryers equipped with legs are for permanent installations. Fryers fitted with legs must be lifted during movement to avoid damage and possible bodily injury. For a moveable or portable installation, Frymaster optional equipment casters must be used.
Questions? Call 1-800-551-8633 or email Service @Frymaster.com

⚠ DANGER

The front ledge of the fryer is not a step. Do not stand on the fryer. Serious injury can result from slips or contact with the hot oil.

⚠ DANGER

All wiring connections for this appliance must be made in accordance with the wiring diagrams furnished with the equipment. Wiring diagrams are located on the inside of the fryer door.

⚠ WARNING

This equipment is intended for indoor use only. Do not install or operate this equipment in outdoor areas.

Frymaster

Navy Surface Ship Electric Fryers
Installation, Operation, Service, and Parts Manual

TABLE OF CONTENTS

	Page
Chapter 1: Introduction	1-1
Chapter 2: Installation Instructions	2-1
Chapter 3: Operating Instructions	3-1
Chapter 4: Filtration Instructions	4-1
Chapter 5: Preventive Maintenance	5-1
Chapter 6: Operator Troubleshooting	6-1
Chapter 7: Service Procedures	7-1
Chapter 8: Parts List	8-1

NAVY SURFACE SHIP ELECTRIC FRYERS
CHAPTER 1: INTRODUCTION

1.1 General

Read the instructions in this manual thoroughly before attempting to operate this equipment. This manual covers all configurations of Navy Surface Ship Electric Fryer models specifically configured for use aboard surface ships of the U.S. Navy, including H14SC/H17SC/H22SC kW and FPH17SC kW filtration system models. The fryers in this model family have most parts in common, and when discussed as a group, will be referred to as "Navy Surface Ship Electric" fryers.

Although similar in appearance to the Footprint III family of Navy Electric fryers, the Navy Surface Ship Electric fryers feature a significantly different built-in filtration system. Other features, including the deep cold-zones and open frypots with tilt-up elements remain essentially unchanged. All Navy fryers are equipped with solid-state analog controllers. Fryers in this series can be single units or grouped in batteries of two or more fryers.

1.2 Safety Information

Before attempting to operate your unit, read the instructions in this manual thoroughly.

Throughout this manual, you will find notations enclosed in double-bordered boxes similar to the one below.

⚠ DANGER
Hot cooking oil causes severe burns. Never attempt to move a fryer containing hot cooking oil or to transfer hot cooking oil from one container to another.

⚠ **CAUTION** boxes contain information about actions or conditions that ***may cause or result in a malfunction of your system.***

⚠ **WARNING** boxes contain information about actions or conditions that ***may cause or result in damage to your system***, and which may cause your system to malfunction.

⚠ **DANGER** boxes contain information about actions or conditions that ***may cause or result in injury to personnel***, and which may cause damage to your system and/or cause your system to malfunction.

Fryers in this series are equipped with the following automatic safety features:

1. Two high-temperature detection features shut off power to the elements should the temperature controls fail.

2. A safety switch built into the drain valve prevents the elements from heating with the drain valve even partially open.

1.3 Controller Information

This equipment has been tested and found to comply with the limits for a Class A digital device, pursuant to Part 15 of the FCC rules. While this device is a verified Class A device, it has been shown to meet the Class B limits. These limits are designed to provide reasonable protection against harmful interference when the equipment is operated in a commercial environment. This equipment generates, uses and can radiate radio frequency energy and, if not installed and used in accordance with the instruction manual, may cause harmful interference to radio communications.

The user may find the following booklet prepared by the Federal Communications Commission helpful: "How to Identify and Resolve Radio-TV Interference Problems". This booklet is available from the U.S. Government Printing Office, Washington, DC 20402, Stock No. 004-000-00345-4.

1.4 Shipping Damage Claim Procedure

What to do if this equipment arrives damaged:

Please note that this equipment was carefully inspected and packed by skilled personnel before leaving the factory. The freight company assumes full responsibility for safe delivery upon acceptance of the equipment.

1. File Claim for Damages Immediately—Regardless of extent of damage.

2. Visible Loss or Damage—Be sure this is noted on the freight bill or express receipt and is signed by the person making the delivery.

3. Concealed Loss or Damage—If damage is unnoticed until equipment is unpacked, notify the freight company or carrier immediately and file a concealed damage claim. This should be done within 15 days of date of delivery. Be sure to retain container for inspection.

1.5 Service Information

For non-routine maintenance or repairs, or for service information, contact your local Frymaster Authorized Service Center (FASC). Service information may also be obtained by calling the Frymaster Technical Services Department (1-800-551-8633) or via e-mail at service @frymaster.com. The following information will be needed in order to assist you efficiently:

Model Number: _____

Serial Number: _____

Voltage: _____

Also be prepared to describe the specific problem.

RETAIN AND STORE THIS MANUAL IN A SAFE PLACE FOR FUTURE USE.

NAVY SURFACE SHIP ELECTRIC FRYERS
CHAPTER 2: INSTALLATION INSTRUCTIONS

2.1 Introduction

The instructions in this chapter cover all configurations of Navy Surface Ship Electric Fryer models specifically configured for use aboard surface ships of the U.S. Navy, including H14SC/H17SC/H22SC kW and FPH17SC kW filtration system models. The instructions do not cover and may not be used for installations aboard submarines or ashore.

Proper installation is essential for the safe, efficient, trouble-free operation of this appliance. Any unauthorized alteration of this equipment will void the Frymaster warranty.

NOTICE
If this equipment is wired directly into the electrical power supply, a means for disconnection from the supply having a contact separation of at least 3-mm in all poles must be incorporated in the fixed wiring.

NOTICE
This equipment must be positioned so that the plug is accessible unless other means for disconnection from the power supply (e.g., a circuit breaker) is provided.

NOTICE
If this appliance is permanently connected to fixed wiring, it must be connected by means of copper wires having a temperature rating of not less than 167°F (75°C).

NOTICE
If the electrical power supply cord is damaged, it must be replaced by a Frymaster Dean Factory Authorized Service Center technician or a similarly qualified person in order to avoid a hazard.

⚠ DANGER
This appliance must be connected to a power supply having the same voltage and phase as specified on the rating plate located on the inside of the appliance door.

⚠ DANGER
All wiring connections for this appliance must be made in accordance with the wiring diagram(s) furnished with the appliance. Refer to the wiring diagram(s) affixed to the inside of the appliance door when installing or servicing this equipment.

⚠ DANGER
The appliance area must be kept free and clear of combustible material at all times.

⚠ WARNING
Do not block the area around the base or under the fryers.

All installation and service on FRYMASTER equipment must be performed by qualified, certified, licensed, and/or authorized installation or service personnel.
Service may be obtained by contacting a local Frymaster DEAN Factory Authorized Service Center.

In the event of a power failure, the fryer(s) will automatically shut down. If this occurs, turn the power switch OFF. Do not attempt to start the fryer(s) until power is restored.

A clearance of 6 inches (15cm) must be provided at both sides and back adjacent to combustible construction. A minimum of 24 inches (61cm) should be provided at the front of the equipment for servicing and proper operation.

Connections should be made by means of an approved, flexible-metallic or rubber-covered electrical cable and quick-disconnect plug. The fryers may be installed with "hard-wired" connections, but use of quick-disconnect plugs will facilitate service if required. Connections are made to the fryer power input terminal block located in the contactor box(es) in the bottom of the fryer(s).

⚠ DANGER

Observe the following precautions when connecting the fryer to an emergency cutoff system:

- **Be sure that each fryer is connected to a dedicated set of contacts in the emergency cutoff system.**
- **Do not connect the contacts in series.**
- **Do not connect more than one fryer to each set of contacts.**
- **The contacts MUST be normally closed contacts that open in an emergency.**
- **The contacts CANNOT have an external voltage applied.**

2.2 Power Requirements

MODEL	VOLTAGE	PHASE	WIRE SERVICE	MIN. SIZE	AWG (mm^2)	AMPS PER LEG		
						L1	L2	L3
H14SC	440	3	3	8	(10)	19	19	19
H14SC	480	3	3	8	(10)	17	17	17
H17SC/FPH17SC	440	3	3	6	(16)	23	23	23
H17SC/FPH17SC	480	3	3	6	(16)	21	21	21
H22SC	440	3	3	6	(16)	29	29	29
H22SC	480	3	3	6	(16)	27	27	27

The FPH17SC Navy Surface Ship electric fryers are equipped with a filter system that requires a separate 120VAC, single-phase, 3-wire, 20 amp service (refer to wiring diagrams in paragraphs 7.10 and 7.11).

NOTICE

If this appliance is permanently connected to fixed wiring, it must be connected by means of copper wires having a temperature rating of not less than 167°F (75°C).

⚠ DANGER

This appliance must be connected to a power supply having the same voltage and phase as specified on the rating plate located on the inside of the appliance door.

⚠ DANGER

All wiring connections for this appliance must be made in accordance with the wiring diagram(s) furnished with the appliance. Refer to the wiring diagram(s) affixed to the inside of the appliance door when installing or servicing this equipment.

2.3 Installation

1. This equipment must be securely bolted to the deck.

2. Install deck studs for the specific fryer configuration in accordance with the diagrams at the end of this chapter.

3. Position the fryer on the deck studs and secure with appropriate nuts and lock washers.

⚠ DANGER

No structural material on the fryer should be altered or removed to accommodate placement of the fryer under a hood. Questions? Call the Frymaster Dean Service Hotline at 1-800-551-8633.

2.4 After Fryers Are Anchored At the Frying Station

⚠ DANGER

Hot oil can cause severe burns. Avoid contact. Under all circumstances, oil must be removed from the fryer before attempting to move it to avoid oil spills, falls and severe burns. This fryer may tip and cause personal injury if not secured in a stationary position.

1. Close frypot drain-valve(s) and fill frypot(s) with water to the bottom oil level line.

2. Boil out frypot(s) in accordance with the instructions in Section 5.1.3 of this manual.

3. Drain, clean, and fill frypot(s) with cooking oil. (See ***Equipment Setup and Shutdown Procedures*** in Chapter 3.)

2.5 Dimensions and Weights

Single Fryer: LWH (inches) 33.38 X 15.67 X 45.5 – 190 lbs. empty.

2-Fryer Battery: LWH (inches) 33.39 X 31.45 X 45.5 – 490 lbs. empty.

3-Fryer Battery: LWH (inches) 33.24 X 47.10 X 45.5 – 570 lbs. empty.

4-Fryer Battery: LWH (inches) 33.45 X 62.55 X 45.5 – 780 lbs. empty.

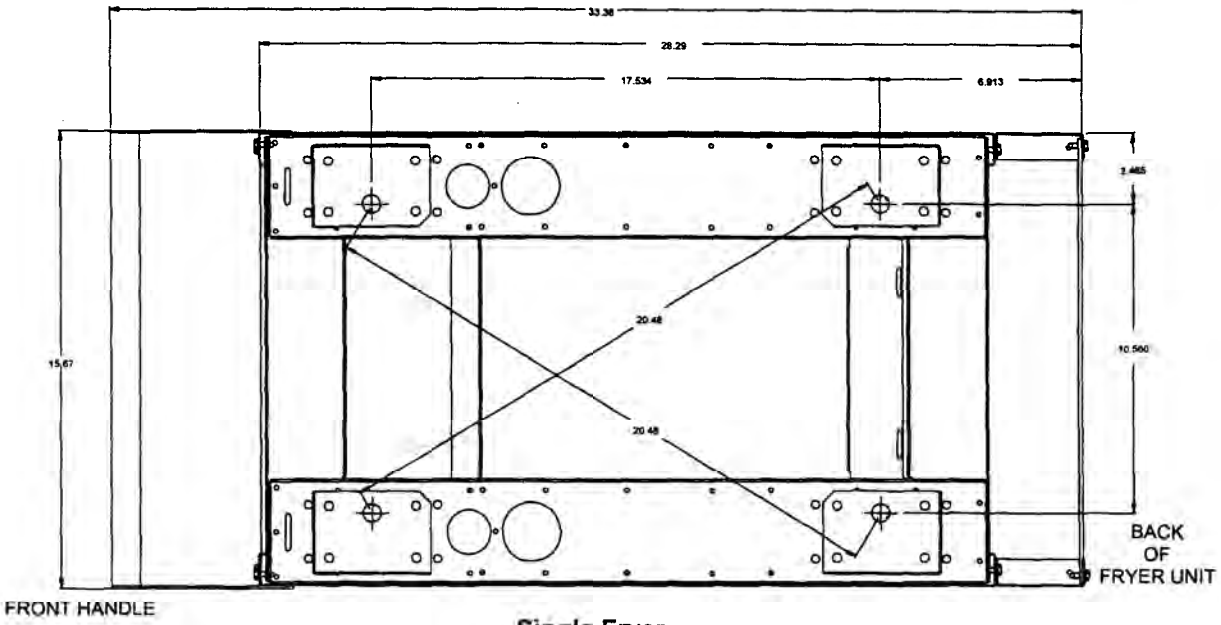

Single Fryer

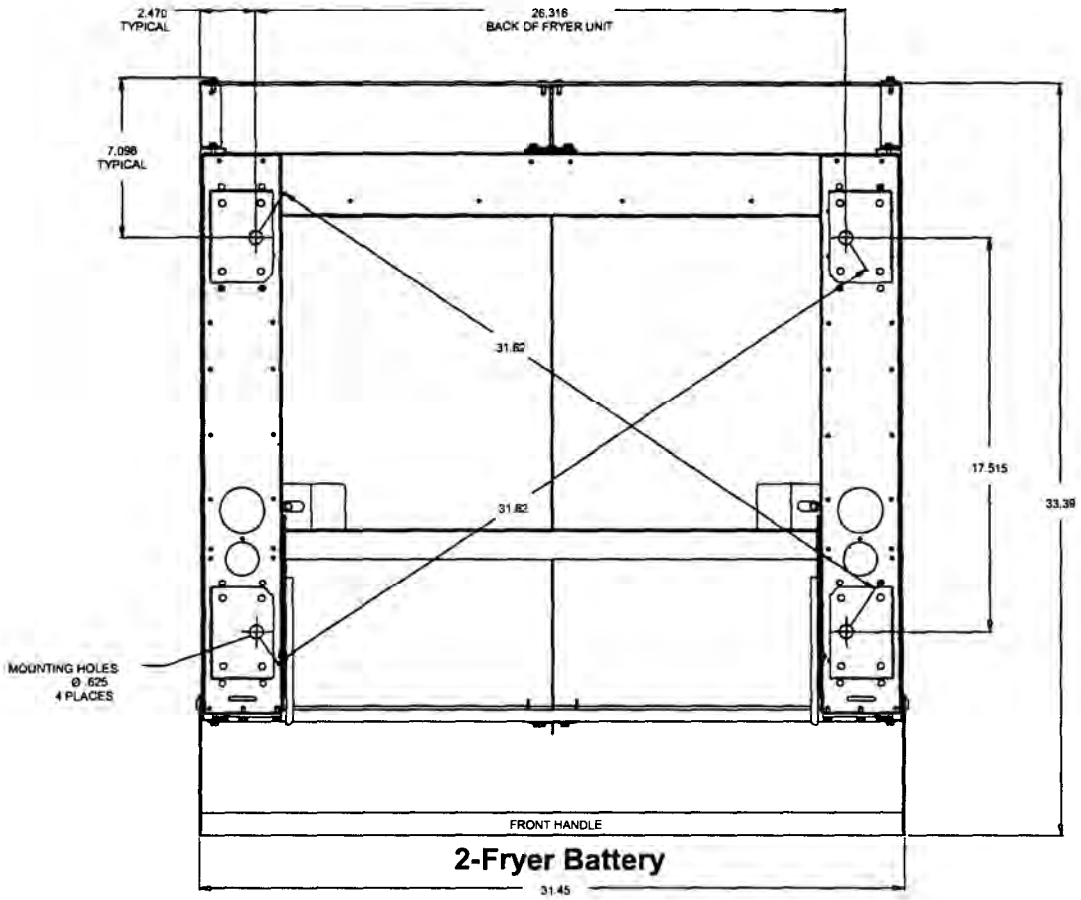

2-Fryer Battery

Part I

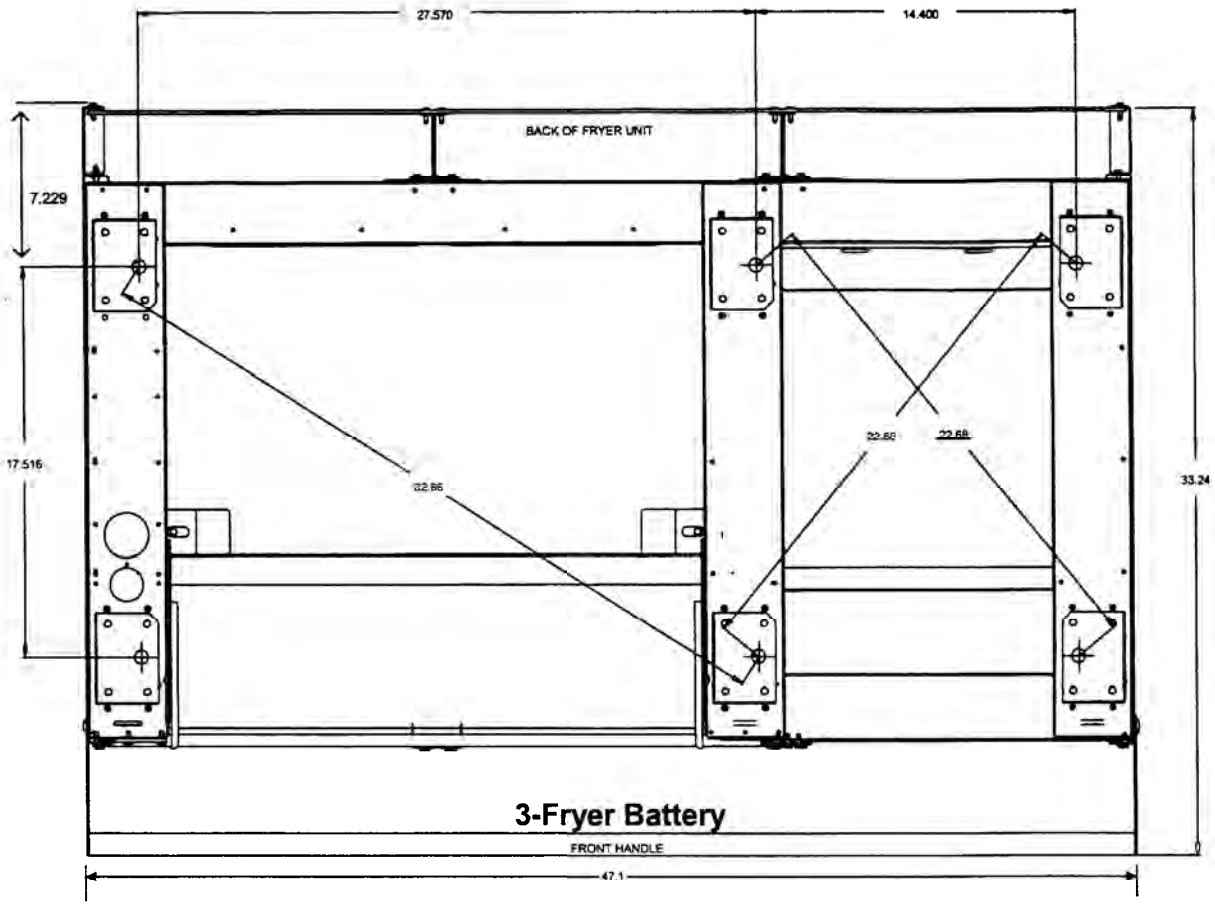
27.570
14.400
BACK OF FRYER UNIT
7.229
17.516
33.24
32.86
22.68
22.68
3-Fryer Battery
FRONT HANDLE
47.1

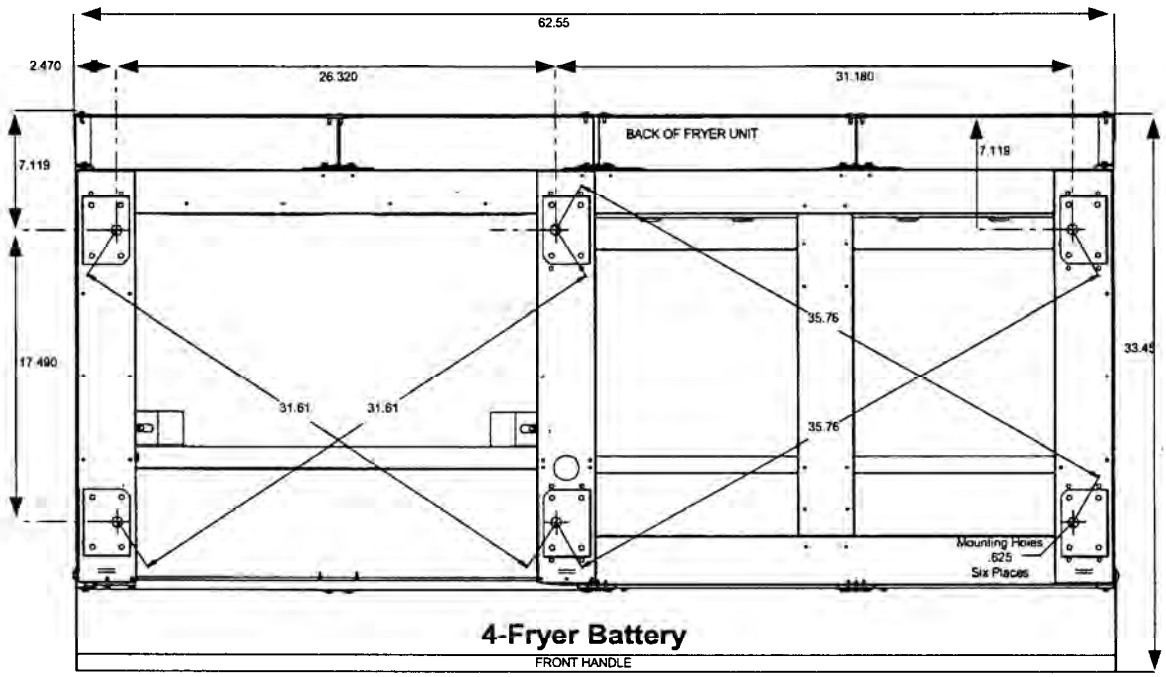
62.55
2.470
26.320
31.180
BACK OF FRYER UNIT
7.119
7.119
17.490
33.45
35.76
35.76
31.61
31.61
Mounting Holes
.625
Six Places
4-Fryer Battery
FRONT HANDLE

NAVY SURFACE SHIP ELECTRIC FRYERS
CHAPTER 3: OPERATING INSTRUCTIONS

3.1 Equipment Setup and Shutdown Procedures

Setup

⚠ DANGER
Never operate the appliance with an empty frypot. The frypot must be filled with water or cooking oil before energizing the elements. Failure to do so will result in irreparable damage to the elements and may cause a fire.

⚠ DANGER
Remove all drops of water from the frypot before filling with cooking oil. Failure to do so will cause spattering of hot liquid when the oil is heated to cooking temperature.

1. Fill the frypot with cooking oil to the bottom OIL LEVEL line located on the rear of the frypot. This will allow for oil expansion as heat is applied. Do not fill cold oil any higher than the bottom line; overflow may occur as heat expands the oil.

   NOTE: If solid shortening is used, first raise the elements, then pack the shortening into the bottom of the frypot. Lower the elements, and then pack the shortening around and over the elements. It may be necessary to add shortening to bring the level up to the proper mark after the packed shortening has melted.

⚠ DANGER
Never set a complete block of solid shortening on top of the heating elements.

When using solid shortening, always pre-melt the shortening before adding it to the frypot. If the shortening is not pre-melted, it must be packed down into the bottom of the frypot and between the elements, and the fryer must be started in the melt-cycle mode.

Never cancel the melt-cycle mode when using solid shortening. Doing so will result in damage to the elements and increase the potential for a flash fire.

2. If the fryer(s) is/are not hard-wired into the power supply, ensure that the power cord(s) is/are plugged into the appropriate receptacle(s). Verify that the face of the plug(s) is/are flush with the outlet plate, with no portion of the prongs visible.

3. Ensure that the oil level is at the *top* OIL LEVEL line when the oil *is at its cooking temperature*. It may be necessary to add oil to bring the level up to the proper mark, *after it has reached cooking temperature*.

Shutdown

1. Turn the fryer off.

2. Filter the cooking oil and clean the fryers (See Chapters 4 and 5).

3. Place the frypot covers on the frypots.

3.2 Operation of the Solid-State Analog Controller

NOTE: Refer to Chapter 4 of this manual for operating instructions for the built-in filtration system.

Fryers configured for the U.S. Navy are equipped with solid-state analog controllers.

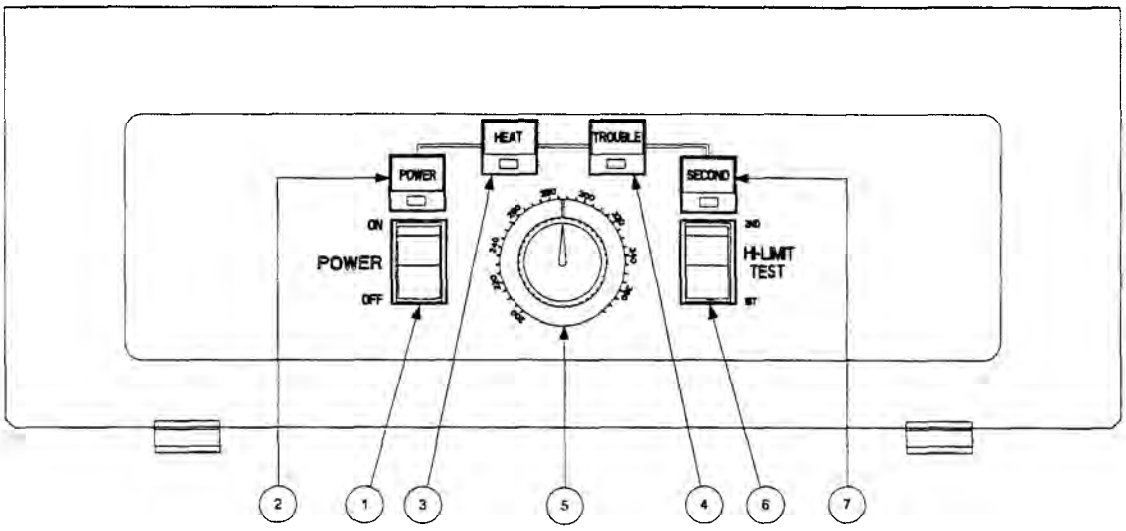

U.S. Navy Solid-State Analog Controller

ITEM	DESCRIPTION
1	Power Switch – Controls electrical power to fryer.
2	Power-On Light – Indicates when electrical power to fryer is ON.
3	Heating Mode Light – Indicates when heating element is ON.
4	Trouble Light – Indicates over high-limit or problem in heat control circuitry.
5	Thermostat Control Knob – Sets desired frying temperature.
6	Hi-Limit Test Switch – Tests high-limit thermostat.
7	Second Hi-Limit Test Light – Indicates fryer is in second high-limit test mode.

The analog controller, illustrated above, is used to adjust and maintain oil at the temperature indicated by the thermostat knob.

The fryer has two built-in high-limit protection features. If the temperature in the frypot reaches approximately 410°F, the controller opens the heat relay circuit, turning the elements off. If the temperature in the frypot reaches 450°F, a mechanical high-limit shuts off electrical power to the elements. ***The operator should periodically test each of the high-limit protection features, using the procedure at the end of this chapter, to verify that they are operating correctly.***

The analog controller has no timing features. The operator must monitor shake and pull times.

⚠ WARNING
Before pressing the power switch to the ON position, ensure that the frypot is properly filled with oil. See Section 3.1.

CONTROLLER OPERATING PROCEDURE

1. Verify that the thermostat knob is set to the desired cooking temperature.

2. Press the power switch to the ON position. The POWER light will illuminate.

3. If the frypot temperature is below 180°F, the controller will automatically enter a warm-up cycle (often called a melt cycle). The heating elements will cycle on and off repeatedly, allowing the oil to heat gradually, without scorching. During the warm-up cycle, the heating mode light will alternately illuminate and go off as the elements cycle on and off. Within about 45 minutes, the controller will exit the warm-up cycle and the heating mode light will remain continuously illuminated.

4. When the oil temperature reaches the thermostat knob setpoint, the elements will cycle OFF and the HEAT light will go off, indicating that the fryer is ready for the cooking process to begin.

HIGH-LIMIT TEST PROCEDURE

Tools Required: One 0-600°F pyrometer with sensing probe or an equivalent high-temperature thermometer.

NOTE: Conduct this test when the fryer will not be needed for about one hour and when the cooking oil is due to be changed (the test will ruin the cooking oil). Start the test with the controller turned ON and with the cooking oil at normal frying temperature. Stir the oil thoroughly to ensure even distribution and temperature.

⚠ DANGER
If the expected results (indicated by italics) for Steps 3 and 4 below do not occur, turn off the fryer at the main circuit breaker panel and do not use the fryer until it has been repaired by an authorized technician.

1. Verify that cooking oil is at the bottom OIL-LEVEL line. Add oil if necessary.

2. Turn the power switch ON and set the control knob to the normal frying temperature.

3. Insert the pyrometer probe into the frypot so that its tip is near the temperature probe on the element (i.e., approximately 5-inches into the oil, near the center of the frypot). Press and hold the high-limit test switch in the "1st" test position until the TROUBLE light illuminates. Release the test switch.

   The trouble light should have come on when the temperature was approximately 410°F (± 10°F) and the heating elements should have de-energized (indicated by the HEAT *light going out).*

4. Press and hold the high-limit test switch in the "2nd" test position until the 2nd High-Limit light illuminates. Release the switch.

   The 2nd High-Limit light should have come on when the temperature was between 430°F and 460°F.

   *For fryers connected to an external shunt power supply, **all** fryers should have been shut off completely and all control panel lights should have been extinguished. For fryers not connected to an external shunt power supply, only the fryer being tested should have been shut off.*

5. Place the controller power switch in the OFF position.

6. Allow the cooking oil to cool to below normal frying temperature. When the power switch is again placed in the ON position, the elements should re-energize and the operating thermostat should resume control of the temperature. If the TROUBLE light remains on instead, allow the oil additional time to cool.

NAVY SURFACE SHIP ELECTRIC FRYERS
CHAPTER 4: FILTRATION INSTRUCTIONS

4.1 Introduction

The FootPrint Pro filtration system allows the cooking oil or shortening in one frypot to be safely and efficiently filtered while the other frypots in a battery remain in operation. Section 4.2 covers preparation of the filter system for use. Operation of the system is covered in section 4.3.

⚠ WARNING

The work center supervisor is responsible for ensuring that operators are made aware of the inherent hazards of operating a hot oil filtering system, particularly the aspects of oil filtration, draining and cleaning procedures.

4.2 Preparing the Filter for Use

1. Rotate the pan-locking rod to either side until it clears the filter pan, then pull the pan out from the cabinet. Remove the crumb tray, hold-down ring and filter screen. Clean all components with a solution of detergent and hot water, then dry thoroughly.

   The filter pan is equipped with rollers in rails, much like a kitchen drawer. The pan may be removed for cleaning or to gain access to interior components by lifting the front of the pan to disengage the front rollers, then pulling it forward until the rear rollers clear the rails. The pan cover must not be removed except for cleaning, interior access, or to allow a shortening disposal unit (SDU) to be positioned under the drain.

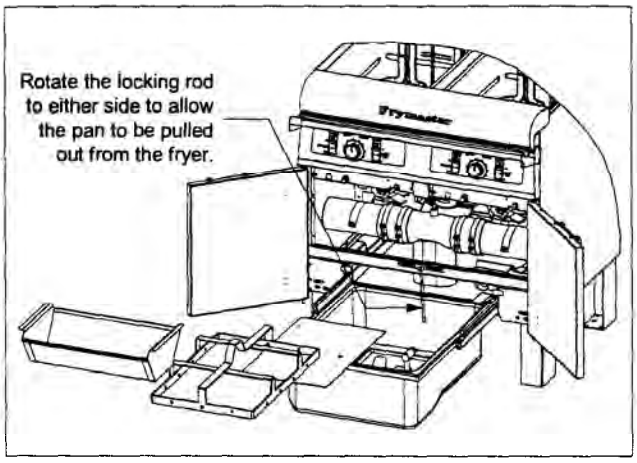

2. Inspect the filter pan connection fitting to ensure that both o-rings are in good condition. On the FPH117 fryers the o-rings are located on the tube spout behind the filter pan at the rear of the fryer. O-rings on fryers having more than one battery are located on the tube disconnect inside the fryer as shown to the right.

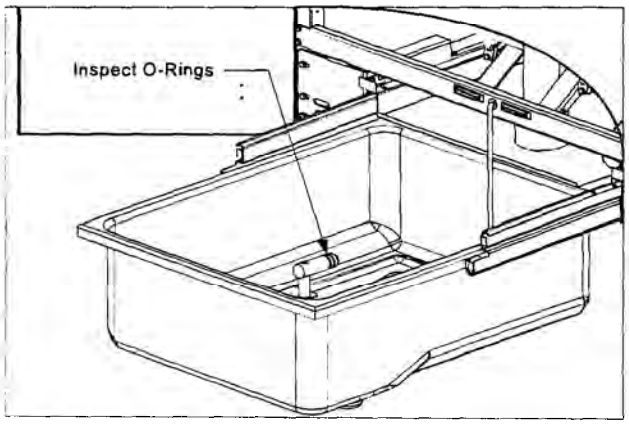

3. Place the metal filter screen in the center of the bottom of the pan, then lay a sheet of filter paper on top of the screen, overlapping on all sides.

4. Position the hold-down ring over the filter paper and lower the ring into the pan, allowing the paper to fold up around the ring as it is lowered to the bottom of the pan.

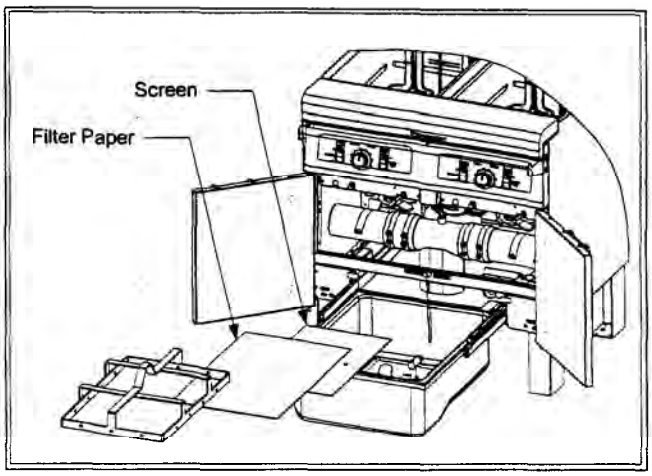

5. When the hold-down ring is in position, sprinkle one cup of filter powder evenly over the paper.

6. Replace the crumb tray in the filter pan, then push the filter pan back into the fryer, positioning it all the way to the back of the cabinet.

4.3 Operation of the Filter

⚠ DANGER

Draining and filtering of cooking oil must be accomplished with care to avoid the possibility of a serious burn caused by careless handling. The oil to be filtered is at or near 350°F. Ensure drain handles are in their proper position before operating any switches or valves. Wear all appropriate safety equipment when draining and filtering cooking oil or shortening.

⚠ DANGER

NEVER attempt to drain cooking oil from the fryer with the elements energized! Doing so will cause irreparable damage to the elements and may cause a flash fire. Doing so will also void the Frymaster warranty.

1. Turn the fryer power OFF. Drain the frypot into the filter pan. If necessary, use the ***Fryer's Friend*** clean-out rod to clear the drain from **inside** the frypot.

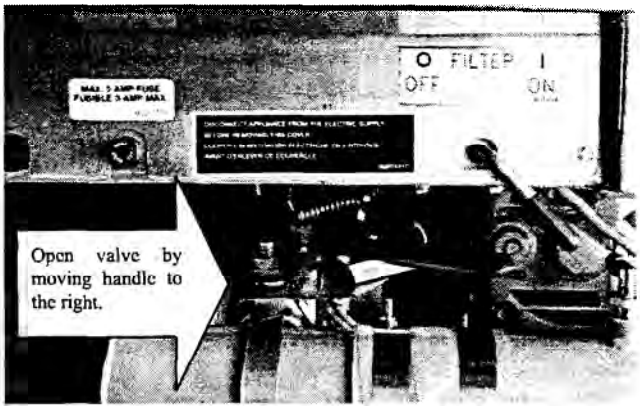

⚠ DANGER

Do not drain more than one frypot at a time into the built-in filtration unit to avoid overflow and spillage of hot oil.

⚠ DANGER

NEVER attempt to clear a clogged drain valve from the front of the valve! Hot oil will rush out creating the potential for severe burns. DO NOT hammer on the drain valve with the cleanout rod or other objects. Damage to the ball inside will result in leaks and will void the Frymaster warranty.

2. Remove the basket support rack from the frypot, raise the element assembly to the up position, and snap the Power Shower into position.

⚠ DANGER

DO NOT operate the filter without the Power Shower in place. Hot oil will spray out of the fryer and cause injury.

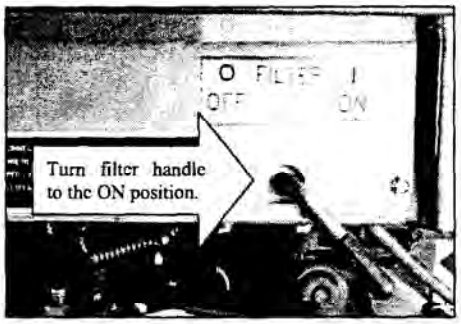

3. After the cooking oil has drained from the frypot, turn the filter handle to the ON position to start the pump and begin the filtering process. There may be a slight delay before the pump activates.

4. The filter pump draws the cooking oil through the filter medium and circulates it back up to and through the frypot during a 5-minute process called polishing. Polishing cleans the oil by trapping solid particles in the filter medium.

5. After the oil is filtered (about 5 minutes), close the drain valve and allow the fryer to refill. Let the filter pump run 10 to 12 seconds after the oil begins to sputter from the Power Shower openings. Turn the filter off, remove the Power Shower and let it drain.

⚠ WARNING

The filter pump is equipped with a manual reset switch (see photo below) in case the filter motor overheats or an electrical fault occurs. If this switch trips, turn off power to the filter system and allow the pump motor to cool 20 minutes before attempting to reset the switch.

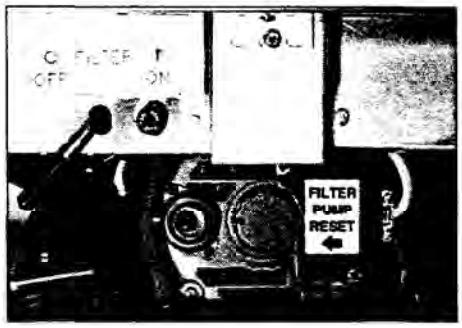

6. Lower the elements into the frypot and reinstall the basket support rack. Ensure the drain valve is fully closed. (If the drain valve is not fully closed, the fryer will not operate.) Turn the fryer ON and allow the cooking oil to reach setpoint.

⚠ DANGER

The crumb tray must be emptied into a fireproof container at the end of frying operations each day. Some food particles can spontaneously combust if left soaking in certain shortening material.

⚠ WARNING

Do not bang fry baskets or other utensils on the fryer's joiner strip. The strip is present to seal the joint between the fry vessels. Banging fry baskets on the strip to dislodge shortening will distort the strip, adversely affecting its fit. It is designed for a tight fit and should only be removed for cleaning.

4.4 Draining and Disposing of Waste Oil

When your cooking oil has reached the end of its usable life, drain the oil into an appropriate container for transport to the disposal container. Frymaster recommends the use of the Frymaster Shortening Disposal Unit (SDU). Refer to the documentation furnished with the disposal unit for specific operating instructions. If a shortening disposal unit is not available, allow the oil to cool to 100°F, then drain the oil into a metal stockpot or similar metal container. When draining is finished, close the fryer drain valve securely.

NOTE: The filter pan cover must be removed from the fryer in order to position the SDU beneath the drain.

⚠ DANGER

Allow oil to cool to 100°F before draining into an appropriate container for disposal. When draining oil into a disposal unit, do not fill above the maximum fill line located on the container.

NAVY SURFACE SHIP ELECTRIC FRYERS
CHAPTER 5: PREVENTIVE MAINTENANCE

5.1 Cleaning the Fryer

⚠ DANGER
The crumb tray in fryers equipped with a filter system must be emptied into a fireproof container at the end of frying operations each day. Some food particles can spontaneously combust if left soaking in certain shortening material.

⚠ DANGER
Never attempt to clean the fryer during the frying process or when the frypot is filled with hot oil. If water comes in contact with oil heated to frying temperature, it will cause spattering of the oil, which can result in severe burns to nearby personnel.

⚠ WARNING
Use a commercial-grade cleaner formulated to effectively clean and sanitize food-contact surfaces. Read the directions for use and precautionary statements before use. Particular attention must be paid to the concentration of cleaner and the length of time the cleaner remains on the food-contact surfaces.

5.1.1 Clean Inside and Outside of the Fryer Cabinet – Daily

Clean inside the fryer cabinet with a dry, clean cloth. Wipe all accessible metal surfaces and components to remove accumulated oil/shortening and dust.

Clean outside the fryer cabinet, with a clean, damp cloth soaked with dishwashing detergent. Wipe with a clean, damp cloth.

5.1.2 Clean the Built-in Filtration System – Daily

⚠ WARNING
Never drain water into the filter pan. Water will damage the filter pump.

There are no periodic preventive maintenance checks and services required for the FootPrint Pro Filtration System other than daily cleaning of the filter pan and associated components with a solution of hot water and detergent.

Immediately after each use, drain the Power Shower completely. If oil is leaking at the point where the Power Shower plugs into the frypot, verify the gasket on the connection fitting is present and in good condition. If you suspect blockage, unscrew the clean-out plugs at each corner of the frame. Place the frame in a pan of hot water for several minutes to melt any solidified oil or shortening. Use a long, narrow bottlebrush, hot water and detergent to clean inside the frame. If necessary, insert a straightened paper clip or similarly sized wire into the holes in the frame to remove any

solidified shortening or other blockages. Rinse with hot water, dry thoroughly, and reinstall the plugs before using.

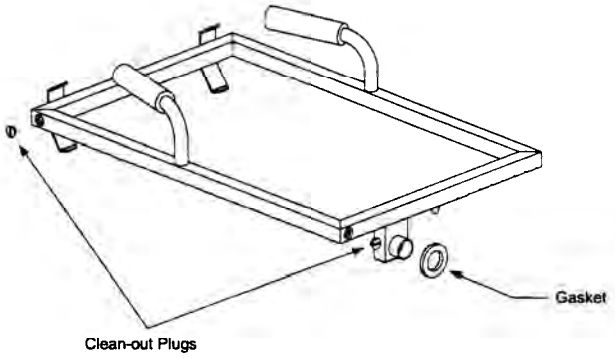

⚠ DANGER
Failure to reinstall the clean-out plugs in the Power Shower will cause hot oil to spray out of the frypot during the filtering process, creating an extreme burn hazard to personnel.

5.1.3 Clean the Frypot and Heating Elements – Weekly

⚠ DANGER
Never operate the appliance with an empty frypot. The frypot must be filled with water or cooking oil before energizing the elements. Failure to do so will result in irreparable damage to the elements and may cause a fire.

Boiling-Out the Frypot

Before the fryer is first used, it should be boiled out to ensure that residue from the manufacturing process has been eliminated. Also, after the fryer has been in use for a period of time, a hard film of caramelized vegetable oil will form on the inside of the frypot. This film should be periodically removed by following the boil-out procedure that follows.

1. Before switching the fryer(s) ON, close the frypot drain valve(s), then fill the empty frypot with a mixture of cold water and dishwashing detergent. Follow instructions on detergent container when mixing.

2. Press the fryer ON/OFF switch to the ON position.

3. Set the temperature control knob to the lowest setting.

4. Simmer the solution for 45 minutes to one hour. Do not allow the water level to drop below the bottom oil-level line in the frypot during the boil-out operation.

⚠ DANGER
Never leave the fryer unattended during the boil-out process. If the boil-out solution boils over, turn the fryer off immediately and let the solution cool for a few minutes before resuming the process.

5. Turn the fryer ON/OFF switch(s) to the OFF position.

6. Add two gallons of water. Drain out the solution and clean the frypot(s) thoroughly.

⚠ WARNING

Do not drain boil-out solution into a shortening disposal unit, a built-in filtration unit, or a portable filter unit. These units are not intended for this purpose, and will be damaged by the solution.

7. Refill the frypot(s) with clean water. Rinse the frypot(s) twice, drain and dry with a clean towel. Thoroughly remove all water from the frypot and elements before refilling the frypot with cooking oil.

⚠ DANGER

Remove all drops of water from the frypot before filling with cooking oil. Failure to do so will cause spattering of hot liquid when the oil is heated to cooking temperature.

5.1.4 Clean Detachable Parts and Accessories – Weekly

Wipe all detachable parts and accessories with a clean, dry cloth. Use a clean cloth saturated with detergent to remove accumulated carbonized oil on detachable parts and accessories. Rinse the parts and accessories thoroughly with clean water and wipe dry before reinstalling.

5.2 Check Calibration of Temperature Control Knob – Monthly

1. After the cooking oil reaches operating temperature, let the heating elements cycle at least four times (indicated by the HEAT light going out and coming back on).

2. Insert a thermometer or pyrometer probe near the temperature-sensing probe approximately five inches deep into the cooking oil. When the heating elements cycle on for the fourth time, the thermometer should read within ±5°F of the temperature control knob setting.

3. If the knob requires adjustment:

   a. Loosen the setscrew in the control knob until the outer shell of the knob will rotate on the insert inside the knob.

   b. Rotate the outer shell of the knob until the index line on the knob aligns with the mark that corresponds to the thermometer or pyrometer reading.

   c. Hold the knob and tighten the setscrew.

   d. Recheck the thermometer or pyrometer reading and the temperature control knob setting the next time the HEAT light illuminates.

   e. Repeat steps a through d until the thermometer or pyrometer reading and the knob setting agree within 5°F.

5.3 Annual/Periodic System Inspection

This appliance should be inspected and adjusted periodically by qualified service personnel as part of the galley material maintenance management (3M) program.

Frymaster recommends that a Factory Authorized Service Technician inspect this appliance at least annually as follows:

Fryer

- Inspect the cabinet inside and out, front and rear for excessive oil build-up and/or oil migration.
- Verify that the heating element wires are in good condition and that leads have no visible fraying or insulation damage and that they are free of oil migration build-up.
- Verify that heating elements are in good condition with no carbon/caramelized oil build-up. Inspect the elements for signs of extensive dry-firing.
- Verify that the tilt mechanism is working properly when lifting and lowering elements, and that the element wires are not binding and/or chafing.
- Verify the heating-element amp-draw is within the allowed range as indicated on the appliance's rating plate.
- Verify that the temperature and high-limit probes are properly connected, tightened and functioning properly, and that mounting hardware and probe guards are present and properly installed.
- Verify that component box and contactor box components (i.e. controller, relays, interface boards, transformers, contactors, etc.) are in good condition and free from oil migration build-up and other debris.
- Verify that component box and contactor box wiring connections are tight and that wiring is in good condition.
- Verify that all safety features (i.e. contactor shields, drain safety switches, reset switches, etc.) are present and functioning properly.
- Verify that the frypot is in good condition and free of leaks and that the frypot insulation is in serviceable condition.
- Verify that all wiring harnesses and wiring connections are tight and in good condition.

Built-In Filtration System

- Inspect all oil-return and drain lines for leaks and verify that all connections are tight.
- Inspect the filter pan for leaks and cleanliness. If there is a large accumulation of crumbs in the crumb basket, instruct the work center supervisor/watch supervisor that the crumb basket must be emptied into a fireproof container and cleaned daily.

- Verify that all O-rings and seals (including those on the Power Shower and on quick-disconnect fittings) are present and in good condition. Replace o-rings and seals if worn or damaged.

- Check filtration system integrity as follows:

  - Verify that filter pan cover is present and properly installed.

  - With the filter pan empty, place each oil return handle, one at a time, in the ON position. Verify that the pump activates and that bubbles appear in the cooking oil (or that gurgling is heard from the Power Shower port) of the associated frypot.

  - Close all oil return valves (i.e., place all oil return handles in the OFF position). Verify proper functioning of each oil return valve by activating the filter pump using the lever on one of the oil return handle microswitches. No air bubbles should be visible in any frypot (or no gurgling should be heard from the Power Shower ports).

  - Verify that the filter pan is properly prepared for filtering, then drain a frypot of oil heated to 350°F into the filter pan and close the frypot drain valve. Place the oil return handle in the ON position. Allow all cooking oil to return to the frypot (indicated by bubbles in the cooking oil or, on units with Power Showers, cessation of oil flow from the Power Shower). Return the oil return handle to the OFF position. The frypot should have refilled in no more than 2 minutes and 30 seconds.

NAVY SURFACE SHIP ELECTRIC FRYERS
CHAPTER 6: OPERATOR TROUBLESHOOTING

6.1 Introduction

This section provides an easy reference guide to some of the common problems that may occur during the operation of this equipment. The troubleshooting guides that follow are intended to help correct, or at least accurately diagnose, problems with this equipment. Although the chapter covers the most common problems reported, you may encounter problems that are not covered. In such instances, the Frymaster Technical Services staff will make every effort to help you identify and resolve the problem.

When troubleshooting a problem, always use a process of elimination starting with the simplest solution and working through to the most complex. Never overlook the obvious – anyone can forget to plug in a cord or fail to close a valve completely. Most importantly, always try to establish a clear idea of why a problem has occurred. Part of any corrective action involves taking steps to ensure that it doesn't happen again. If a controller malfunctions because of a poor connection, check all other connections, too. If a fuse continues to blow, find out why. Always keep in mind that failure of a small component may often be indicative of potential failure or incorrect functioning of a more important component or system.

Before calling a service agent or the Frymaster HOTLINE (1-800-551-8633) or contacting via e-mail at service@frymaster.com:

- **Verify that power is connected and that circuit breakers are on.**
- **Verify that frypot drain valves are fully closed.**

⚠ DANGER

Hot cooking oil will cause severe burns. Never attempt to move this appliance when filled with hot cooking oil or to transfer hot cooking oil from one container to another.

⚠ DANGER

This equipment should be disconnected from the electrical power supply when servicing, except when electrical circuit tests are required. Use extreme care when performing such tests.

This appliance may have more than one electrical power supply connection point. Disconnect all power supplies before servicing.

Inspection, testing, and repair of electrical components should be performed by authorized personnel only.

6.2 Troubleshooting

6.2.1 Control and Heating Problems

Problem	Probable Causes	Corrective Action
Controller won't activate.	A. Power cord is not plugged in or circuit breaker is tripped.	A. Plug power cord in and verify that circuit breaker is not tripped.
	B. Controller has failed.	B. If available, substitute a controller known to be working for the suspect controller. If the substitute controller functions correctly, order a new controller.
	C. Power supply component or interface board has failed.	C. If any of the components in the power supply system (including the transformer and interface board) fail, power will not be supplied to the controller and it will not function. Determining which component has failed is beyond the scope of operator troubleshooting. Call FASC.
Fryer does not heat.	A. Drain valve is open.	A. This fryer is equipped with a drain safety switch that prevents the heating element from being energized if the drain valve is not fully closed. Verify that the drain valve is fully closed.
	B. Controller has failed.	B. If available, substitute a controller known to be working for the suspect controller. If the substitute controller functions correctly, order a new controller.
	C. One or more other components have failed.	C. If the circuitry in the fryer control system cannot determine the frypot temperature, the system will not allow the element to be energized or will de-energize the element if it is already energized. If the contactor, element, or associated wiring fails, the element will not energize. Determining which specific component is malfunctioning is beyond the scope of operator troubleshooting. Call FASC.

Problem	Probable Causes	Corrective Action
Fryer repeatedly cycles on and off when first started.	Fryer is in melt-cycle mode.	This is normal. The standard operational mode for the controller is for the elements to cycle on and off until the temperature in the frypot reaches 180°F (82°C). The purpose of the melt-cycle is to allow controlled melting of solid shortening to prevent scorching and flash fires or damage to the element.
Fryer does not heat after filtering.	Drain valve is open.	This fryer is equipped with a drain safety switch that prevents the heating element from being energized if the drain valve is not fully closed. Verify that the drain valve is fully closed.
Fryer heats until high limit trips with heat indicator ON.	Temperature probe or controller has failed.	If available, substitute a controller known to be working for the suspect controller. If the substitute controller functions correctly, order a new controller. If substitution of the controller does not resolve the problem, the most likely cause is a failed temperature probe.
Fryer heats until high limit trips without heat indicator ON.	Contactor or controller has failed.	If available, substitute a controller known to be working for the suspect controller. If the substitute controller functions correctly, order a new controller. If substitution of the controller does not resolve the problem, the most likely cause is a contactor failed in the closed position.
Fryer stops heating with heat indicator ON.	The high limit thermostat or contactor has failed.	The fact that the heat indicator is ON indicates that the controller is functioning properly and is calling for heat. The high limit thermostat functions as a normally closed switch. If the thermostat fails, the "switch" opens and power to the elements is shut off. If the contactor fails to close, no power is supplied to the elements. Determining which component has failed is beyond the scope of operator troubleshooting. Call FASC.

6.2.2 Error Messages and Display Problems

Problem	Probable Causes	Corrective Action
Controller trouble light ON.	Oil temperature above acceptable range or a problem with the temperature measuring circuitry.	This in an indication of a malfunction in the temperature measuring or control circuitry, including a failure of the high limit thermostat. Determining the specific problem is beyond the scope of operator troubleshooting. Shut the fryer down immediately.
Controller trouble light ON and heating mode light ON.	Open drain valve or problem with latching circuits	Verify that the drain valve is fully closed. The fryer will not function if the drain valve is not fully closed. If the drain valve is fully closed, the problem is within the latching circuitry and is beyond the scope of operator troubleshooting.

6.2.3 Filtration Problems

Problem	Probable Causes	Corrective Action
Filter pump won't start.	A. Power cord is not plugged in or circuit breaker is tripped.	A. Verify that the power cord is fully plugged in. If so, verify that circuit breaker is not tripped.
	B. Pump motor has overheated causing the thermal overload switch to trip.	B. If the motor is too hot to touch for more than a few seconds, the thermal overload switch has probably tripped. Allow the motor to cool at least 20 minutes then press the Pump Reset Switch.
	C. Blockage in filter pump. **Test:** Close the drain valve and pull the filter pan out from the fryer. Activate the pump. If the pump motor hums for a short time then stops, the probable cause is blockage of the pump itself.	C. Pump blockages are usually caused by sediment buildup in the pump due to improperly sized or installed filter paper and failure to use the crumb screen.

(continued on following page)

Problem	Probable Causes	Corrective Action
Filter pump runs but oil does not return to frypot and there is no bubbling oil or air coming from the Power Shower.	Blockage in filter pan suction tube. **Test:** Close the drain valve and pull the filter pan out from the fryer. Activate the pump. If the air or bubbling oil comes out of the Power Shower, there is a blockage in the filter pan suction tube.	The blockage may be caused by sediment buildup or, if solid shortening is used, solidified shortening in the tube. Use a thin, flexible wire to remove the blockage.
Filter pump runs, but oil return is very slow and bubbling oil comes out of the Power Shower.	A. Improperly installed filter pan components.	A. Verify that filter screen is in bottom of pan with paper top of screen. Verify that o-rings are present and in good condition on filter pan connection fitting.
	B. Attempting to filter with oil or shortening that is not hot enough.	B. In order to properly filter, the oil or shortening should be at or near 350°F (177°C). At temperatures lower than this, the oil becomes too thick to pass through the filter medium easily, resulting in much slower oil return and eventual overheating of the filter pump motor. Make sure oil is at or near frying temperature before draining oil into filter pan.
Power Shower not spraying properly.	A. Missing or worn Power Shower gasket.	A. Verify that the gasket is present and in good condition.
	B. Clogged openings in Power Shower frame.	B. If the Power Shower is not cleaned on a routine basis, sediment will eventually block the small holes around the edges of the frame. Also, when using solid shortening, if the Power Shower is not allowed to drain completely, the shortening will solidify in the holes and may fill the frame. Completely drain the Power Shower after each filtering and clean regularly in accordance with the instructions in Chapter 5 of this manual.

6.3 Replacing the Controller or Controller Wiring Harness

1. Disconnect the fryer from the electrical supply. For fryers that have 90°-angle topcaps, remove the two screws in the upper corners of the control panel and swing the panel open from the top, allowing it to rest on its hinge tabs. The bezel on fryers with rounded topcaps is held in place by tabs at the top and bottom. Slide the bezel up to disengage the lower tabs. Then slide the bezel down to disengage the upper tabs. Remove the top two screws holding the controller to the control panel frame. The controller will hinge down to access the 15-pin connector on the back.

2. Disconnect the wiring harness from the back of the controller. ***If replacing the harness***, disconnect it from the interface board. ***If replacing the controller***, disconnect the ground wire and remove the controller by lifting it from the hinge slots in the control panel frame.

3. Reverse the procedure to install a new controller or wiring harness.

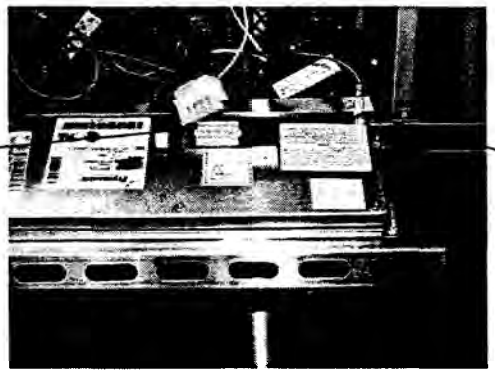

NAVY SURFACE SHIP ELECTRIC FRYERS
CHAPTER 7: SERVICE PROCEDURES

7.1 General

Before performing any maintenance on this equipment, disconnect the fryer from the electrical power supply.

When electrical wires are disconnected, it is recommended that they be marked in such a way as to facilitate re-assembly.

7.2 Replacing a Controller

1. Remove the two screws from the upper corners of the control panel on fryers that have 90° angle topcaps. The controller bezel on fryers that have rounded topcaps is held in place by tabs at the top and bottom. Slide the bezel up to disengage the lower tabs. Then slide the bezel down to disengage the upper tabs. If applicable, remove the top two screws holding the controller to the control panel frame. The control panel is hinged at the bottom and will swing open from the top.

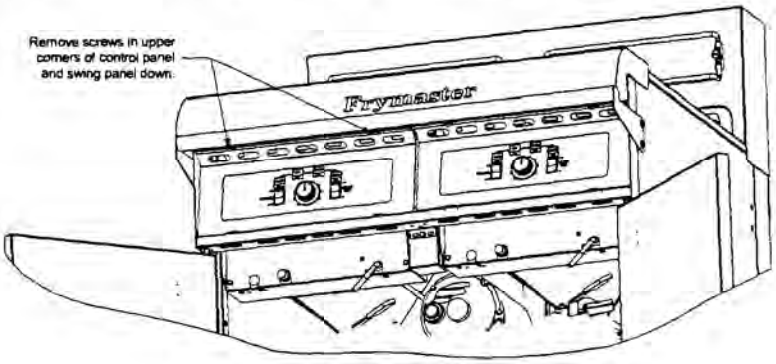

2. Unplug the wiring harness from the connector on the back of the controller and disconnect the grounding wire from terminal adjacent to the connector. Remove the control panel assembly by lifting it from the hinged slots in the control panel frame.

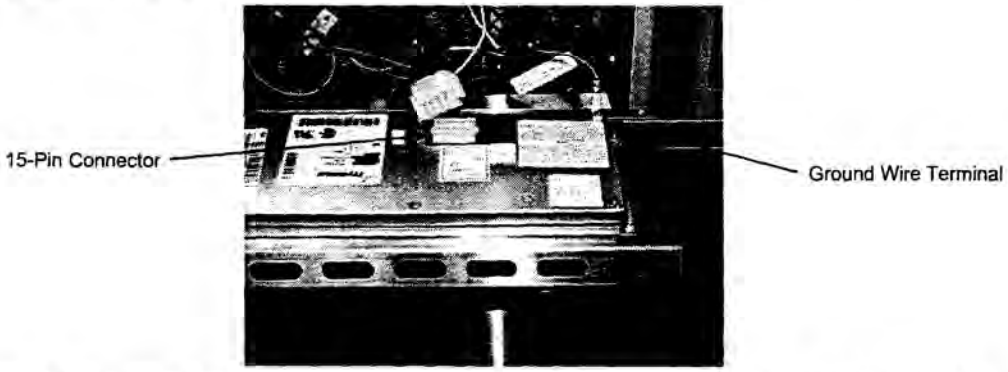

3. Remove the controller from the control panel assembly and install the replacement controller. Reinstall the control panel assembly by reversing steps 1 and 2.

7.3 Replacing Component Box Components

1. Remove the control panel (see steps 1 and 2 of section 7.2 on preceding page).

2. Unplug the wiring harness from the 15-pin connector on the interface board and disconnect the grounding wire from terminal adjacent to the 15-pin connector on the back of the controller. Remove the control panel assembly by lifting it from the hinge slots in the control panel frame.

3. Disconnect the wiring from the component to be replaced, being sure to make a note of where each wire was connected.

   NOTE: If replacing the interface board, connectors J1 and J2 must also be disconnected from the 12-pin connectors on the rear of the component box, directly behind the interface board.

4. Dismount the component to be replaced and install the new component, being sure that any required spacers, insulation, washers, etc. are in place.

   NOTE: If more room to work is required, the control panel frame and top cap assembly may be removed by removing the hex head screws that secure it to the fryer cabinet (see illustration below). If this option is chosen, all control panel assemblies must be removed per steps 1 and 2 above. The cover plate on the lower front of the component box may also be removed if desired. *Removing the component box itself from the fryer is not recommended due to the difficulty involved in disconnecting and reconnecting the oil-return valve rods, which pass through openings in the component box.*

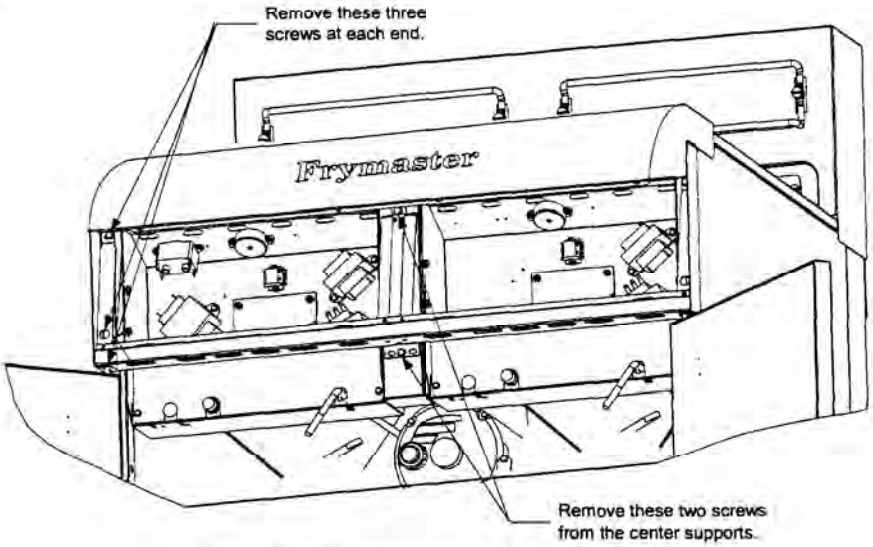

Removing the Control Panel Frame and Top Cap Assembly

5. Reconnect the wiring disconnected in step 3, referring to your notes and the wiring diagrams on the fryer door to ensure that the connections are properly made. Also, verify that no other wiring was disconnected accidentally during the replacement process.

6. Reverse steps 1 and 2 to complete the replacement and return the fryer to service.

7.4 Replacing a Temperature Probe or High-Limit Thermostat

1. Remove the filter pan and lid from the unit. Drain the frypots into a Shortening Disposal Unit (SDU) or other appropriate container.

> **⚠ DANGER**
> **DO NOT drain more than one full frypot into the SDU at one time.**

2. Disconnect the fryer from the electrical power supply and reposition it to gain access to the rear of the fryer.

3. Remove the tilt housing and back panels from the fryer. The tilt housing must be removed first in order to remove the upper back panel. To remove the tilt housing, raise the elements and allow them to rest on the basket support racks as shown in the photo below.

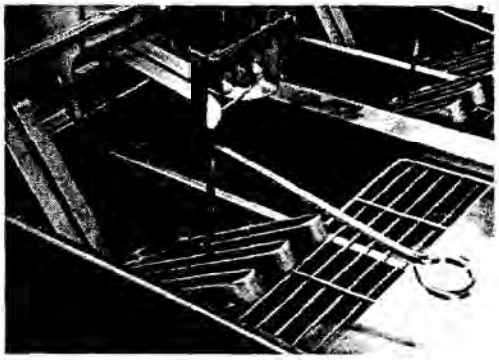

Next, remove the hex head screws from the rear edge of the housing. The housing can then be lifted straight up and off the fryer. Lift up on the upper back panel to disengage the tabs on its upper corners from the cutouts in the fryer frame.

4. Disconnect the wire harness at connector C6 and, using a pin pusher, disconnect the probe leads or high-limit leads from the connector.

5. ***If replacing a temperature probe***, remove the screw securing the probe bracket to the element and slide the bracket off the element and probe. Pull the probe out of the tilt housing assembly, install the replacement probe, and reattach the element bracket. Secure the upper portion of the probe with a replacement metal wire tie.

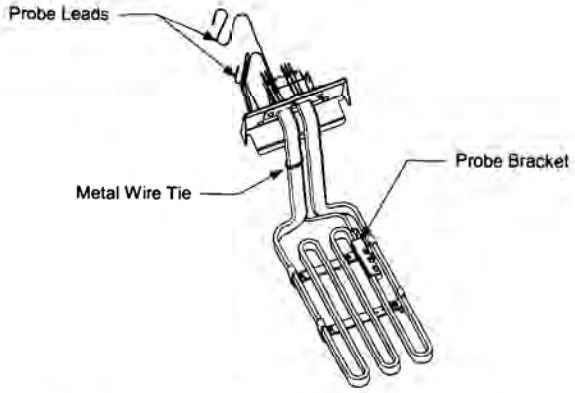

If replacing a high-limit thermostat, unscrew the thermostat to be replaced. Apply Loctite™ PST 567 or equivalent sealant to the threads of the replacement and screw it securely into the frypot.

6. ***If a temperature probe was replaced***, insert the probe leads into the connector (see left illustration below). For full-vat units or the left half (as viewed from the rear of the fryer) of a dual-vat unit, the red lead goes into position 6 and the white into position 7. For the right half of a dual-vat unit (as viewed from the rear of the fryer), the red lead goes into position 12 and the white into position 13.

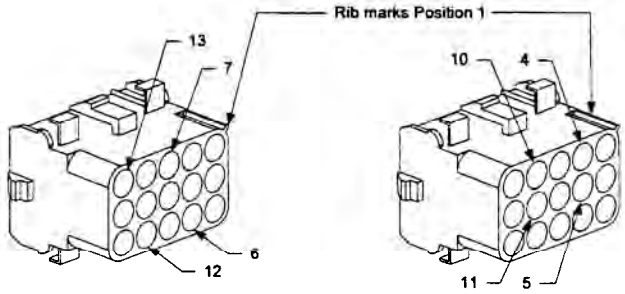

Probe Lead Positions High-Limit Lead Positions

If a high-limit thermostat was replaced, insert the leads into the connector (see right illustration above). For full-vat units or the left half of a dual-vat unit (as viewed from the rear of the fryer), the leads go into positions 4 and 5 of the connector. For the right half of a dual-vat unit (as viewed from the rear of the fryer), the leads go into positions 10 and 11. In either case, polarity does not matter.

7. Reinstall the back panels and tilt housing to complete the installation, then reverse steps 1 and 2 to return the fryer to service.

7.5 Replacing a Heating Element

1. Perform steps 1-3 of section 7.4, *Replacing a Temperature Probe*.

2. On dual-vat fryers, and on full-vat fryers where the temperature probe is attached to the element being replaced, disconnect the wire harness containing the probe wiring (connector C6). Using a pin pusher, disconnect the probe wires from the connector.

3. On the front of the contactor box, disconnect the 6-pin connector for the left element (as viewed from the front of the fryer) or the 9-pin connector for the right element and pull the harness out through the rear of the fryer. Press in on the tabs on each side of the connector while pulling outward on the free end to extend the connector and release the element leads (see photo below). Pull the leads out of the connector and out of the plastic wire loom.

4. Raise the element to the full up position and disconnect the element springs.

5. Remove the nuts and machine screws that secure the element to the tilt plate assembly and pull the element out of the frypot. **NOTE:** Full-vat elements consist of two dual-vat elements clamped together. For full-vat units, remove the element clamps before removing the nuts and machine screws that secure the element to the tilt plate assembly.

6. If applicable, recover the probe bracket and probe from the element being replaced and install them on the replacement element, then install the replacement element in the frypot, securing it with the nuts and screws removed in Step 5.

7. Route the element leads through the wire loom to prevent chafing and press the pins into the connector in accordance with the diagram below, then close the connector to lock the leads in place. **NOTE:** It is critical that the wires be routed through the loom to prevent chafing.

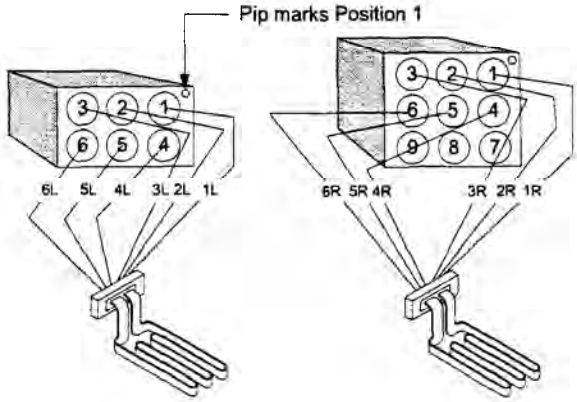

8. Insert the element connector into the receptacle on the front of the contactor box, ensuring that the latches lock.

9. If disconnected in step 2, insert the temperature probe leads into the wiring harness connector (see illustration below). For full-vat units or the right half of a dual-vat unit, the red lead goes into position 6 and the white into position 7. For the left half of a dual-vat unit, the red lead goes into position 12 and the white into position 13. **NOTE:** ***Right*** and ***left*** refer to the fryer as viewed from the rear.

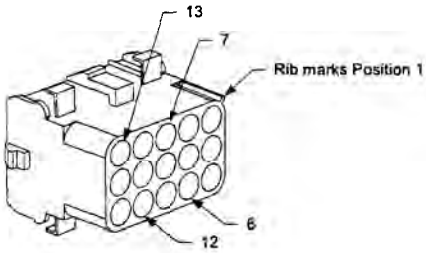

10. If disconnected in step 2, reconnect connector C6 of the wiring harness.

11. Reconnect the element springs and lower the element back down onto the basket rack.

12. Reinstall the tilt housing and back panels, reposition the fryer under the exhaust hood, and reconnect it to the electrical power supply.

7.6 Replacing Contactor Box Components

1. If replacing a contactor box above the built-in filter system, remove the filter pan and lid from the unit. Drain the frypots into a Shortening Disposal Unit (SDU) or other appropriate container. If replacing a contactor box in a non-filter unit, drain the frypot above the box into a Shortening Disposal Unit (SDU) or other appropriate container.

⚠ DANGER
DO NOT drain more than one full frypot into the SDU at one time.

2. Disconnect the fryer from the electrical power supply.

3. Unplug the wiring harnesses from the contactor box to be serviced.

4. Remove the two screws that secure the box in place.

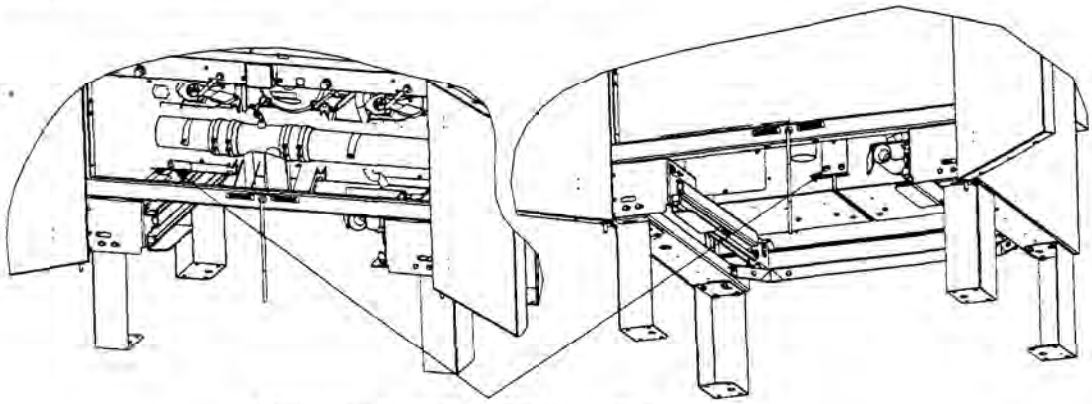

Remove these screws to dismount the left contactor box.
The right contactor box is secured in a similar manner.

5. Carefully lower the box to the floor and pull it out the front of the fryer. Remove the top cover to access contactors and other components.

6. After performing necessary service, reverse steps 1-5 to return the fryer to operation.

7.7 Replacing a Frypot

1. Drain the frypot into the filter pan or, if replacing a frypot over the filter system, into a Shortening Disposal Unit (SDU) or other appropriate container. If replacing a frypot over the filter system, remove the filter pan and lid from the unit.

⚠ DANGER
DO NOT drain more than one full frypot into the SDU at one time.

2. Disconnect the fryer from the electrical power supply and reposition it to gain access to both the front and rear.

3. Remove the two screws from the upper corners of the control panels and allow them to swing down (see illustration and photo on page 7-1).

4. Unplug the wiring harnesses and ground wires from the backs of the controllers. Remove the controllers by lifting them from the hinge slots in the control panel frame.

5. Remove the tilt housing and back panels from the fryer. The tilt housing must be removed first in order to remove the upper back panel. To remove the tilt housing, raise the elements and allow them to rest on the basket support racks (see photo on page 7-3).

   Next, remove the hex head screws from the rear edge of the housing. The housing can then be lifted straight up and off the fryer. Lift up on the upper back panel to disengage the tabs on its upper corners from the cutouts in the fryer frame.

6. Dismount the top cap by removing the hex head screws at each end that secure it to the control panel frame.

7. Remove the hex head screw that secures the front of the frypot to the cabinet cross brace.

8. Remove the top-connecting strip that covers the joint with the adjacent frypot.

9. Open the drain tube cleanout covers, unscrew the retainer nuts from the drain valve nipples, and remove the tube assembly from the fryer. (If replacing a frypot over the built-in filtration system, unscrew the vacuum-breaker tube fitting from the drain tube assembly also.)

10. Remove the covers from the drain safety switch(es) and disconnect the switch wiring at the switch(es).

11. At the rear of the fryer, unplug the C6 connector and, using a pin pusher, disconnect the high-limit thermostat leads.

12. Disconnect the oil return flexline(s) at the frypot end(s).

13. Raise the elements to the full up position and disconnect the element springs.

14. Remove the machine screws and nuts that secure the tilt plate and element assembly to the frypot. Carefully lift the tilt plate and element assembly from the frypot and secure it to the cross brace on the rear of the fryer with wire ties or tape.

15. Carefully lift the frypot from the fryer and place it upside down on a stable work surface.

16. Recover the drain valve(s), oil return flexline connection fitting(s), and high-limit thermostat(s) from the frypot. Apply Loctite™ PST 567 or equivalent sealant to the threads of the recovered parts and install them in the replacement frypot.

17. Carefully lower the replacement frypot into the fryer. Reinstall the hex head screw removed in step 7 to attach the frypot to the fryer.

18. Position the tilt housing and element assembly in the frypot and reinstall the machine screws and nuts removed in step 14.

19. Reconnect the oil return flexlines to the frypot, and replace aluminum tape, if necessary, to secure heater strips to the flexlines.

20. Insert the high-limit thermostat leads disconnected in step 11 (see illustration on page 7-4 for pin positions).

21. Reconnect the drain safety switch wiring to the switch(es) in accordance with the diagram below then reinstall the switch covers.

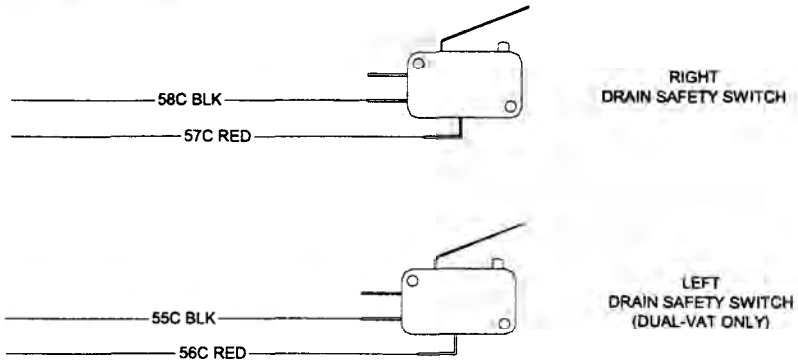

22. Reinstall the drain tube assembly.

23. Reinstall the tilt housing and back panels, top cap, and top connecting strip.

24. Reinstall controllers in the control panel frame and reconnect the wiring harnesses and ground wires.

25. Reposition the fryer under the exhaust hood and reconnect it to the electrical power supply.

7.8 Built-in Filtration System Service Procedures

7.8.1 Filtration System Problem Resolution

One of the most common causes of filtration problems is placing the filter paper on the bottom of the filter pan rather than over the filter screen.

⚠ CAUTION

Ensure that filter screen is in place prior to filter paper placement and filter pump operation. Improper screen placement is the primary cause of filtration system malfunction.

Whenever the complaint is "the pump is running, but no oil is being filtered," check the installation of the filter paper, and ensure that the correct size is being used. While you are checking the filter paper, verify that the O-ring on the bottom of the filter pan is present and in good condition. A missing or worn O-ring allows the pump to take in air and decreases its efficiency. Also, oil leaks on the floor each time a vat is drained.

If the pump motor overheats, the thermal overload will trip and the motor will not start until it is reset. If the pump motor does not start, press the red reset switch (button) located on the rear of the motor.

If the pump starts after resetting the thermal overload switch, then something is causing the motor to overheat. A major cause of overheating is when several frypots are filtered sequentially, thus overheating the pump and motor. Allow the pump motor to cool at least 30 minutes before resuming operation. Pump overheating can be caused by:

- Solidified shortening in the pan or filter lines, or
- Attempting to filter unheated oil or shortening (cold oil and shortening are more viscous, overloading the pump motor and causing it to overheat).

If the motor runs but the pump does not, there is a blockage in the pump. Incorrectly sized or installed paper/pads will allow food particles and sediment to pass through the filter pan and into the pump. When sediment enters the pump, the gears bind, causing the motor to overload, again tripping the thermal overload. Shortening that has solidified in the pump will also cause it to seize, with the same result.

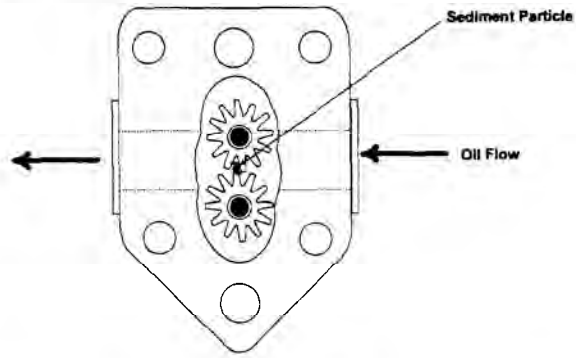

A pump seized by debris or hard shortening can usually be freed by manually moving the gears with a screwdriver or other instrument.

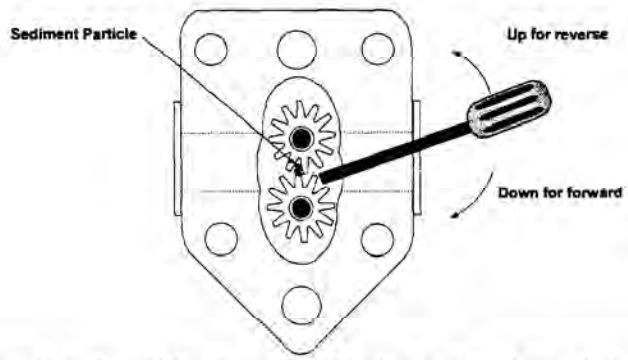

Disconnect power to the filter system, remove the input plumbing from the pump, and use a screwdriver to manually turn the gears.

- Turning the pump gears in reverse will release a hard particle.
- Turning the pump gears forward will push softer objects and solid shortening through the pump and allow free movement of the gears.

Incorrectly sized or installed paper/pads will also allow food particles and sediment to pass through and clog the suction tube on the bottom of the filter pan. Particles large enough to block the suction tube may indicate that the crumb tray is not being used. Pan blockage can also occur if shortening is left in the pan and allowed to solidify. Blockage removal can be accomplished by forcing the item out with an auger or drain snake. Compressed air or other pressurized gases should not be used to force out the blockage.

7.8.2 Replacing the Filter Motor, Filter Pump, and Related Components

1. Remove the filter pan and lid from the unit. Drain the frypots into a Shortening Disposal Unit (SDU) or other appropriate container.

⚠ DANGER
DO NOT drain more than one full frypot into the SDU at one time.

2. Disconnect the fryer from the electrical power supply and reposition it to gain access to both the front and rear.

3. Remove the two lower back panels, unplug the wiring harnesses from the contactor boxes, and remove the two screws that secure one of the boxes in place (it doesn't matter which one; see

illustration on page 7-6). **NOTE:** If you remove the screws from both boxes at the same time, the boxes will jam against each other and neither can be removed.

4. Carefully lower the box to the floor and pull it out the front of the fryer. Remove the remaining box following the same procedure.

5. Disconnect the two flexlines running to the oil-return manifold at the rear of the fryer. Remove the nut and bolt that secures the bridge to the oil-return manifold.

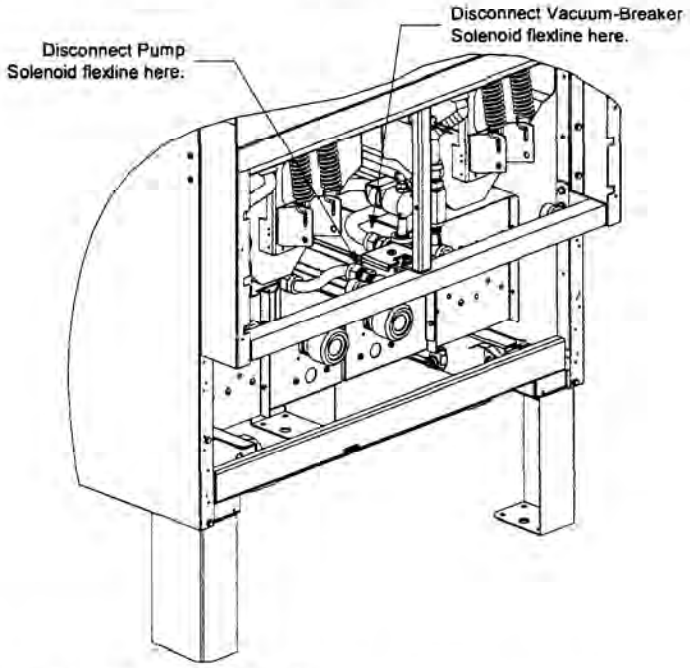

6. Disconnect the pump suction flexline at the filter pan connection end.

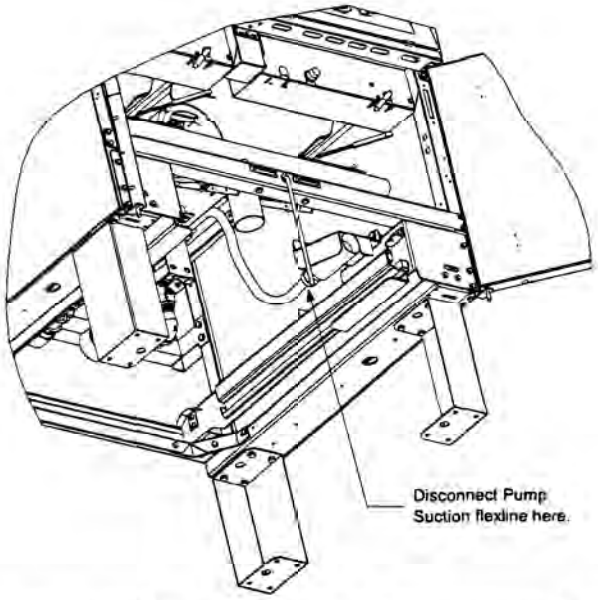

7. Remove the cover plate from the front of the motor and disconnect the motor wires.

8. Unplug the 15-pin connector from the rear of the left component box and, using a pin pusher, disconnect the solenoid valve wires (pins 4, 6, 10 and 12). **NOTE:** If the vacuum-breaker solenoid valve is connected to the manifold rather than the pump, its wires (pins 4 and 6) do not need to be disconnected.

9. Remove the two nuts and bolts that secure the front of the bridge to the cross brace and carefully slide the bridge rearward off the cross brace until its front end can be lowered to the floor. Be careful not to let the rear of the bridge slip off the manifold at this point. **NOTE:** In some early production units, the bridge will not slide far enough to the rear to clear the front brace. In such cases, the front brace must be removed. It is held in place by two hex head screws on each end and a nut and bolt inside the brace near each end.

10. Get a good grip on the bridge, carefully pull it forward off the oil-return manifold, and lower the entire assembly to the floor. Once on the floor, pull the assembly out the front of the fryer.

11. When required service has been completed, reverse steps 6-12 to reinstall the bridge. **NOTE:** The black motor wires go on the top terminal, the white on the bottom. The pump solenoid valve wires go in positions 10 and 12 of the 15-pin connector; the vacuum-breaker solenoid valve wires go in positions 4 and 6. In both cases, polarity does not matter.

12. Once the bridge is back in place, reverse steps 4 and 5 to reinstall the contactor boxes.

13. Reconnect the unit to the electrical power supply, and verify that the pump is functioning correctly (i.e., when a filter handle is placed in the ON position, the motor should start and there should be strong suction at the intake fitting and outflow at the power shower or rear flush port).

14. When proper operation has been verified, reinstall the back panels and the filter pan and lid, and return the fryer to service.

7.8.3 Replacing the Filter Transformer or Filter Relay

Remove the left controller from the fryer to expose the interior of the left component box. The filter transformer and relay are located as shown in the illustration below. **NOTE:** The right component box is identical to the left except that the filter transformer and relay are not present.

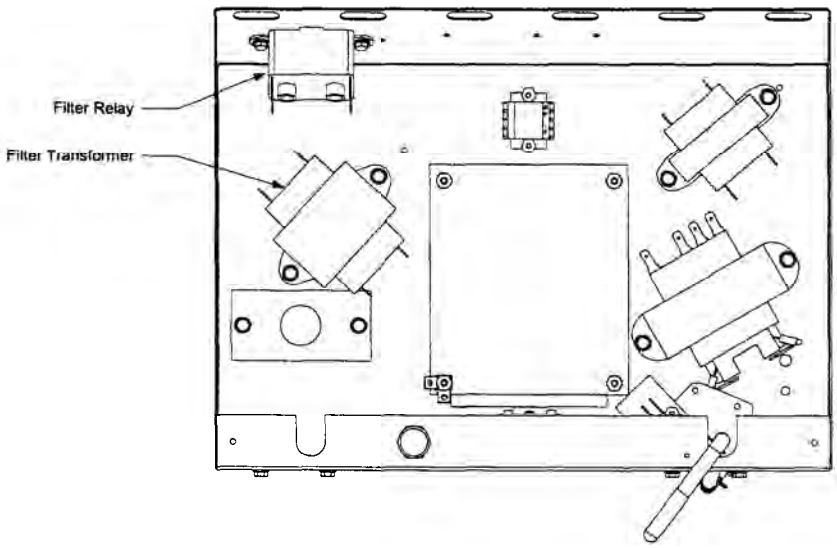

7.9 Interface Board Diagnostic Chart

The following diagram and charts provide ten quick system checks that can be performed using only a multimeter.

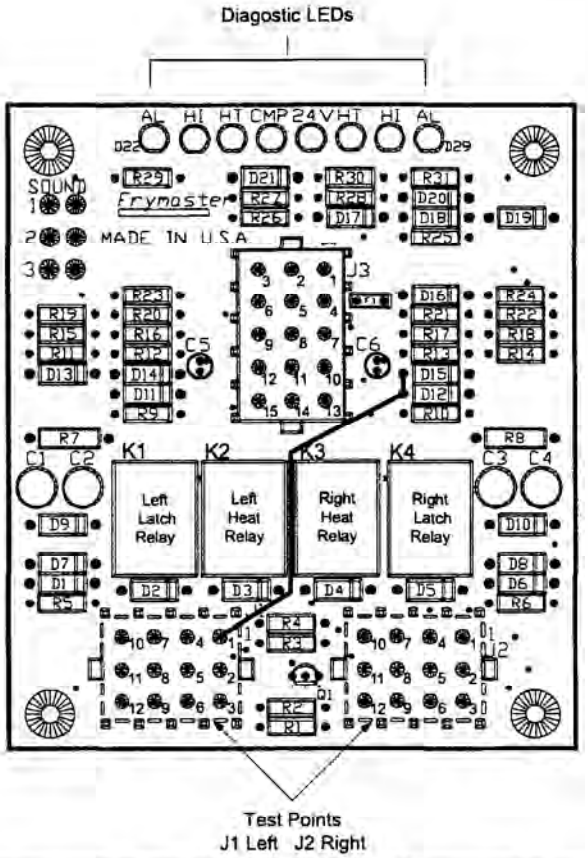

Diagnostic LED Legend

CMP	**indicates power from 12V transformer**
24	**indicates power from 24V transformer**
HI	**(RH) indicates output (closed) from right latch relay**
HI	**(LH) indicates output (closed) from left latch relay**
HT	**(RH) indicates output from right heat relay**
HT	**(LH) indicates output from left heat relay**
AL	**(RH) indicates output (open) from right latch relay**
AL	**(LH) indicates output (open) from left latch relay**

Meter Setting	Test	Pin	Pin	Results
12 VAC Power	50 VAC Scale	1 of J2	3 of J2	12-16 VAC
24 VAC Power	50 VAC Scale	2 of J2	Chassis	24-30 VAC
*Probe Resistance (RH)	R X 1000 OHMS	11 of J2	12 of J2	See Chart
*Probe Resistance (LH)	R X 1000 OHMS	3 of J1	2 of J1	See Chart
Hi-Limit Continuity (RH)	R X 1 OHMS	7 of J2	4 of J2	0 - OHMS
Hi-Limit Continuity (LH)	R X 1 OHMS	4 of J1	7 of J1	0 - OHMS
Latch Contactor Coil (RH)	R X 1 OHMS	8 of J2	Chassis	3-10 OHMS
Latch Contactor Coil (LH)	R X 1 OHMS	5 of J1	Chassis	3-10 OHMS
Heat Contactor Coil (RH)	R X 1 OHMS	9 of J2	Chassis	18-25 OHMS
Heat Contactor Coil (LH)	R X 1 OHMS	6 of J1	Chassis	18-25 OHMS

*** Disconnect 15-Pin harness from the computer/controller before testing the probe circuit.**

7.10 Wiring Diagram, System

H14SC/H17SC/H22SC kW Single Fryers and FPH17SC kW Filter System Fryers 440-480V, 60 Hz, 3-Ø, 3-Wire Configurations

Refer to page 2-2 for power requirements.

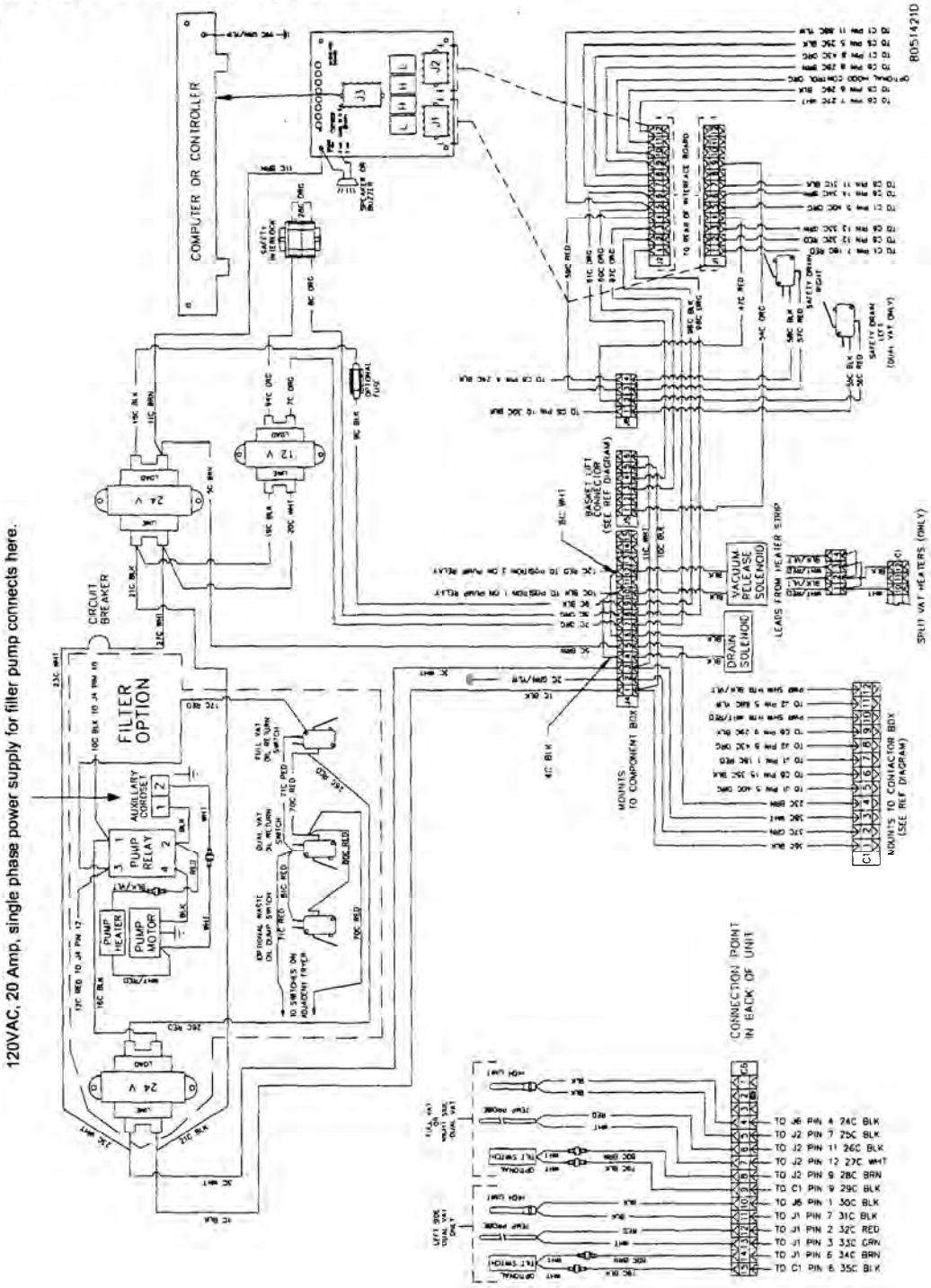

7.11 Wiring Diagram, Contactor Box

H14SC/H17SC/H22SC kW Single Fryers and FPH17SC kW Filter System Fryers 440-480V, 60 Hz, 3-Ø, 3-Wire Configurations

Refer to page 2-2 for power requirements.

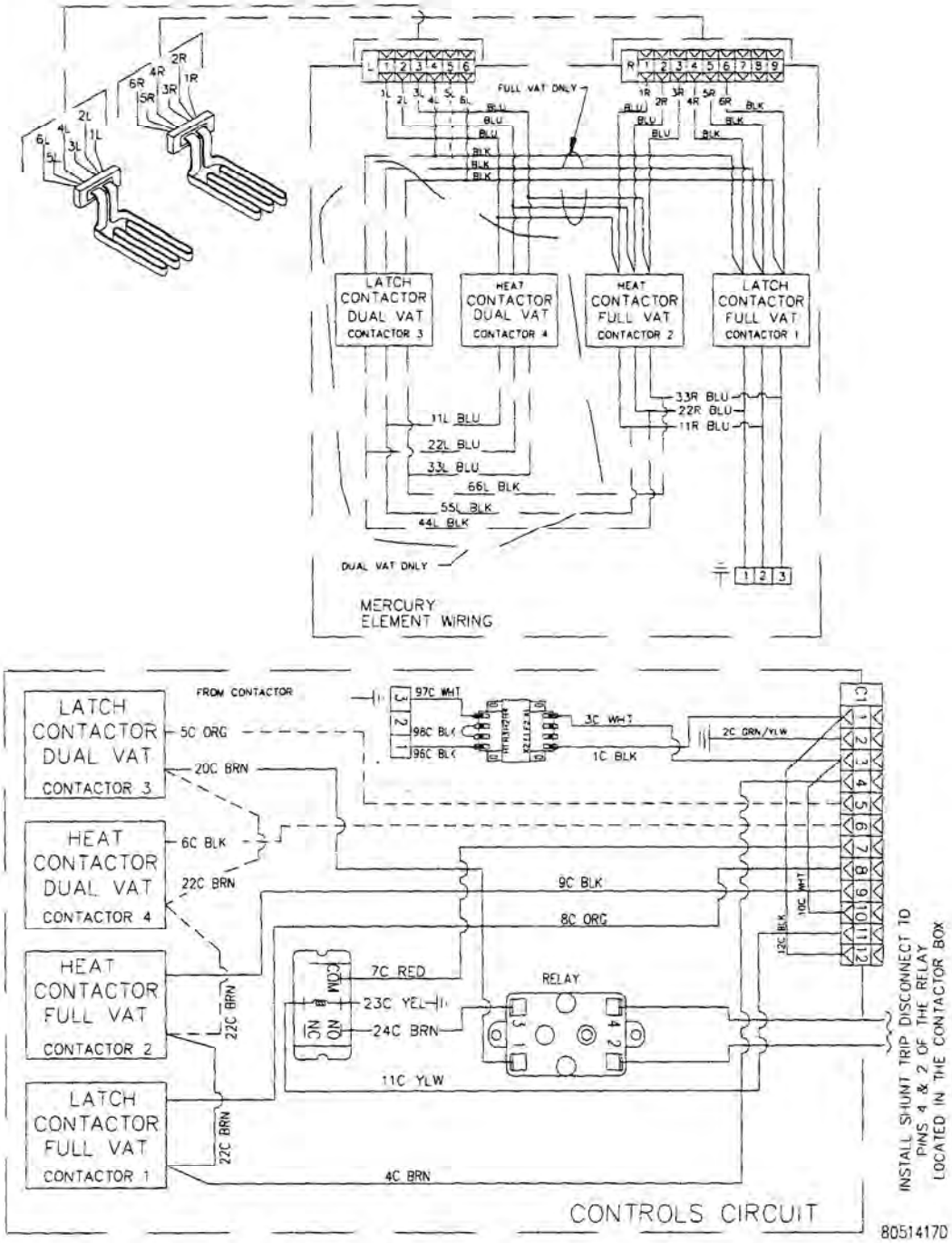

NAVY SURFACE SHIP ELECTRIC FRYERS
CHAPTER 8: PARTS LIST

8.1 Accessories

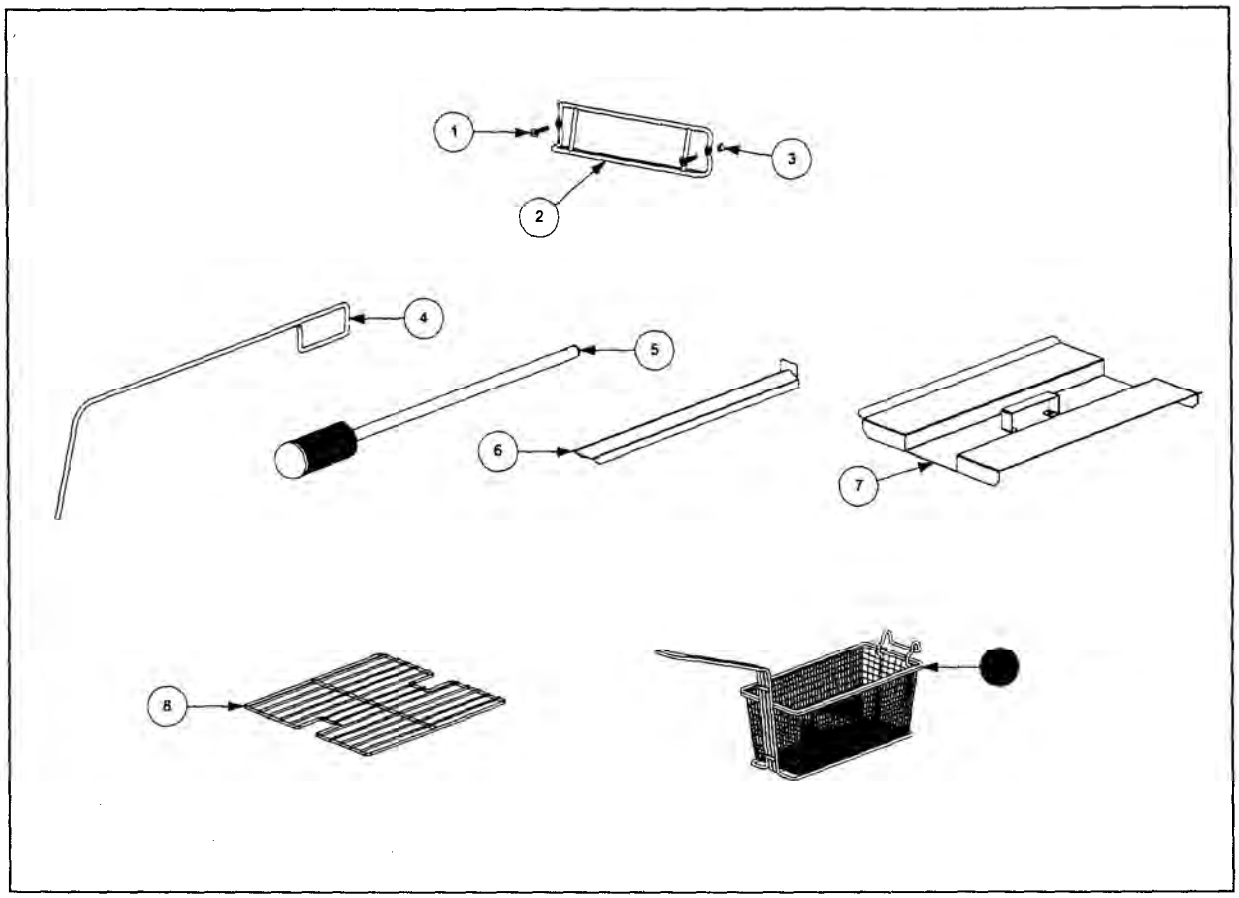

ITEM	STANDARD PART #	**EURO-LOOK PART #	COMPONENT
1	809-0171		Thumbscrew, ¼ -20 X $1^{3}/_{8}$-inch
2	810-2793		Hanger, Wireform Basket
3	809-0921		Spacer, Basket Hanger
4	803-0197		Cleanout Rod, 27-inch
5	803-0209		Brush, Frypot
6	823-1885		Connecting Strip, Frypot
7	806-4041		Cover, Full-Vat Frypot
8	803-0132		Rack, Full-Vat Basket Support
9	803-0271		Basket, Twin
*	812-1226SP		Drain Nipple 1¼-inch Painted
*	803-0002		Powder, Filter (80 1-Cup Applications)
*	803-0170		Paper, Filter (100-Sheet Pack)

* Not illustrated. Use standard part.

** Euro-Look fryers have rounded topcaps and round drains whereas, standard fryers have square drains and topcaps.

8.2 Cabinetry

8.2.1 Backs, Control Panels, Doors, Handles, Sides, Tilt Housings & Top Caps

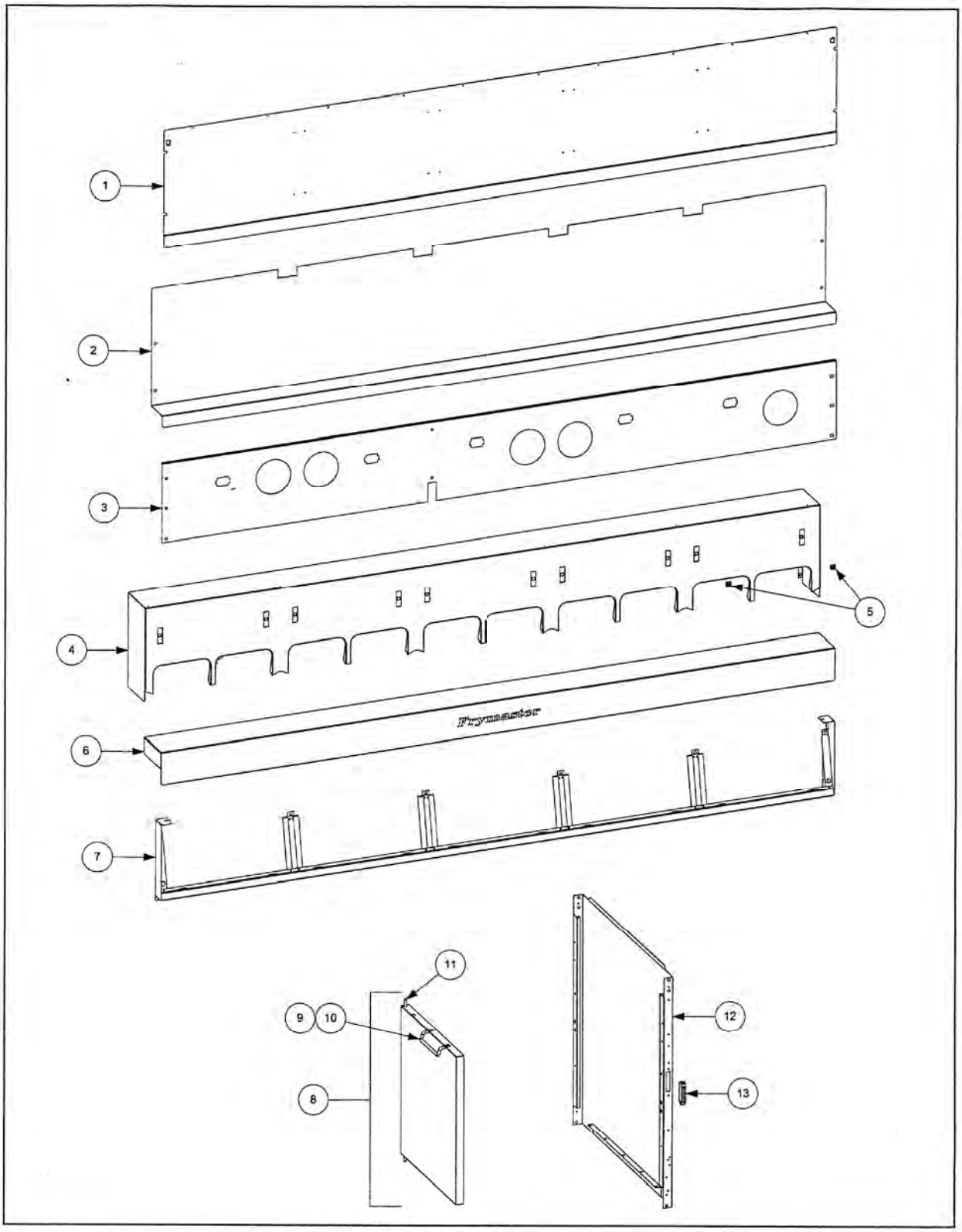

8.2.1 Backs, Control Panels, Doors, Handles, Sides, Tilt Housings & Top Caps (cont.)

ITEM	STANDARD PART #	EURO-LOOK PART #	COMPONENT
1	210-9367		Back Panel, Upper (Single)
	210-2299	200-6630	Two Station Fryer
	210-2380	200-6785	Three Station Fryer
	210-3490	200-6786	Four Station Fryer
	210-3670	200-6787	Five Station Fryer (Panel for five station fryer shown)
2	210-9336		Back Panel, Center (Single)
	210-2298	200-2298	Two Station Fryer
	210-2379	200-2379	Three Station Fryer
	210-3489	200-3489	Four Station Fryer
	210-3669	200-3669	Five Station Fryer (Panel for five station fryer shown)
3	210-9339		Back Panel, Lower (Single)
	210-4430	200-4426	Two Station Fryer
	210-4431	200-4427	Three Station Fryer
	210-4432	200-4428	Four Station Fryer
	210-4433	200-4429	Five Station Fryer (Panel for five station fryer shown)
4	824-1526		Tilt Housing (Single)
	824-1061	824-1303	Two Station
	824-1062	824-1335	Three Station
	824-1063	824-1336	Four Station
	824-1065	824-1337	Five Station (Housing for five station fryer shown)
5	826-1351	826-1351	Nut Retainer, ¼-20 (Pkg. of 10 – receives basket hanger thumbscrew)
6	106-5205	106-5195	Top Cap (Single) (Top cap for five station fryer shown)
	106-5206	106-5196	Two Station
	106-5207	106-5197	Three Station
	106-3036SP	106-5198	Four Station
	106-4441	106-5199	Five Station ***(Also requires ten 809-0078 10-32 Nutserts)***
7	106-4956		Frame, Control Panel (Frame for five station fryer shown)
	806-7172SP	106-4378	Two Station Fryer
	806-7173SP	106-4391	Three Station Fryer
	806-7174SP	106-4392	Four Station Fryer
	106-2171SP	106-4393	Five Station Fryer
8	806-6545SP	106-4397	Door, Left or Right (Left shown – move handle to opposite side for Right)
9	809-0266		Screw, #10 X ½-inch Phillips Truss Head
10	810-1422	210-6816	Handle, Wireform Door
11	806-4487SP		Pin Assembly, Door
*	826-1343		Spring, Door Pin (Pkg. of 10)
*	106-5008	106-4979	Door Assembly (Single)
12	210-4435		Side, Standard Cabinet Left or Right
*	211-8479		Side, Cabinet Single Left ***(Use 212-8479 for Rt. Side)***
13	810-2346	810-1105	Magnet, Door
			Handle (Grab Rail) ***(For handle end use 910-0915)***
*	823-0839	823-0839	One Station Fryer
*	823-2908	823-2908	Two Station Fryer
*	823-2901	823-4585	Three Station Fryer

* Not illustrated.

Use standard part.

8.2.2 Cabinet Bases, Braces, and Associated Parts

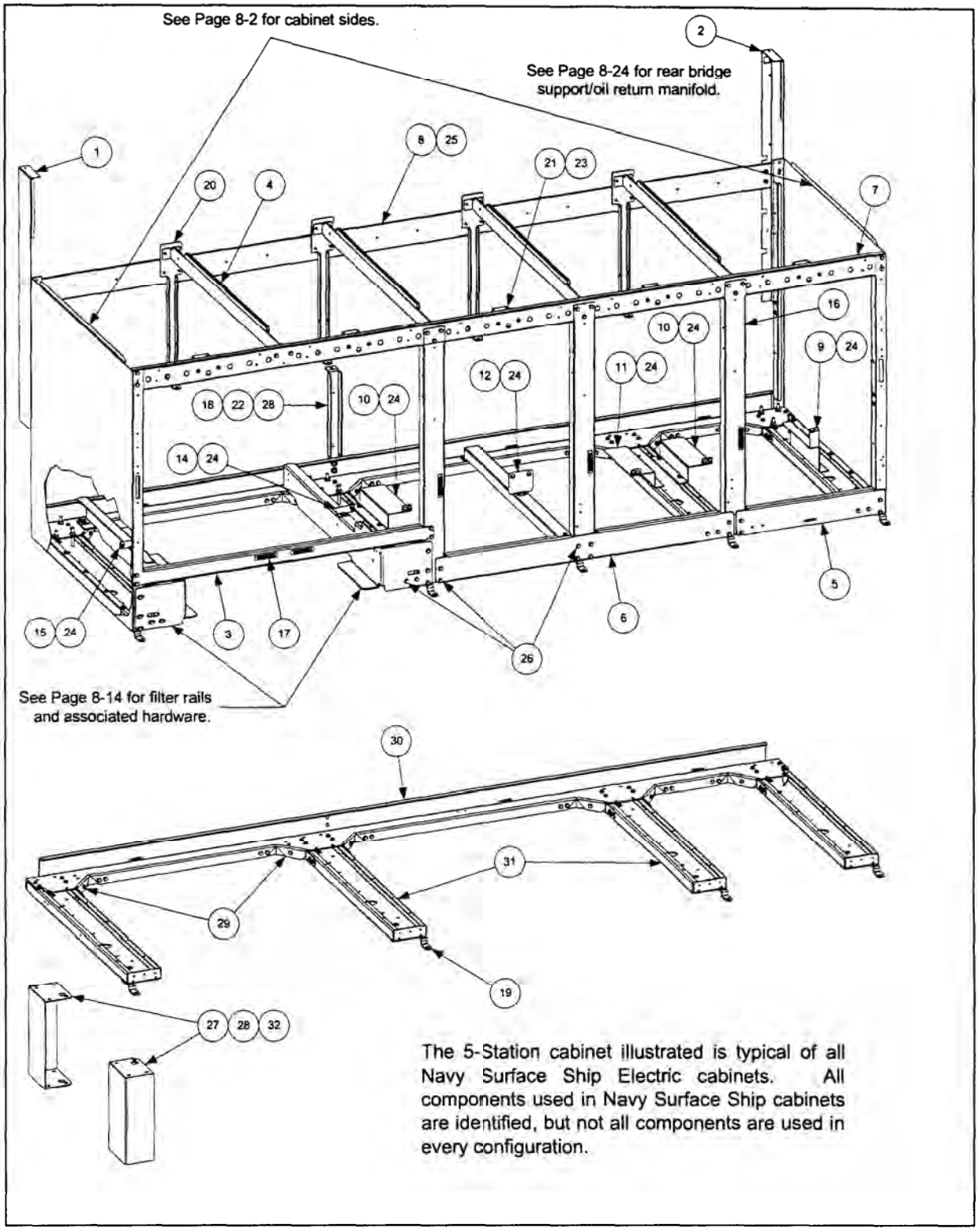

The 5-Station cabinet illustrated is typical of all Navy Surface Ship Electric cabinets. All components used in Navy Surface Ship cabinets are identified, but not all components are used in every configuration.

8.2.2 Cabinet Bases, Braces, and Associated Parts (cont.)

ITEM	STANDARD PART #	EURO-LOOK PART #	COMPONENT
1	106-1265		Upright Assembly, Left ***(Use 106-3828 for singles)***
2	106-1266		Upright Assembly, Right ***(Use 106-3829 for singles)***
3	200-1651		Support, Cross Cabinet
4	200-1659		Divider, Cabinet
5	200-2293		Brace, Single Station Lower
6	200-3774		Brace, Double Station Lower
7			Brace, Front Horizontal ***(Use 200-7036 for singles)***
	200-2331		Two-Station Fryer
	200-2296		Three-Station Fryer
	200-2733		Four-Station Fryer
	200-3590		Five-Station Fryer
8			Brace, Rear Horizontal ***(Use 200-5356 for singles)***
	200-2284		Two-Station Fryer
	200-2295		Three-Station Fryer
	200-2725		Four-Station Fryer
	200-3592		Five-Station Fryer
9	200-4422		Support, Contactor Box Right Station 3 or Station 5
10	201-4425		Support, Contactor Box Left Station 4 or Station 5
11	202-4425		Support, Contactor Box Right Station 3
12	200-4423		Support, Contactor Box Stations 3 and 4
13	200-4447		Support, Contactor Box Front to Rear
14	201-5369		Support, Contactor Box Station 2
15	202-5369		Support, Contactor Box Station 1
*	200-6498		Support, Contactor Box (Singles)
16	200-4424		Post, Door
17	810-2346		Magnet, Door
18	200-4786		Support, Oil Return Manifold
19	210-5595		Hinge, Door ***(Use 210-6862 for singles)***
20	210-1490		Bracket, Rear Support
21	900-1224		Bracket, Frypot
22	826-1389		Bolt, ¼-20 X ¾-inch Hex Head (Pkg. of 10)
23	826-1371		Screw, #8 X ½-inch Drill Point Hex Head (Pkg. of 25)
24	826-1330		Screw, 10-32 X ⅜-inch Slotted (Pkg. of 25, used to attach contactor box)
25	826-1376		Nut, 10-32 Keps Hex (Pkg. of 10)
26	826-1374		Screw, #10 X ½-inch Hex Washer Head (Primary cabinet screw) Qty 25
27	809-0417		Nut, ¼-20 Hex Flange (used with item #22)
28	809-0429		Bolt, ¼-20 X 2-inch Hex Head
29	200-5417		Brace, Rear Channel Corner
30			Channel, Base Rear ***(Use 106-4901 for singles base assembly)***
	200-5463		Two-Station Fryer
	200-5538		Three-Station Fryer
	200-5537		Four-Station Fryer
	200-5536		Five-Station Fryer
31	824-1131		Channel, Base Side
32	823-4386		Leg, Navy Shipboard (Mounts with Items 27 and 28)

Use Standard part.

8.3 Drain System Components

8.3.1 Drain Tube Sections and Associated Parts

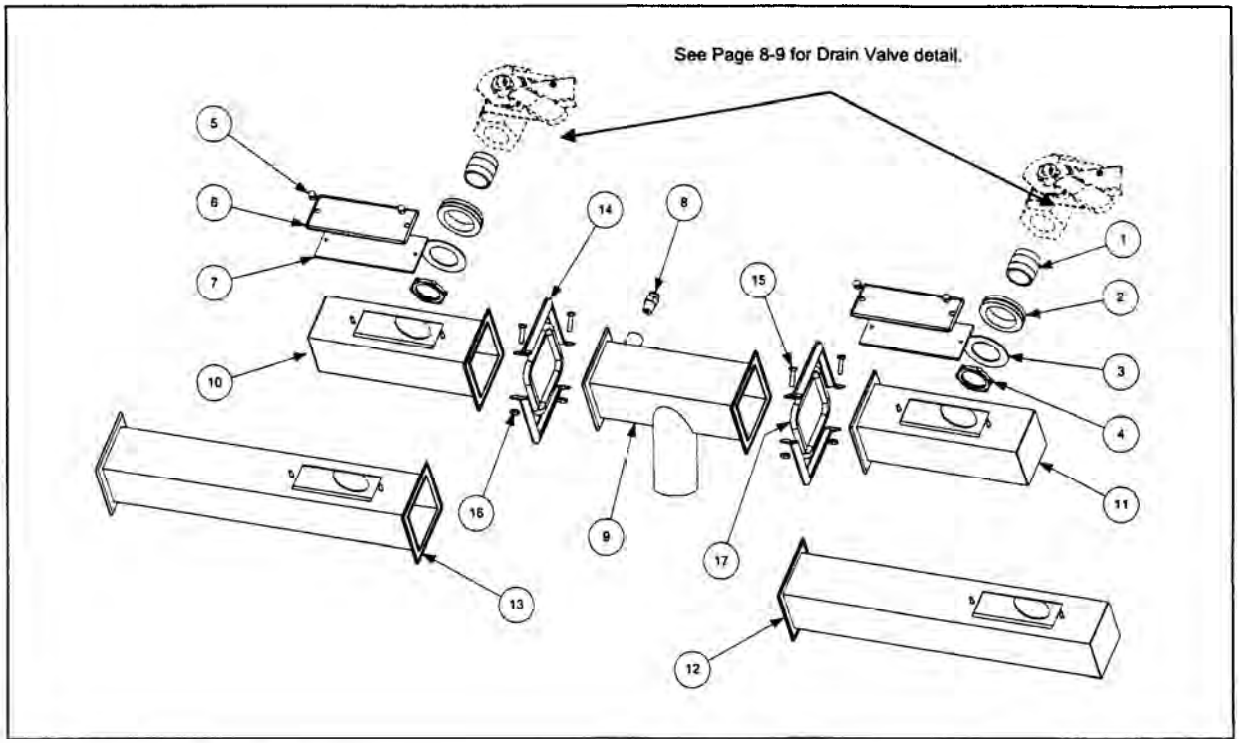

ITEM	STANDARD PART #**	COMPONENT
1	813-0284	Nipple, ¾ X 1-inch NPT
2	816-0092	Grommet, 1-inch Drain
3	826-1345	Washer, 1-inch Drain (Pkg. of 25)
4	809-0347	Nut, 1-inch NPT Retainer
5	809-0893	Nut, 8-32 High Crown Acorn
6	826-1348	Cover, Drain Cleanout (Pkg. of 5)
7	816-0021	Gasket, Drain Cleanout
8	810-2492	Fitting, Quick-Connect Straight (receives Teflon vent tube)
9	823-3229	Drain Outlet
10	823-3380	Drain Tube, Left End
11	823-1549	Drain Tube, Right End Short
12	823-1508	Drain Tube, Right End Long
13	823-0717	Drain Tube, Open End Long
14	810-0396	Clamp, Square Drain
15	826-1375	Screw, 10-32 X ¾-inch Hex Head (Pkg. of 5)
16	826-1376	Nut, 10-32 Keps Hex (Pkg. of 10)
17	816-0032	Gasket, Square Drain
*	826-0877	Kit, Square Drain Clamp (2 each of Items 14-16 and 1 of Item 17)
*	811-1071	Tube, Teflon Vent ¼-inch OD

* Not illustrated.

** See page 8-8 for a *Euro-Look* parts list.

8.3.1.1 Euro-Look Drain Tube Section and Associated Parts

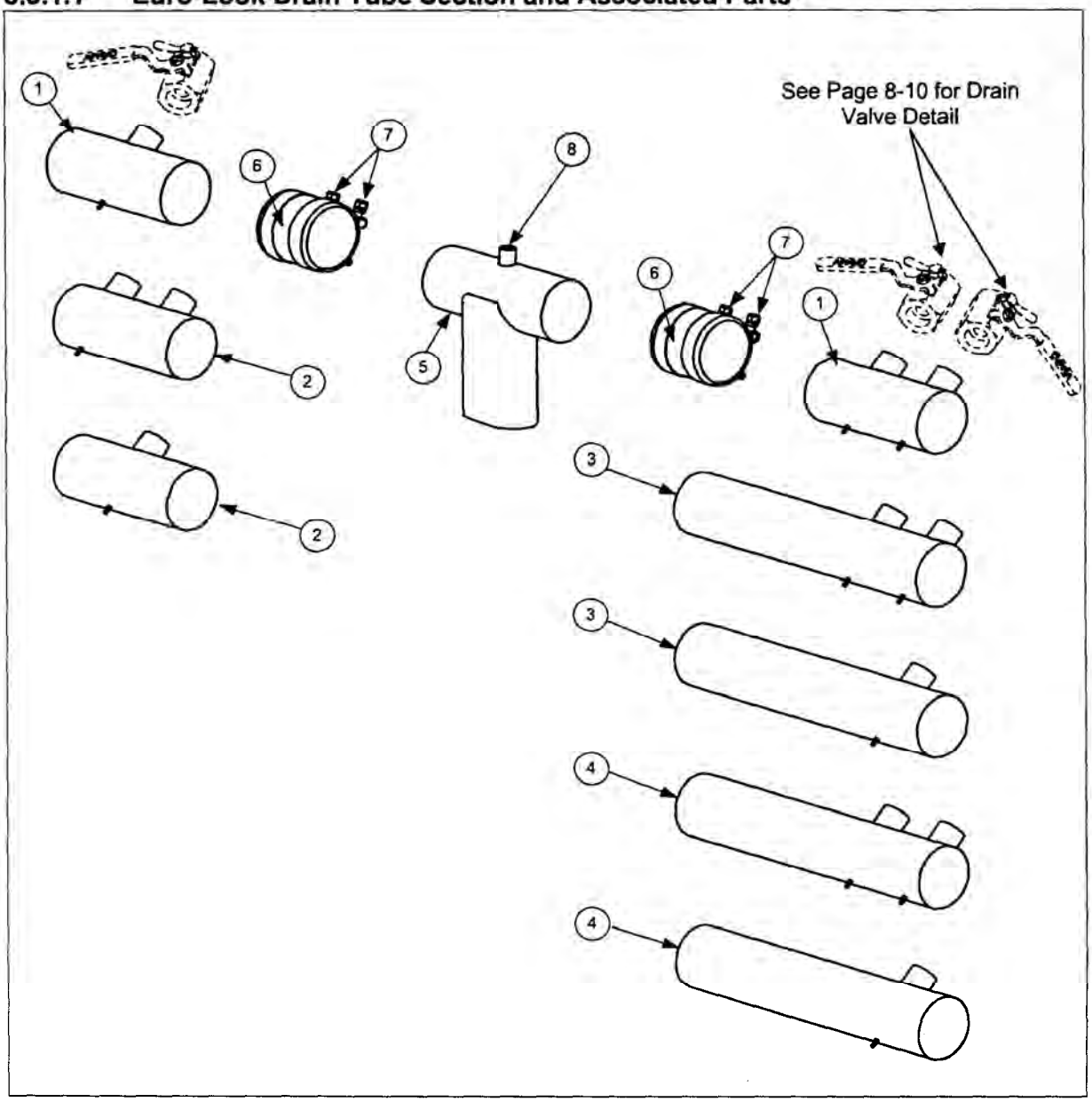

8.3.1.1 Euro-Look Drain Tube Section and Associated Parts (cont.)

ITEM	EURO-LOOK PART# **	COMPONENT
1		Drain Tube, Left/Right End Short
	823-4625	Full-Vat 3"
	823-4624	Dual-Vat 3"
2		Drain Tube, Left/Right Open Short
	823-4643	Full-Vat 3"
	823-4642	Dual-Vat 3"
3		Drain Tube, Right End Long
	823-4639	Full-Vat 3"
	823-4638	Dual-Vat 3"
4		Drain Tube, Left/Right Open Long
	823-4641	Full-Vat 3"
	823-4640	Dual-Vat 3"
5	823-4892	Drain Outlet Center Dump
6	816-0625	Sleeve 3"
7	809-0969	Clamp, 3" T-Bolt
8	810-2492	Fitting, Quick-Connect Straight (receives Teflon vent tube)
*	KIT6033	Kit, Round Drain Clamp (2 or Item 7 and 1 of Item 6)
*	811-1071	Tube, Teflon Vent ¼-inch OD

* Not illustrated.

** See page 8-6 for a standard parts list.

8.3.2 Drain Valve Assembly and Component Parts

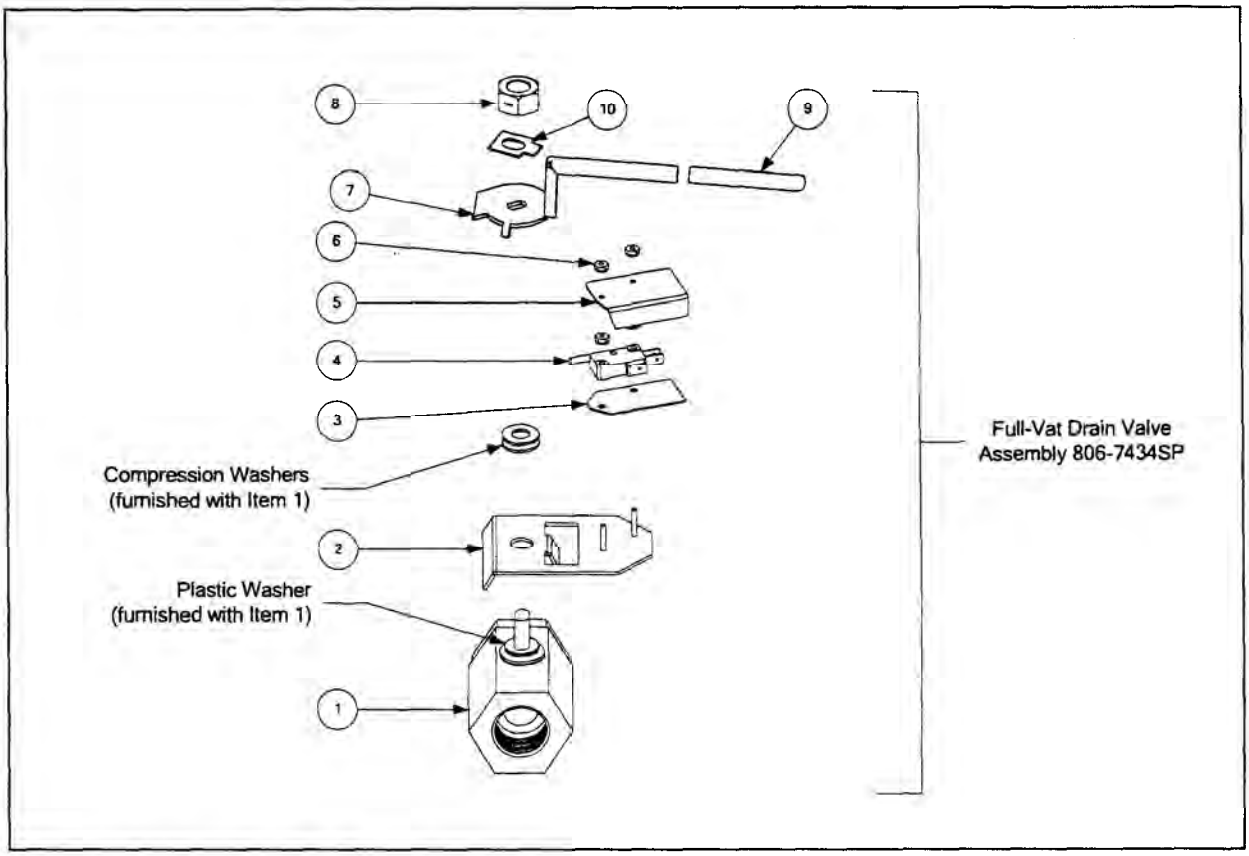

ITEM	STANDARD PART #**	COMPONENT
1	810-1020	Valve, 1-inch Full-Vat Drain
2	806-8137	Bracket Assembly, Full-Vat Drain Safety Switch
3	816-0220	Insulation, Drain Safety Switch
4	807-2103	Microswitch, CE Straight Lever
5	901-2348	Cover, Dual Vat Drain Safety Switch
6	826-1366	Nut, 4-40 Keps Hex (Pkg. of 25)
7	824-1602	Handle, Full-Vat Drain Valve
8	809-0540	Nut, ½-13 2-Way Hex Lock
9	816-0639	Sleeve, Red Handle
10	900-2936	Retainer, Nut Drain Valve FV
*	806-6993SP	Valve, 1 ¼-inch Drain Assembly (Includes handle and sleeve)
*	823-1168	Valve, 1 ¼-inch Drain Assembly with bracket (used on non-filter fryers)
*	WIR0572	Wire Bundle, Drain Safety Switch

* Not illustrated.

* See page 8-11 for a *Euro-Look* parts list.

8.3.2.1 Euro-Look Drain Valves and Associated Parts (Units with Built-In Filtration)

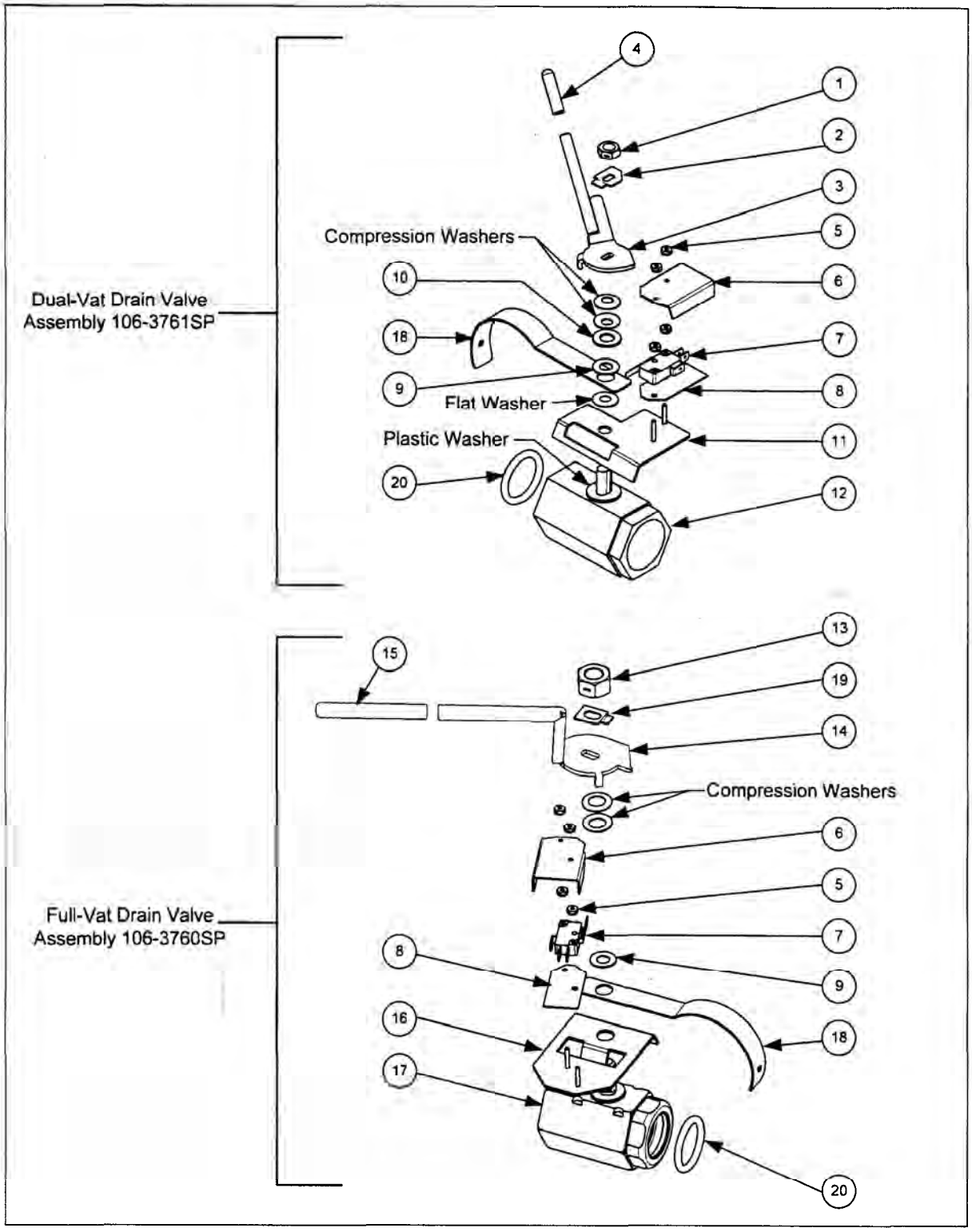

8.3.2.1 Euro-Look Drain Valves and Associated Parts (Units with Built-In Filtration) cont.

ITEM	EURO-LOOK PART#**	COMPONENT
1	809-0539	Nut, ⅜-16 2-Way Hex Lock
2	900-2934	Retainer, Dual-Vat Drain Valve Nut
3	823-5369	Handle, Dual-Vat Drain Valve
4	810-0677	Grip, Drain Handle
5	826-1366	Nut, 4-40 Keps Hex (Pkg. of 25)
6	901-2348	Cover, Dual Vat Drain Safety Switch
7	807-2103	Microswitch, CE Straight Lever
8	816-0220	Insulation, Drain Safety Switch
9	810-1165	Washer, Teflon Drain Valve
10	809-0196	Washer, ⅜-inch Flat
11	106-2671	Bracket Assembly, Dual-Vat Drain Safety Switch
12	810-1114	Valve, 1-inch Dual-Vat Drain
13	809-0540	Nut, ½-13 2-Way Hex Lock
14	824-1602	Handle, Full-Vat Drain Valve
15	816-0639	Sleeve, Red Handle
16	806-8137	Bracket Assembly, Full-Vat Drain Safety Switch
17	810-1018	Valve, 1.25-inch Full-Vat Drain
18	200-6496	Support, 3" Drain
19	900-2936	Retainer, Full-Vat Drain Valve Nut
20	816-0135	Round Drain O-Ring
*	WIR0572	Wire Bundle, Drain Safety Switch

* Not illustrated.

** See page 8-9 for a standard parts list.

8.4 Electronics and Wiring Components

8.4.1.1 Single Component Box

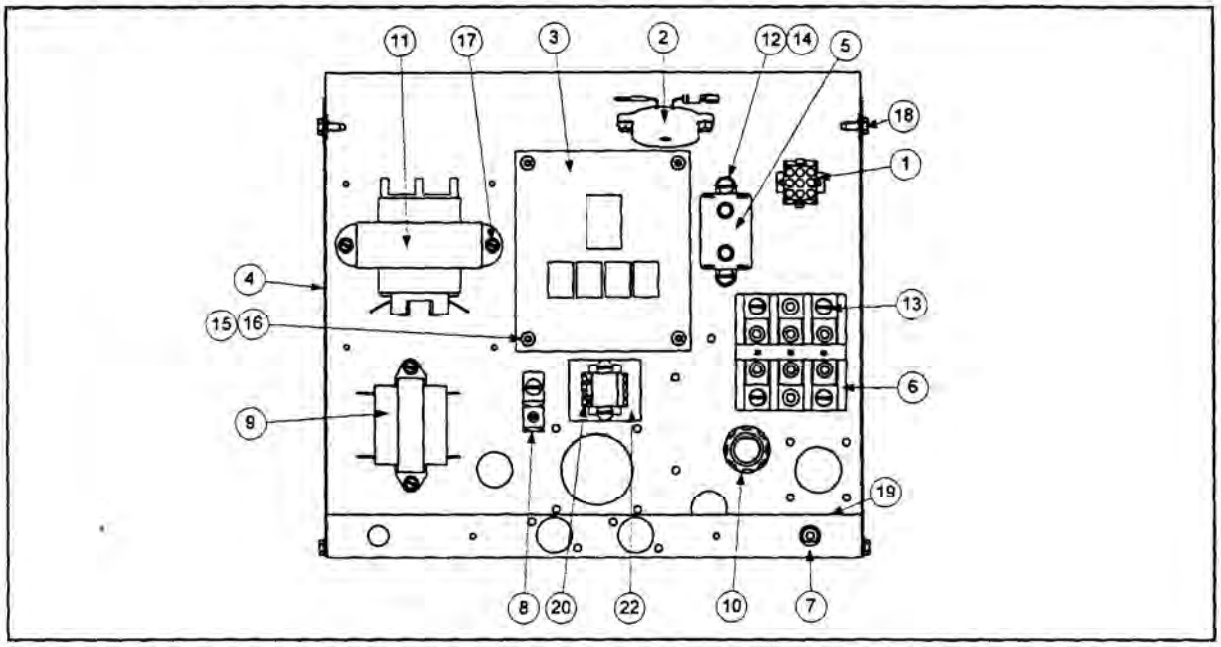

ITEM	STANDARD PART #	EURO-LOOK PART #	COMPONENT
	106-0580		Component Box Assembly Single Navy
1	106-0313		Wire Assembly, Component SFP120
2	806-7179SP		Sound Device
3	806-7935		PCB Assembly, Interface
4	806-9559		Component Box W/ Studs
5	807-0012		Relay, 18AMP 1/3 HP 24V Coil
6	807-0065		Block, Terminal
7	807-0069		Circuit Breaker, 10A
8	807-0070		Terminal, Ground Lug
9	807-0855		Transformer, 120V 50/60 – 12V 20A
10	807-1612		Clamp, 3/8 Connector Type (Thin Screw)
11	807-2181		Transformer, Power 100-120V/24V 62VA
12	809-0102		Screw, 8 – 32 x 3/8 TR SL HD ZP
13	809-0104		Screw, 8 – 32 x ½ TR SL HD ZP
14	809-0247		Nut, 8 – 32 Hex KEPS ZP
15	809-0250		Nut, 6 – 32 Hex KEPS ZP
16	809-0349		Spacer, 4mm x 6mm Aluminum
17	809-0360		Screw, 8 x 3/8 Type 8 Hex Washer SL HD ZP
18	826-1374		Screw, #10 – ½ Hex Head (Pkg. of 25)
19	810-0045		Bushing, .875 Dia Hole 11/16
20	810-1164		Block, 1 Plc Screwless Terminal
21	812-0368		Conduit, Flex 3/8"
22	816-0217		Paper, Insulating Terminal Block CE
23	WIR-0428		Wire Assembly, Navy SFP Component
24	WIR-0581		Wire Assembly, Transformer 440V

Use standard part.

8.4.1.2 Multiple Vat Component Boxes

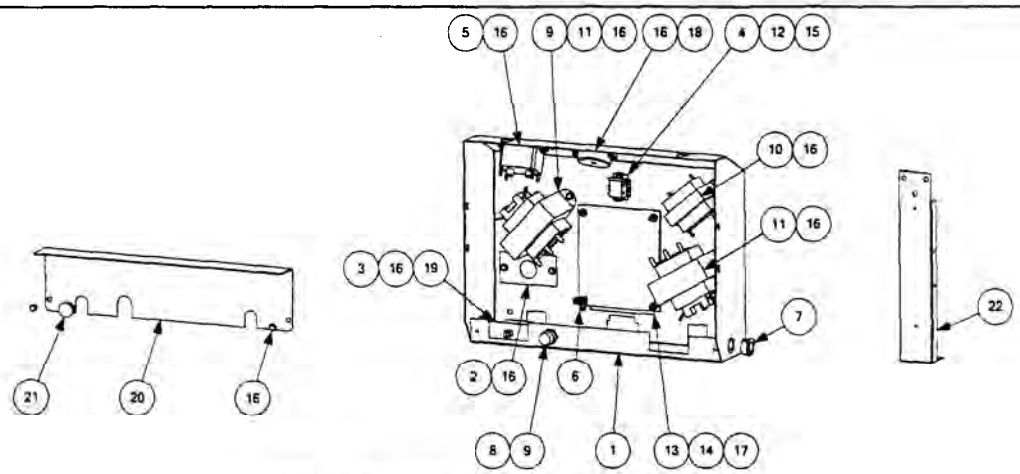

NOTE 1: The transformer on the left side of the component box (Item 11) is present only in the left component box.

NOTE 2: See Page 8-20 for Component Box 15-Pin Wiring Harnesses.

ITEM	STANDARD PART #	EURO-LOOK PART #	COMPONENT
	106-2458		Assembly, Component Box w/ filter
	106-2449		Assembly, Component Box without filter
1	106-1531		Box, Component
2	200-3300		Bracket, Component Box Strain Relief
3	200-3746		Bracket, Circuit Breaker
4	806-9495SP		Terminal Block and Wire Assembly
5	807-0012		Relay, 18 Amp ⅓ HP 24V Coil
6	826-1337		Terminal, ¼-inch Push-on (Pkg. of 5)
7	807-0121		Bushing, Heyco Plastic AB-625-500
8	807-1321		Holder, AGC Panel-Mount ¼-inch Fuse
9	807-1597		Fuse, 3 Amp Slow-Blow
10	807-0855		Transformer, 100-120V/24V 20VA
11	807-2181		Transformer, 100-120V/12V 60VA
12	826-1366		Nut, 4-40 Keps Hex (Pkg. of 25)
13	809-0250		Nut, 6-32 Keps Hex
14	809-0349		Spacer, 4mm X 6mm Aluminum
15	826-1359		Screw, 4-40 X ¾-inch Slotted Round Head (Pkg. of 25)
16	809-0359		Screw, #8 X ¼-inch Hex Washer Head
17	806-7935		Interface Board
	807-3932		Relay, 12VDC SPDT 12 Amp
18	806-7179SP		Sound Device
19	807-0069		Circuit Breaker, 10 Amp
20	200-3844		Guard, Finger
21	810-2445		Plug, Button
22	200-3243		Brace, Component Box
*	106-2400		Handle Assembly, FPP Power Shower FV

*Not illustrated.

Use standard part.

8.4.2.1 Single Contactor Box

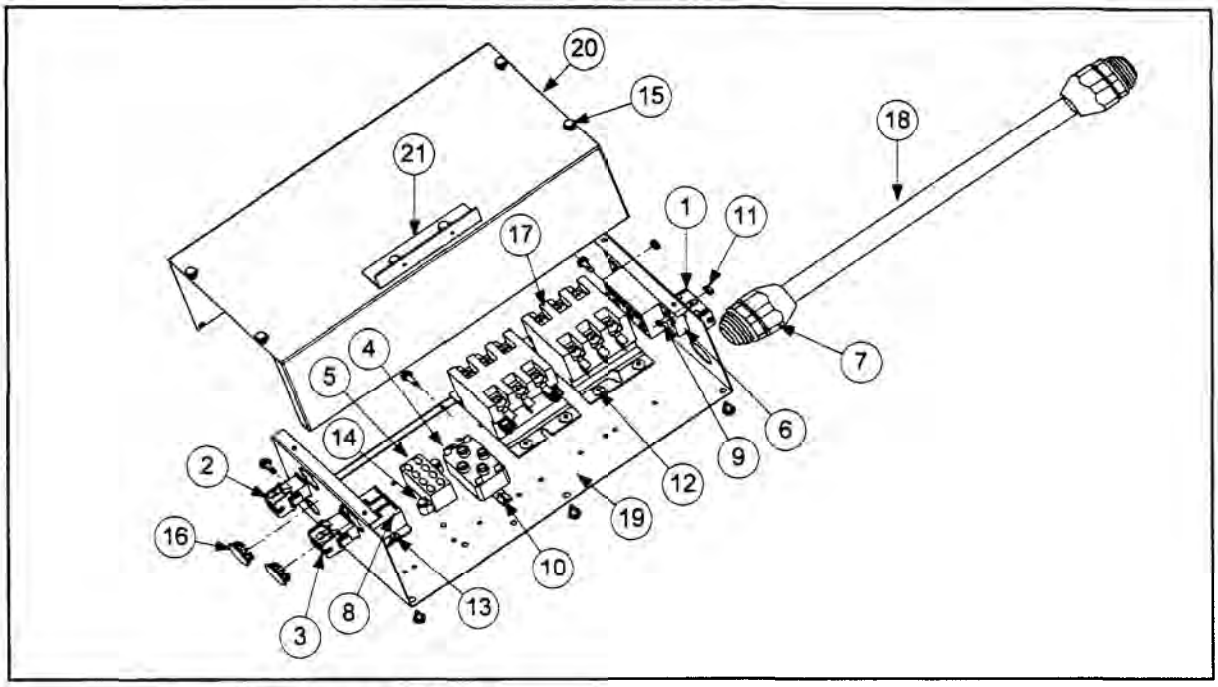

ITEM	STANDARD PART #	EURO-LOOK PART #	COMPONENT
	106-0581		Box, Assembly Contactor Single Navy
1	106-0595		Wire Assembly, CI Single FP
2	806-9628SP		Wire Assembly, HV DV LT Contactor Single
3	806-9629SP		Wire Assembly, HV DV RT Contactor Single
4	807-0012		Relay, 18 AMP 1/3 HP 24V Coil
5	807-0067		Block, Terminal 8 Pin
6	807-0878		Block, Terminal 3 Lug 12 P
7	807-1338		Fitting, Plastic ¾ Dia Conduit
8	807-1683		Relay, 12 VDC
9	809-0096		Screw, 6 – 32 x ⅝ Bindings SL HD ZP
10	809-0102		Screw, 8 – 32 x ⅜ TR HD ZP
11	809-0250		Nut, 6 – 32 KEPS HX ZP
12	809-0266		Screw, 10- ½ Phil TR HD ZP
13	809-0360		Screw, 8 x ⅜ HX Washer SL HD ZP
14	809-0362		Screw, Drill #8 x 1 ¼ Hex Washer HD ZP
15	826-1374		Screw, #10-½ Hex Head (Pkg. of 25)
16	810-0044		.875 Plug Button
17	810-1202		Contactor, 40 AMP 600V 3 Pole
18	812-0971		Conduit, ¾ x 12 LG Flexible
19	900-8608		Box, Contactor Common El. Single FP
20	900-8609		Cover, Contactor Box Common El. Single FP
21	900-8647		Bracket, Contactor Box Single FP
22	WIR0427		Wire Assembly, Navy Single FP

Use standard part.

8.4.2.2 Multiple Vat Contactor Boxes

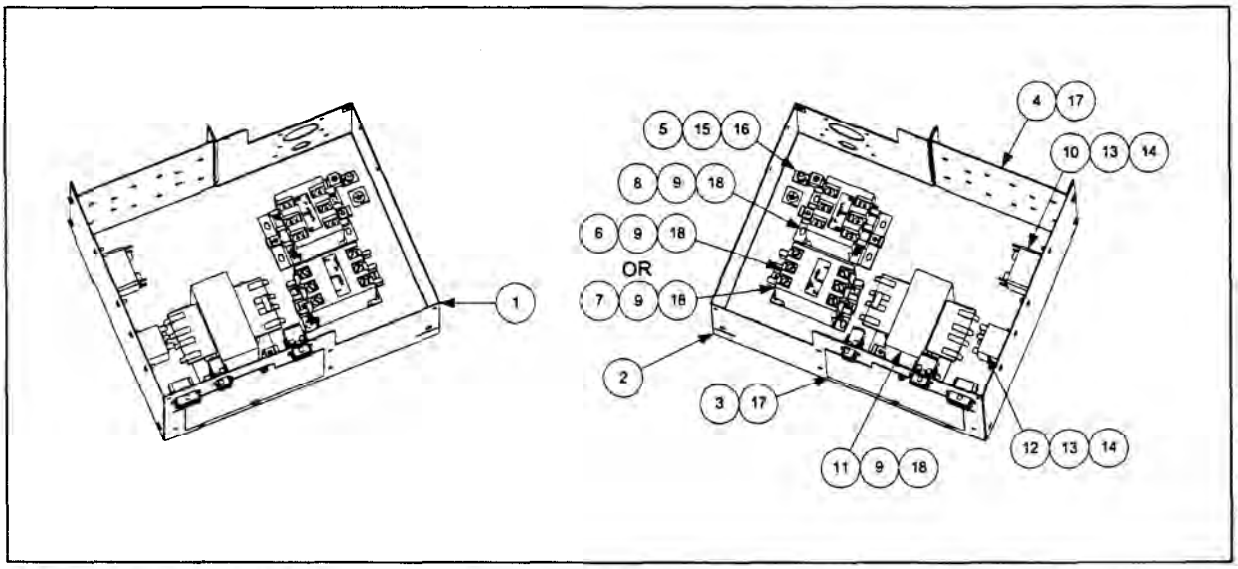

NOTE 1: Left and right contactor box assemblies are mirror images of one another. With the exception of the box itself, all components of a left-hand assembly, including the lid, are the same as those in the corresponding right-hand assembly and vice versa.

NOTE 2: See Page 8-18 and 8-19 for Contactor Box Wiring Assembly

ITEM	STANDARD PART #	EURO-LOOK PART #	COMPONENT
	106-2440		Assembly, Contactor Box Left ***(Use 106-2442 for H22)***
	106-2441		Assembly, Contactor Box Right ***(Use 106-2443 for H22)***
1	106-1536		Box, Left Contactor
2	106-1537		Box, Right Contactor
3	200-4712		Door, Contactor Box w/o Hinge
4	200-2337		Bracket, Contactor Box
5	807-0070		Terminal, Ground Lug
6	807-2284		Contactor, 24V 50 Amp Mechanical *(used in 14 & 17kW units only)*
7	807-2283		Contactor, 24V 63 Amp Mechanical *(used in 22kW units only)*
8	810-1202		Contactor, 24V 40 Amp 3-Pole
9	809-0448		Clip, Tinnerman
10	807-0012		Relay, 18 Amp ⅓ HP 24V Coil
11	807-0064		Transformer, 480V/120V 150VA
12	807-1683		Relay, 12VDC
13	826-1358		Nut, 6-32 Keps Hex (Pkg. of 25)
14	826-1365		Screw, 6-32 X ⅜-inch Slot Head (Pkg. of 25)
15	809-0123		Screw, #10 X ¾-inch Slot Head
16	826-1376		Nut, 10-32 Keps Hex (Pkg. of 10)
17	809-0360		Screw, #8 X ⅜-inch Hex Washer Slot Head
18	826-1374		Screw, #10 X ½-inch Hex Head (Pkg. of 25)
*	200-5627		Lid, Left or Right Contactor Box
*	807-2240		Fuse, 60 AMP 300VAC (replaced 45 AMP)
*	807-0501		Fuseholder block

* Not illustrated. Use standard part.

8.4.3 Heating Element Assembly and Associated Parts

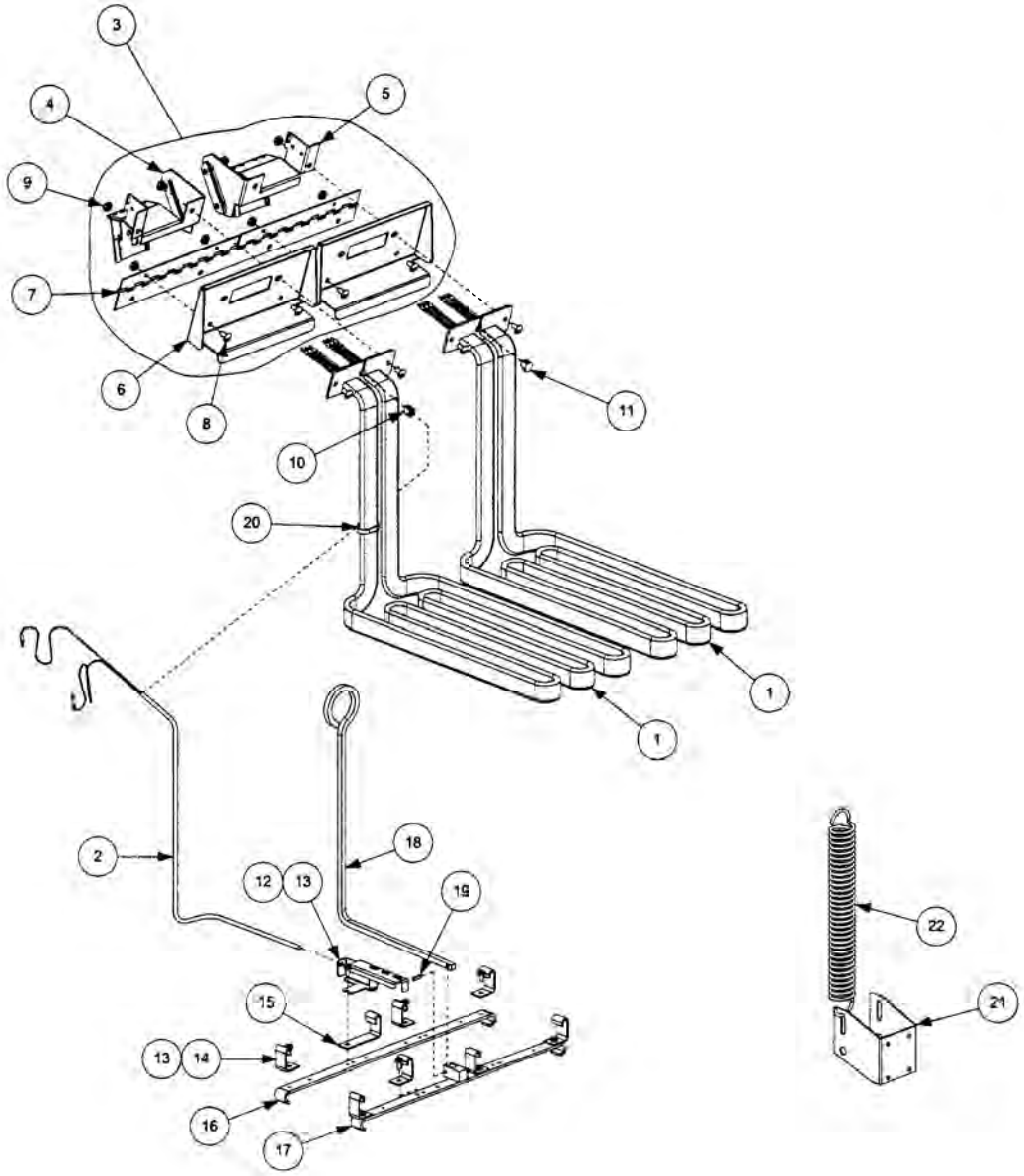

NOTES:
The only difference between element assemblies for different voltage and kW ratings is the element itself (Item 1)

Items 21 and 22 are shown as associated parts. They are not part of the element assembly.

8.4.3 Heating Element Assembly and Associated Parts (cont.)

ITEM	STANDARD PART #	EURO-LOOK PART #	COMPONENT
1			Element
	807-2649		440V 7.0 kW
	807-2650		440V 8.5 kW
	807-3176		440V 11.0 kW
	807-2651		480V 7.0 kW
	807-2652		480V 8.5 kW
	807-3177		480V 11.0 kW
2	826-1526		Probe, Temperature
3	106-0004SP		Tilt Plate Assembly
4	106-0572SP		Bracket, Left Spring Slot
5	106-0573SP		Bracket, Right Spring Slot
6	910-9641		Tilt Plate
7	810-0035		Hinge
8	826-1330		Screw, 10-32 X ⅜-inch Slotted Truss Head (Pkg. of 25)
9	826-1376		Nut, 10-32 Keps Hex (Pkg. of 10)
10	826-1339		Bushing, .375-inch Split (Pkg. of 10)
11	816-0480		Plug, .375-inch Dome
12	910-5022		Bracket, Temperature Probe
13	809-0518		Screw, 8-32 X ⅜-inch Slotted Hex Head
14	910-2042		Clamp, Element (Short)
15	910-5213		Clamp, Element (Long)
16	910-3681		Support, Full-Vat Element Rear
17	823-2377		Support, Full-Vat Element Front
18	810-1233		Handle, Element Lift
19	810-1212		Pin, .125 X .5-inch Split
20	809-0567		Tie-Wrap, Metal
21	200-2060		Bracket, Lower Spring Slot
22	810-0297		Spring, Element

Use standard part.

8.4.4 Controller

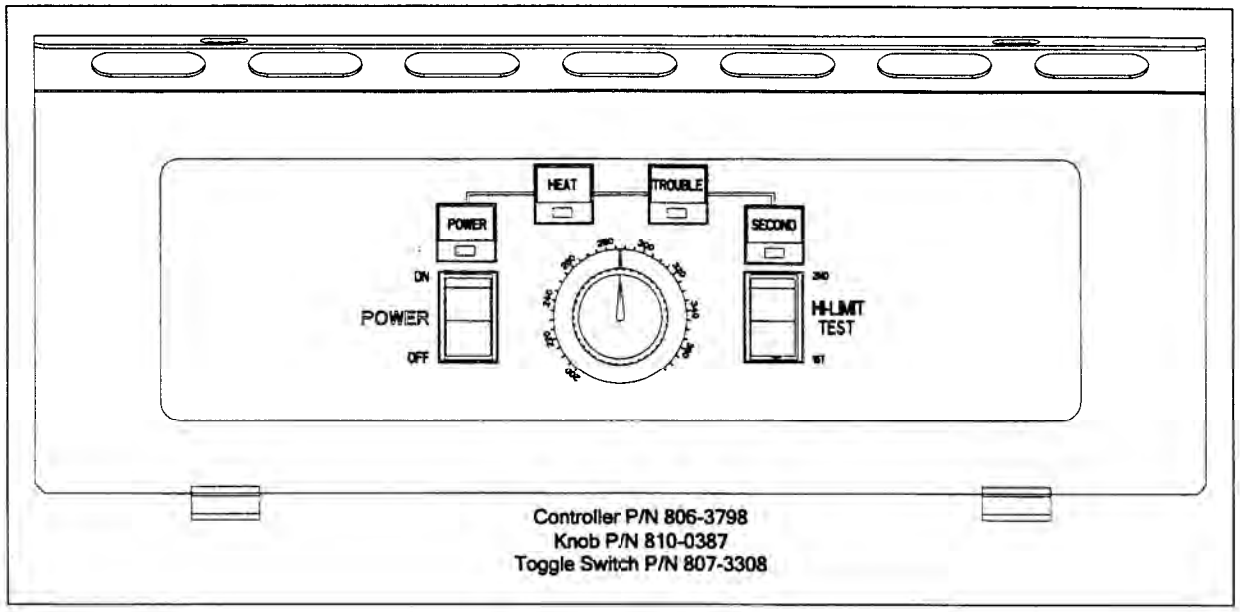

8.4.5 Wiring

8.4.5.1 Contactor Box Wiring Assembly – 12-Pin Full-Vat C-1

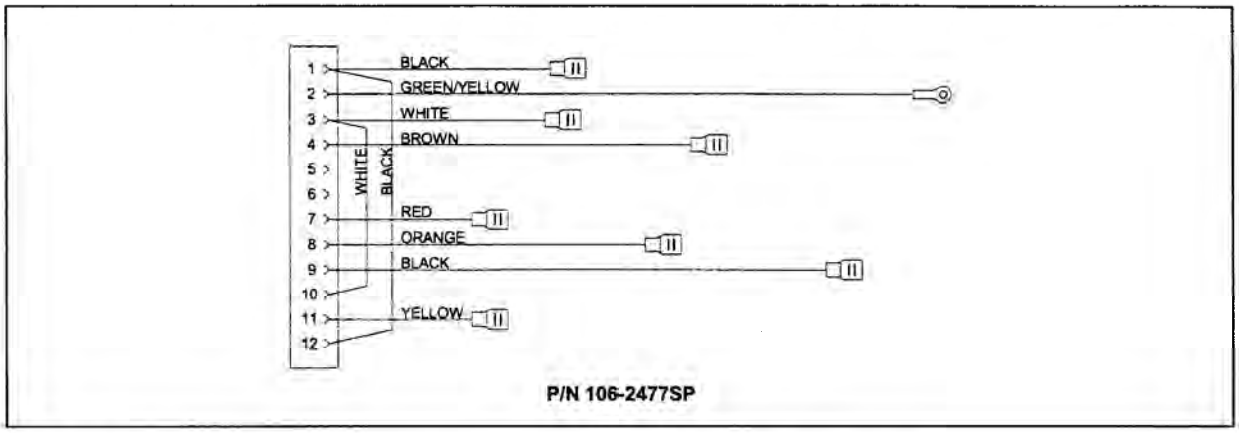

8.4.5.2 Contactor Box Wiring Assemblies – 6-Pin (Left Element)

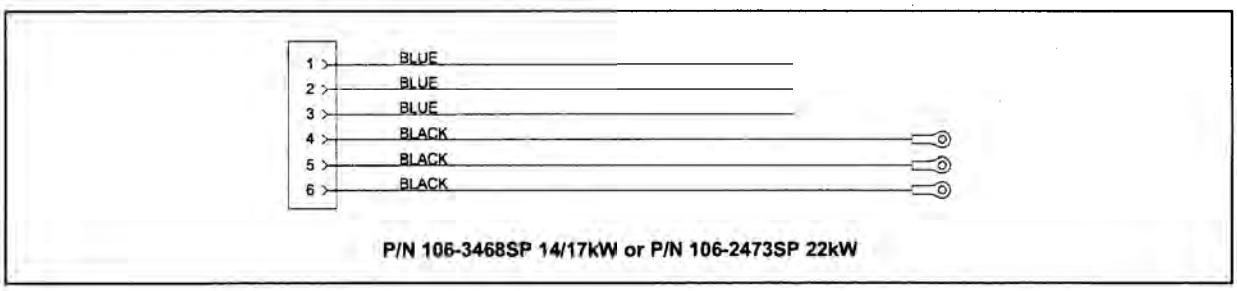

8.4.5.3 Contactor Box Wiring Assemblies – 9-Pin (Right Element)

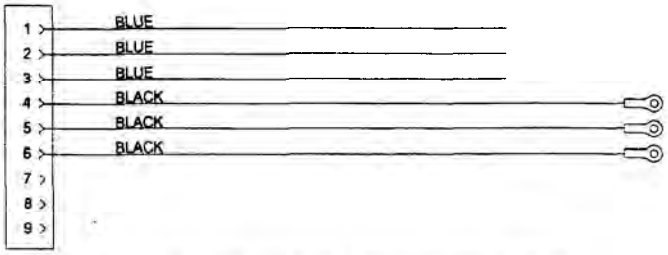

P/N 106-3467SP 14/17kW or P/N 106-2472SP 22kW

8.4.5.4 Single Contactor Box Wiring Assembly

P/N 106-0313SP 17kW

8.4.5.5 Main Wiring Harness

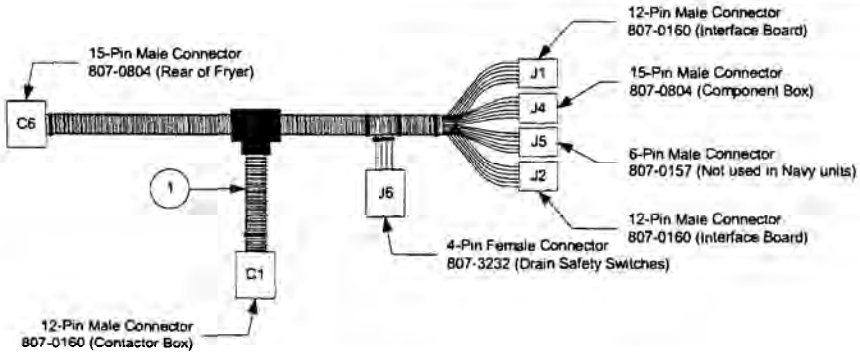

P/N 807-3769

8.4.5.6 Single Main Wiring Harness

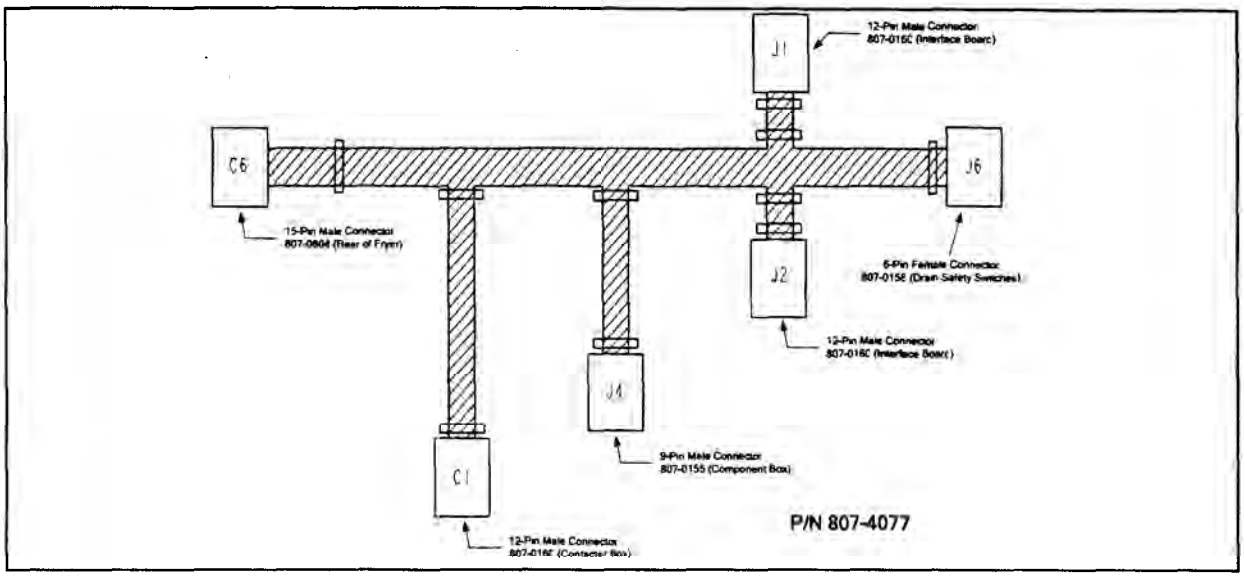

8.4.5.7 Component Box Wiring Harness – 15-Pin

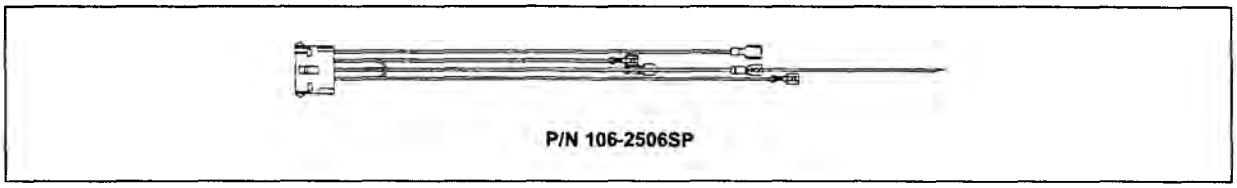

8.4.5.8 Single Component Box Wiring Harness – 15-Pin

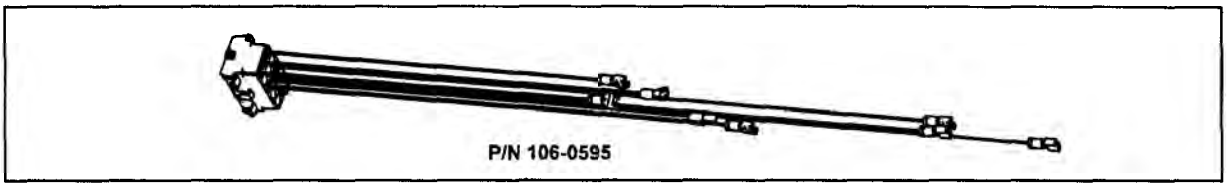

8.4.5.9 Single Component Box Wiring Harness – 15-Pin without Filter

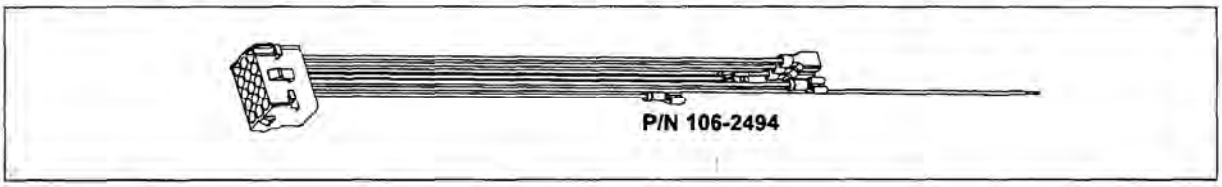

8.4.5.10 Interface Board to Controller Wiring Harness – 15-Pin

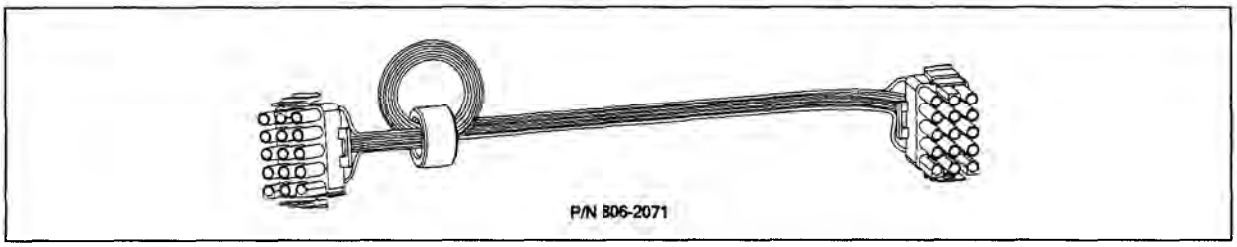

8.5 Filtration System Components

8.5.1 FPH117 Filtration Components

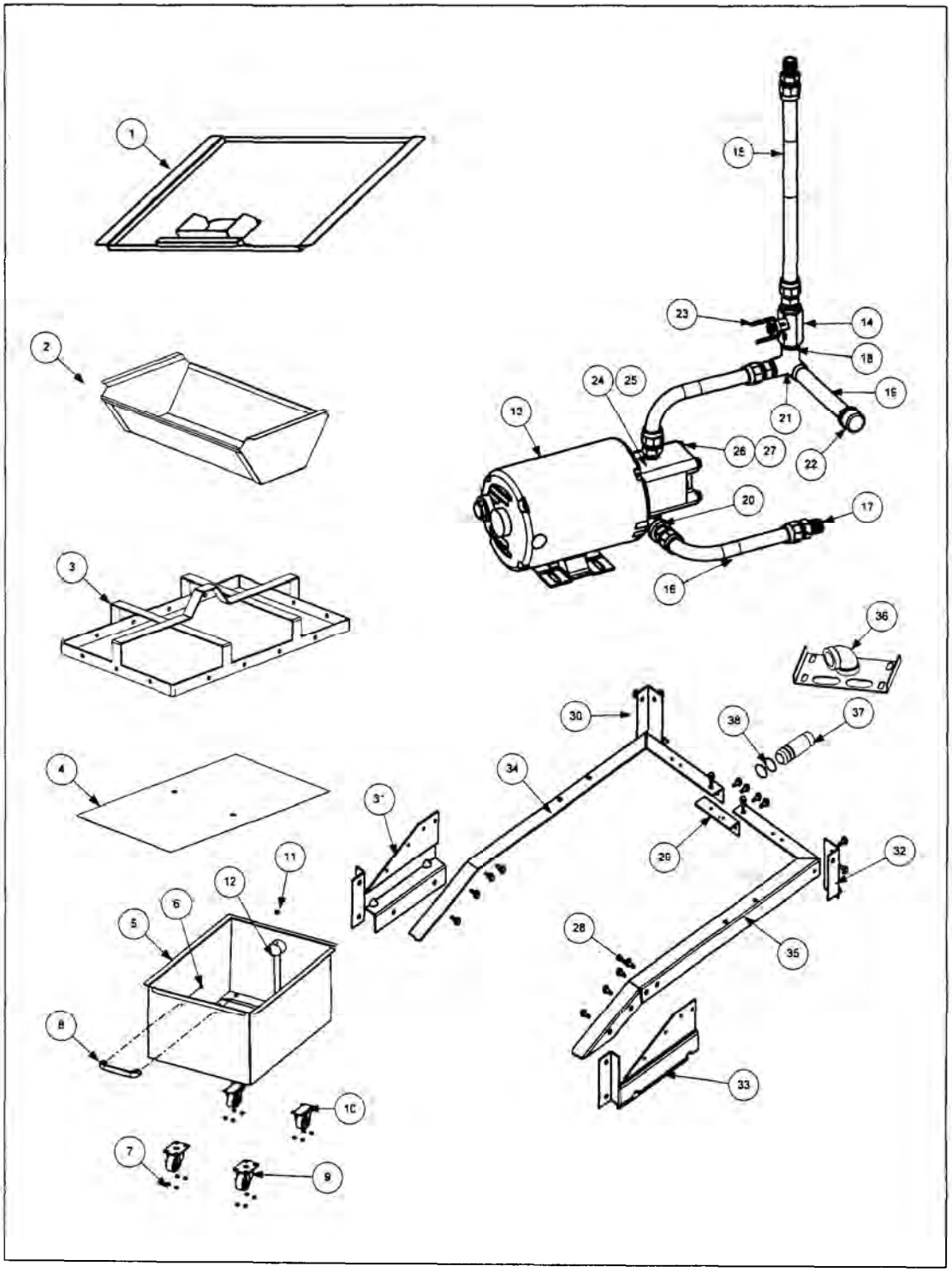

8.5.1 FPH117 Filtration Components (cont.)

ITEM	PART #	EURO-LOOK PART#	COMPONENT
	806-9546SP	106-4945	Assembly, Filter Pan FPH117
1	806-9547		Lid, Single FPH117
2	810-2743		Crumb Tray
3	823-2899		Hold Down Ring
4	900-8933		SanaGrid Filter Screen
5	823-2828	823-5141	Pan, Filter
6	826-1360		Screw, 10-24 x 5/16 RD SL HD ZP (Pkg. of 25)
7	826-1376		Nut, KEPS, 10 – 32 HX ZP (Pkg. of 10)
8	810-0180		Handle, Door
9	810-2805		Caster, 2" Filter Pan
10	810-2807		Caster, 2" Rigid
11	813-0568		Pipe Plug 1/8 NPT Socket Head
12	823-5142		Tube, Pan Suction Single FP
	106-4976		Plumbing Assembly, 120V FV Single FP
13	806-6034		Pump & Motor Assembly, 115V 60 HZ
14	810-2944		Gemini Valve without Handle
15	810-1057		Flex Line 5/8" O.D. x 13" Long
16	810-1067		Flex Line 5/8" O.D. x 8.5" Long
17	810-1668		Adapter, Male 7/8" O.D. x ½"
18	813-0022		Nipple, ½" x Close N.P.T. B.M.
19	813-0098		Nipple, ½" x 6.50" N.P.T. B.M. Pipe
20	813-0616		Elbow, ST ½" x ½" NPT 90° BM
21	813-0331		Elbow, W/Side Outlet – ½" NPT
22	813-0469		Cap, Pipe ½" BM
23	210-9197		Handle, Right RF Valve
24	826-1264		Pump and Gasket Kit, Pump, Viking 4 GPM 2-piece
25	816-0093		Gasket, Pump / Motor
26	809-0514		Cap Screw, 5/16" – 18 NC SAE Grade 5, HX HD
27	809-0194		Washer, Flat 5/16" SAE ZP
	106-4951		Rail Assembly, Filter Pan Single FPH117
28	809-0500		Screw, 10 – ½" HX HD SS
29	210-9145		Angle, Joining, Pan Rails Filter Magic
30	211-9147		Leg, Pan Rail FM Left
31	211-9146		Bracket, Attaching Filter Pan Left
32	212-9147		Leg, Pan Rail FM Right
33	212-9146		Bracket, Attaching Filter Pan Right
34	211-9455		Rail, Filter Pan Left
35	212-9455		Rail, Filter Pan Right
36	823-5151		Mount W/A, Male Connector
37	810-0697		Disconnect, Filter Pan Connection (Male)
38	826-1392		O-Ring, Filter Pan Connection (Pkg. of 5)

Use standard part.

8.5.2 Multiple Battery Filtration System Components

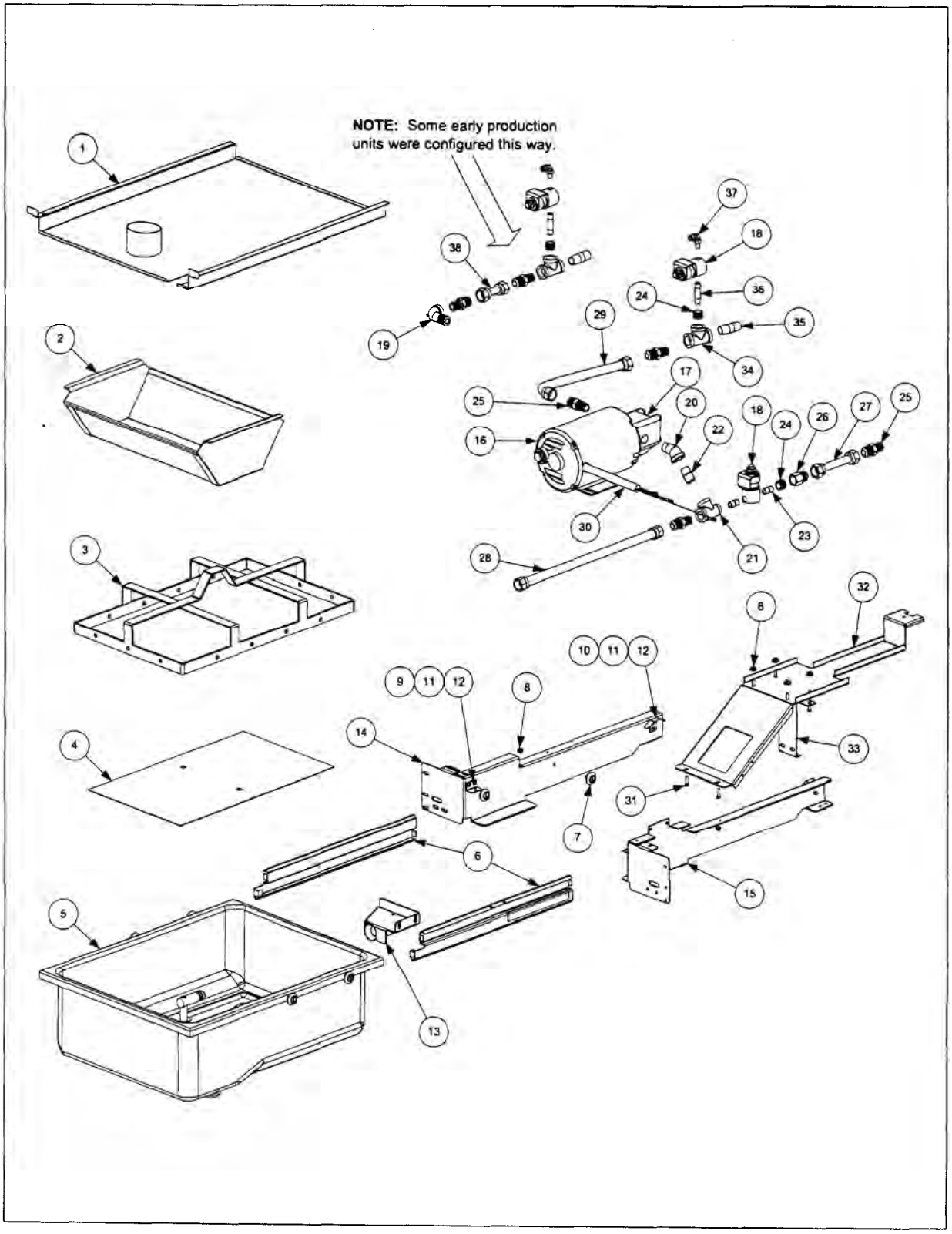

8.5.2 Multiple Battery Filtration System Components (cont.)

ITEM	STANDARD PART #	EURO-LOOK PART #	COMPONENT
*	826-1979		Filter Pan Roller Kit (four each of Items 7 and 8)
*	826-1980		Service Filter Pan (Item 5 minus Item 2)
*	826-1981		Service Filter Pan Assembly (Service Filter Pan above plus Items 3 & 4)
*	826-1392		O-Ring (Pkg. of 5; used with Item 5)
*	813-0568		Plug, ⅛-inch Socket Head Pipe (component of Item 5; two required)
*	811-1071		Tubing, ¼-inch OD Teflon Vent (sold by the foot)
*	106-2852SP		Heater Strip Assembly, 208-250V 18" 25W
1	823-4637	823-4787	Lid ***(for units built before Feb 04, use 823-4391)***
2	810-2743		Crumb Tray (component of Item 5)
3	810-2091		Hold Down Ring
4	200-2124		SanaGrid Filter Screen
5	106-2617SP		Pan, One-Piece Filter (includes Item 2 and o-rings)
6	810-2012		Rail Set, Filter Pan Roller (includes one left and one right)
7	810-2198		Roller, Filter Pan and Rail
8	826-1372		Nut, ¼-20 Hex (Pkg. of 10)
9	823-4589	823-4675	Bracket, Lid Support ***(for units built before Feb 04, use 823-3875)***
10	200-3556		Guide, Filter Pan Lid
11	809-0104	809-0503	Screw, 8-32 X ½-inch Slotted Truss Head
12	809-0247		Nut, 8-32 Hex Keps
13	823-3879		Suction Tube
14	200-4408		Rail, Left Filter
15	200-4409		Rail, Right Filter
16	826-1270	807-3861	Kit, Motor and Gasket 220-240V
17	826-1264		Pump and Gasket Kit
18	807-2484		Valve, ¼-inch Solenoid
19	813-0165		Elbow, ½-inch 90° Street
20	813-0342		Elbow, ½-inch 45° Street
21	813-0530		Tee, ½-inch X ¼-inch X ½-inch Reducing
22	813-0022		Nipple, ½-inch Close
23	813-0838		Nipple, ¼-inch Close
24	813-0304		Bushing, ½-inch to ¼-inch Flush
25	810-1668		Adapter, ⅝-inch to ½-inch NPT Male
26	810-1669		Adapter, ⅝-inch to ½-inch NPT Female
27	810-1159		Flexline, 5.0-inch Oil Return
28	810-1369		Flexline, 17.5-inch Oil Return
29	810-1055		Flexline, 11.5-inch Oil Return
30	807-3828		Cable, FootPrint Pro Pump Motor
31	826-1375		Screw, 10-32 X ¾-inch Hex Trim Head (Pkg. of 5)
32	200-5950		Bridge, Filter Motor
33	210-3149		Support, Contactor Box
34	813-0003		Tee, ½-Inch
35	813-0298		Nipple, ½-inch 2.0-inch
36	813-0537		Nipple, ¼-inch 2.0-inch
37	810-2493		Fitting, ¼-inch X 90° Quick-Connect
38	810-1160		Flexline, 3.0-inch Oil Return
*		810-1043	Flexline, 9.5-inch Oil Return
*		810-1057	Flexline, 13.0-inch Oil Return

* Not illustrated. Use standard part.

8.6 Frypot Assembly and Thermostat

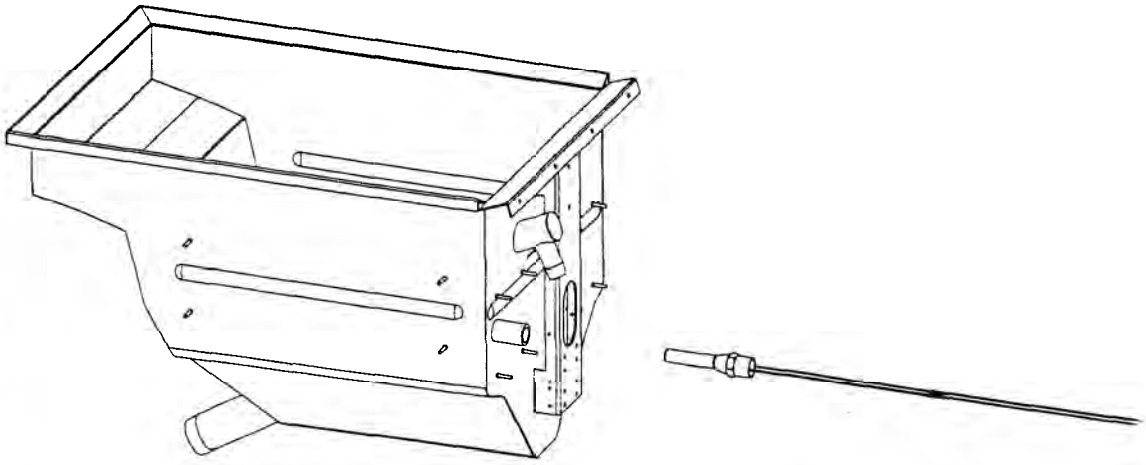

Frypot P/N 823-2451SP

Thermostat P/N 806-7543

8.7 Oil Return System Components

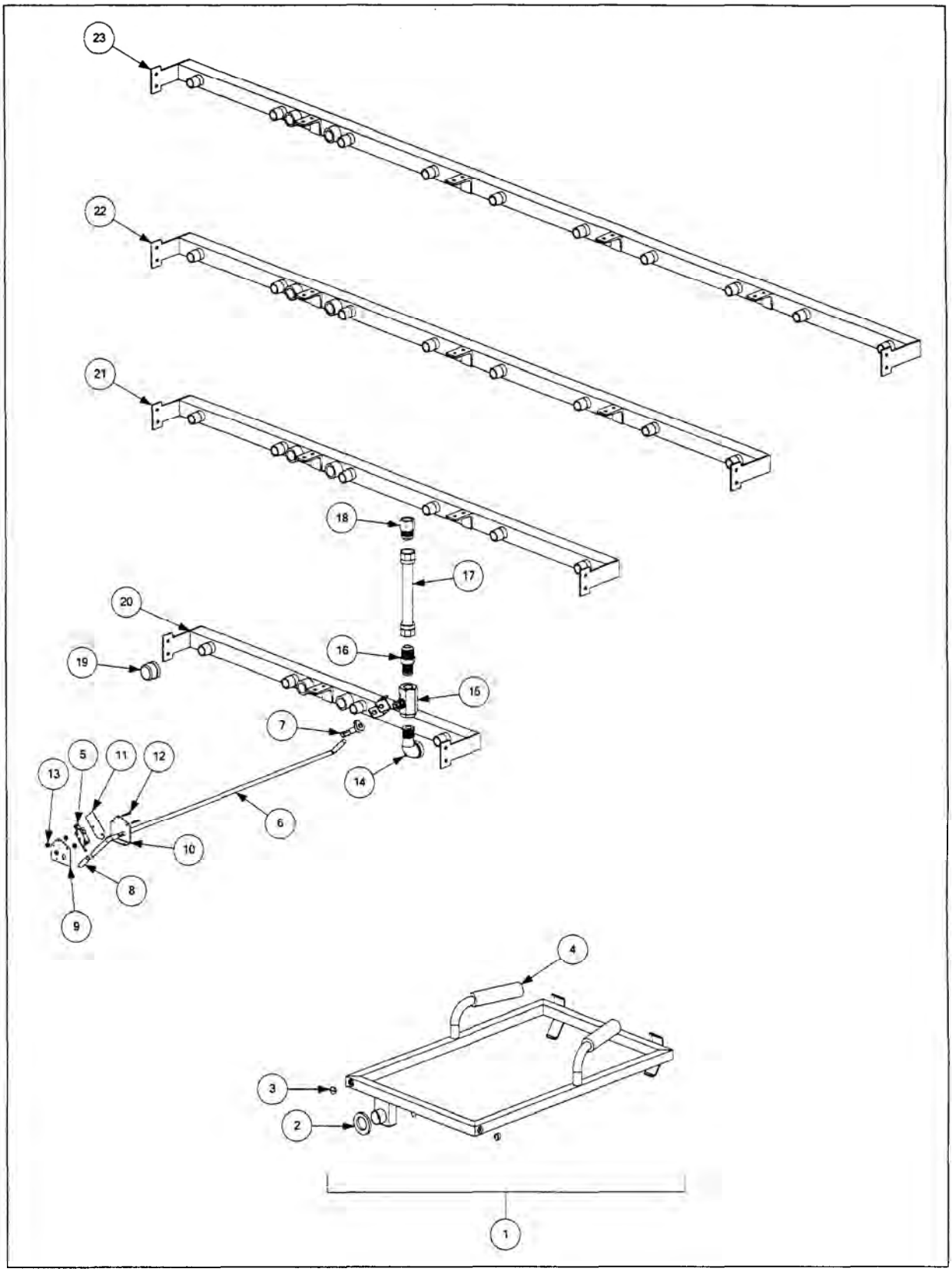

8.7 Oil Return System Components (cont.)

ITEM	STANDARD PART #	EURO-LOOK PART #	COMPONENT
1	806-4505SP		Power Shower Assembly, Full-Vat
2	826-0992		Seal, Power Shower (Pkg. of 3)
3	809-0415		Screw, Power Shower Cleanout
4	814-0001		Grip, Power Shower Handle
5	807-2103		Microswitch, Oil Return
6	810-2330		Handle, Oil Return Valve
7	809-0601		Clip, Clevis
8	810-0677		Grip, Oil Return Valve Handle
9	200-5401		Bracket, Handle Retainer
10	106-3349		Bracket, Oil Return Microswitch
11	816-0220		Insulation, Oil Return Microswitch
12	826-1359		Screw, 4-40 X ¾-inch Slotted Pan Head (Pkg. of 25)
13	826-1366		Nut, 4-40 Keps Hex (Pkg. of 25)
14	813-0165		Elbow, ½-inch X 90° Street
15	810-0278		Valve, ½-inch Ball
16	810-1668		Adapter, ⅝-inch to ½-inch NPT Male
17	810-1680		Flexline, 6.5-inch
18	810-1669		Adapter, ⅝-inch to ½-inch NPT Female
19	813-0469		Cap, ½-inch NPT Pipe
20	810-2255		Manifold, Two-Station Fryer
21	810-2256		Manifold, Three-Station Fryer
22	810-2257		Manifold, Four-Station Fryer
23	810-2312		Manifold, Five-Station Fryer

Use standard part.

8.8 WIRING CONNECTORS, PIN TERMINALS, AND POWER CORDS

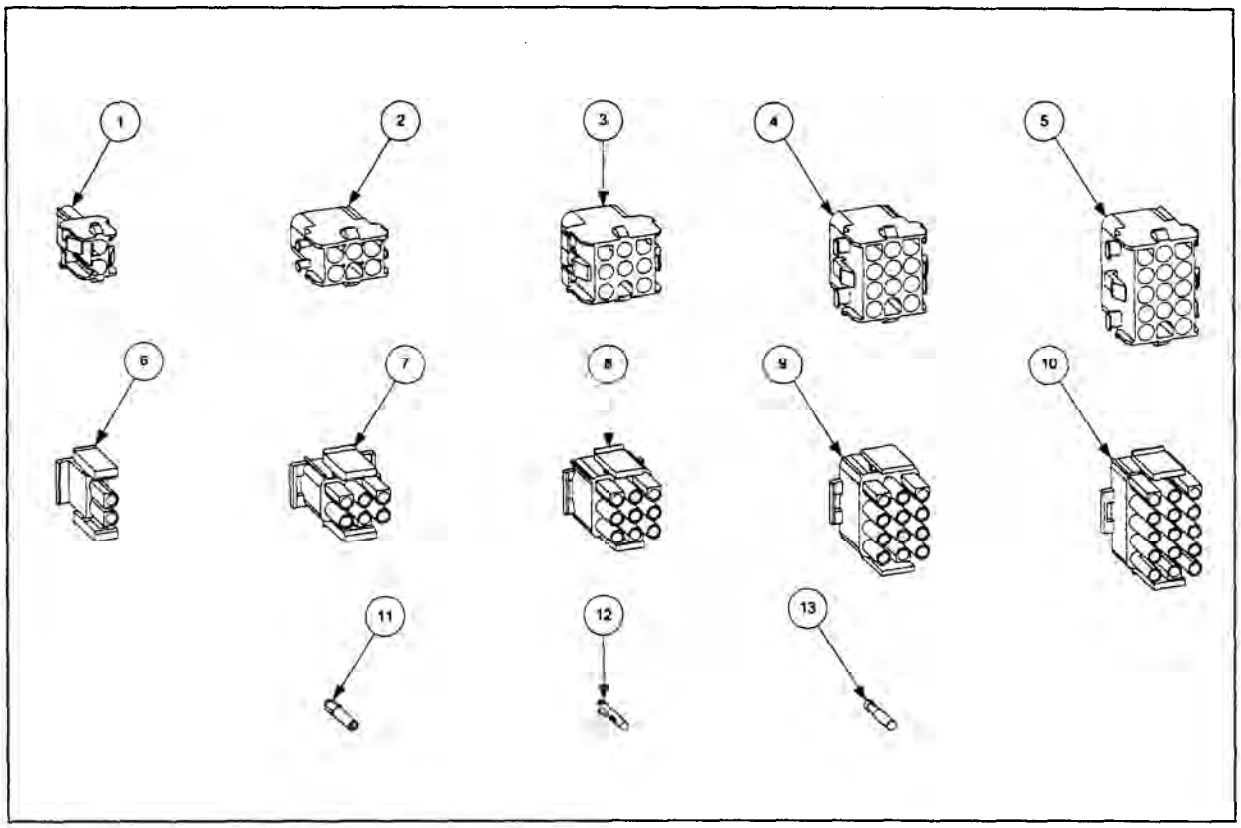

ITEM	STANDARD PART #	EURO-LOOK PART #	COMPONENT
			Power Cords
*	807-3834		Cable, 3-Phase 4-Wire (Fryer Power Cable)
*	807-3825		Cord, Filter System Power
			Connectors
1	807-1068		2-Pin Female
2	807-0158		6-Pin Female
3	807-0156		9-Pin Female
5	807-0159		12-Pin Female
5	807-0875		15-Pin Female
6	807-1067		2-Pin Male
7	807-0157		6-Pin Male
8	807-0155		9-Pin Male
9	807-0160		12-Pin Male
10	807-0804		15-Pin Male
11	826-1341		Terminal, Female Split Pin (Pkg of 25)
12	826-1342		Terminal, Male Split Pin (Pkg of 25)
13	807-2518		Plug, Mate-N-Lock (Dummy Pin)

* Not illustrated. Use standard part.

THIS PAGE INTENTIONALLY LEFT BLANK

Frymaster®

Enodis®
One Company, Countless Solutions

Frymaster, L.L.C., 8700 Line Avenue, PO Box 51000, Shreveport, Louisiana 71135-1000
Shipping Address: 8700 Line Avenue, Shreveport, Louisiana 71106

TEL 1-318-865-1711 FAX (Parts) 1-318-688-2200 (Tech Support) 1-318-219-7135

SERVICE HOTLINE
1-800-551-8633

PRINTED IN THE UNITED STATES

819-6004
AUGUST 2005

Part I

CONTROLLER DATA

ITEM_____

SHEET__1___OF__1___

Manufacturer_Frymaster_____

Master Drawing_____

Certification Data__UL_____

Rating (HP, Volts, Phase) ___12V ac 1/0_____

Size___12 7/8 x 4 3/8 x 1 1/4_____

Operation_____

Type_____Low voltage, solid state temperature controller_____

Fuction__Controls fryer temperature_____

Duty__Continous_____

Low Voltage Feature___Only low voltage offered._____

Overload Relay

Heater Catalog NO._____N/a_____

Type_____

Emergency Run (YES/NO)_____No_____

Ambient Degree C _____160F_____

Enclosure _____Sheet Metal_____

Weight __2.56 lbs_____

Equipment Specification ___Frymaster Gas or Electric Fryers_____

Location _____N/A_____

Quantity _____One per Frypot_____

SYMBOL NO._____

THE SOURCE

MOTOR CHARATERISTICS & PERFORMANCE DATA

ITEM___8073861 _Baldor #34M031Y231G1_____

SHEET__1___OF___1__(If Equipment Contains Multiple Motors, Give Data for Each Separately)

Manufacturer___Baldor_____

Master
Drawing___8073861D_____

Certification Data____UL 1004___UL547_____

Auxiliary _____

Equipment Model NO._____

Quantity ___1 per Filter Unit_____

Rating (HP, Volts, Phase)_1/3, ¼ hp, 230V, single phase, 1425/1725 rpm_____

Insulation_____Class H_____

Weight___21 lbs_____

Cycles_____60/50 hz_____

Design_____

Torque-Starting _____1.42 lb-ft_ 60hz_____1.65 lb-ft_____50hz_____

-Full Load_____1.01 lb-ft____60hz_____.0902 lb-ft____50hz_____

Ampers-Starting _____21.9 Amps___60hz_____21.4 Amps___50hz_____

-Full Load____2.5 Amps____60hz_____2.9 Amps____50hz_____

Power Factor

-F.L.__69____60hz_____54_____50hz_____

-3/4___61____"_____47_____"_____

-1/2___50_____"_____40_____"_____

-Locked_____

Enclosure_____OPEN_____

Service_____1.0 s.f._____

Duty_____Continuous_____

Type_____

Ambient Degree C_____40' C_____

Part I

F.L KW_____

Motor Frame_____

Equipment Specification_____

Efficiency_____

PART II

Model H14SC/H17SC/H22SC Single Fryers, FPH17SC Series Filtration System Fryers with Serial Numbers Beginning with 0604

NAVY SURFACE SHIP ELECTRIC FRYERS

Installation, Operation, Service, and Parts Manual

H14SC/H17SC/H22SC Single Fryers, FPH17SC Series Filtration System Fryers

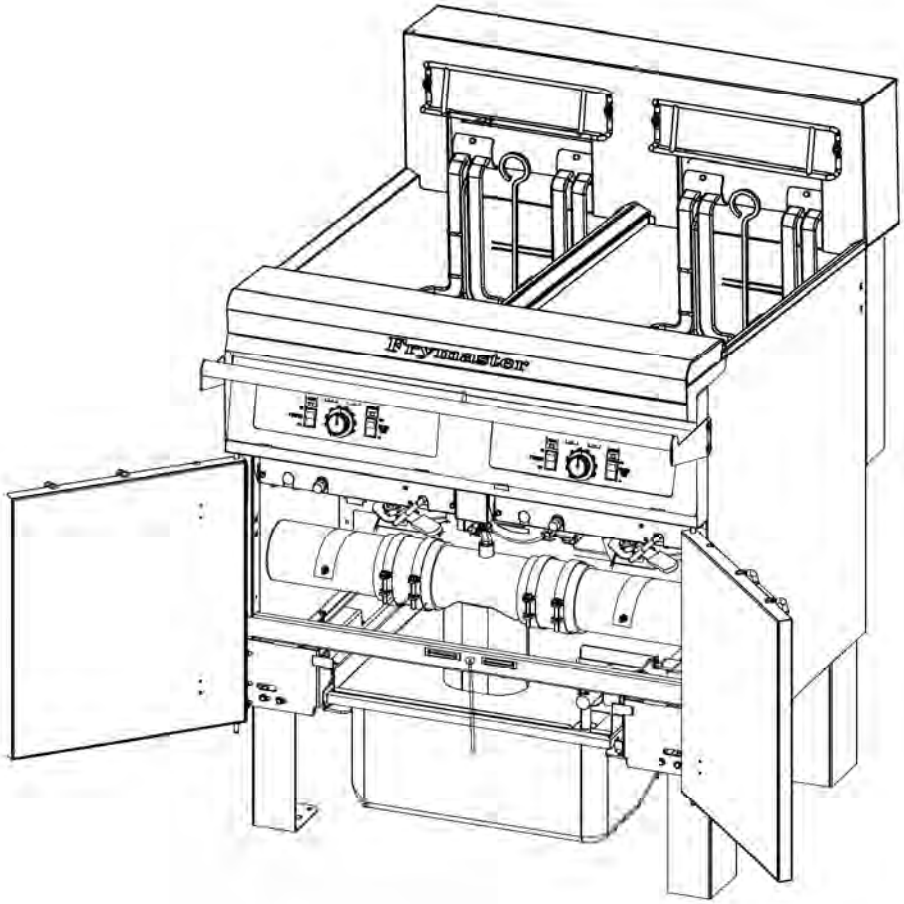

This manual is applicable to fryers manufactured beginning **May 2006** with serial numbers beginning with 0604. For serial numbers between 0308 to 0604 refer to manual 819-6004. For serial numbers prior to 0308, refer to manual 819-5184.

Frymaster

CFESA

Frymaster, a member of the Commercial Food Equipment Service Association, recommends using CFESA Certified Technicians.

24-Hour Service Hotline 1-800-551-8633

NOV 08

8196203

www.frymaster.com E-mail: service@frymaster.com

NOTICE

IF, DURING THE WARRANTY PERIOD, THE CUSTOMER USES A PART FOR THIS ENODIS EQUIPMENT OTHER THAN AN UNMODIFIED NEW OR RECYCLED PART PURCHASED DIRECTLY FROM FRYMASTER DEAN, OR ANY OF ITS AUTHORIZED SERVICE CENTERS, AND/OR THE PART BEING USED IS MODIFIED FROM ITS ORIGINAL CONFIGURATION, THIS WARRANTY WILL BE VOID. FURTHER, FRYMASTER DEAN AND ITS AFFILIATES WILL NOT BE LIABLE FOR ANY CLAIMS, DAMAGES OR EXPENSES INCURRED BY THE CUSTOMER WHICH ARISE DIRECTLY OR INDIRECTLY, IN WHOLE OR IN PART, DUE TO THE INSTALLATION OF ANY MODIFIED PART AND/OR PART RECEIVED FROM AN UNAUTHORIZED SERVICE CENTER.

⚠ DANGER

Copper wire suitable for at least 167°F (75°C) must be used for power connections.

⚠ DANGER

The electrical power supply for this appliance must be the same as indicated on the rating and serial number plate located on the inside of the fryer door.

⚠ DANGER

This appliance must be connected to the voltage and phase as specified on the rating and serial number plate located on the inside of the fryer door.

⚠ DANGER

All wiring connections for this appliance must be made in accordance with the wiring diagrams furnished with the equipment. Wiring diagrams are located on the inside of the fryer door.

⚠ DANGER

Do not store or use gasoline or other flammable vapors and liquids in the vicinity of this or any other appliance.

NOTICE

Drawings and photos used in this manual are intended to illustrate operational, cleaning and technical procedures. They may differ slightly in appearance or placement between fryers but functionality should remain the same. They may not conform to onsite management operational procedures.

⚠ WARNING

Frymaster fryers equipped with legs are for permanent installations. Fryers fitted with legs must be lifted during movement to avoid damage and possible bodily injury. For a moveable or portable installation, Frymaster optional equipment casters must be used.
Questions? Call 1-800-551-8633 or email at service@frymaster.com

⚠ DANGER

The front ledge of the fryer is not a step. Do not stand on the fryer. Serious injury can result from slips or contact with the hot oil.

⚠ DANGER

All wiring connections for this appliance must be made in accordance with the wiring diagrams furnished with the equipment. Wiring diagrams are located on the inside of the fryer door.

⚠ WARNING

This equipment is intended for indoor use only. Do not install or operate this equipment in outdoor areas.

NOTICE

This appliance is intended for professional use only and is to be operated by qualified personnel only. A Frymaster DEAN Factory Authorized Service Center (FASC) or other qualified professional should perform installation, maintenance, and repairs. Installation, maintenance, or repairs by unqualified personnel may void the manufacturer's warranty.

NOTICE

This equipment must be installed in accordance with the appropriate national and local codes of the country and/or region in which the appliance is installed.

NOTICE TO U.S. CUSTOMERS

This equipment is to be installed in compliance with the basic plumbing code of the Building Officials and Code Administrators International, Inc. (BOCA) and the Food Service Sanitation Manual of the U.S. Food and Drug Administration.

⚠ WARNING

No structural material on the fryer should be altered or removed to accommodate placement of the fryer under a hood. Questions? Call the Frymaster Dean Service Hotline at 1-800-551-8633.

NOTICE TO OWNERS OF UNITS EQUIPPED WITH COMPUTERS

U.S.

This device complies with Part 15 of the FCC rules. Operation is subject to the following two conditions: 1) This device may not cause harmful interference, and 2) This device must accept any interference received, including interference that may cause undesired operation. While this device is a verified Class A device, it has been shown to meet the Class B limits.

CANADA

This digital apparatus does not exceed the Class A or B limits for radio noise emissions as set out by the ICES-003 standard of the Canadian Department of Communications.

Cet appareil numerique n'emet pas de bruits radioelectriques depassany les limites de classe A et B prescrites dans la norme NMB-003 edictee par le Ministre des Communcations du Canada.

⚠ DANGER

Improper installation, adjustment, maintenance or service, and unauthorized alterations or modifications can cause property damage, injury, or death. Read the installation, operating, and service instructions thoroughly before installing or servicing this equipment.

⚠ DANGER

The crumb tray in fryers equipped with a filter system must be emptied into a fireproof container at the end of frying operations each day. Some food particles can spontaneously combust if left soaking in certain shortening material.

⚠ WARNING

Do not bang fry baskets or other utensils on the fryer's joiner strip. The strip is present to seal the joint between the frypots. Banging fry baskets on the strip to dislodge shortening will distort the strip, adversely affecting its fit. It is designed for a tight fit and should only be removed for cleaning.

⚠ WARNING

Never spray the fryer with water or use water jets to clean the fryer.

Navy Surface Ship Electric Fryers
Installation, Operation, Service, and Parts Manual

TABLE OF CONTENTS

	Page
Chapter 1: Introduction	1-1
Chapter 2: Installation Instructions	2-1
Chapter 3: Operating Instructions	3-1
Chapter 4: Filtration Instructions	4-1
Chapter 5: Preventive Maintenance	5-1
Chapter 6: Operator Troubleshooting	6-1
Chapter 7: Service Procedures	7-1
Chapter 8: Parts List	8-1

NAVY SURFACE SHIP ELECTRIC FRYERS
CHAPTER 1: INTRODUCTION

1.1 General

Read the instructions in this manual thoroughly before attempting to operate this equipment. This manual covers all configurations of Navy Surface Ship Electric Fryer models specifically configured for use aboard surface ships of the U.S. Navy, including H14SC/H17SC/H22SC kW and FPH17SC kW filtration system models. The fryers in this model family have most parts in common, and when discussed as a group, will be referred to as "Navy Surface Ship Electric" fryers.

Although similar in appearance to the Footprint Pro family of Navy Electric fryers, the Navy Surface Ship Electric fryers feature a significantly different rotating element assembly. Other features, including the deep cold-zones, open frypots and filtration systems remain essentially unchanged. All Navy fryers are equipped with solid-state analog controllers. Fryers in this series can be single units or grouped in batteries of two or more fryers.

1.2 Safety Information

Before attempting to operate your unit, read the instructions in this manual thoroughly.

Throughout this manual, you will find notations enclosed in double-bordered boxes similar to the one below.

⚠ DANGER
Hot cooking oil causes severe burns. Never attempt to move a fryer containing hot cooking oil or to transfer hot cooking oil from one container to another.

⚠ **CAUTION** boxes contain information about actions or conditions that ***may cause or result in a malfunction of your system.***

⚠ **WARNING** boxes contain information about actions or conditions that ***may cause or result in damage to your system***, and which may cause your system to malfunction.

⚠ **DANGER** boxes contain information about actions or conditions that ***may cause or result in injury to personnel***, and which may cause damage to your system and/or cause your system to malfunction.

Fryers in this series are equipped with the following automatic safety features:

1. Two high-temperature detection features shut off power to the elements should the temperature controls fail.

2. A safety switch built into the drain valve prevents the elements from heating with the drain valve even partially open.

1.3 Controller Information

This equipment has been tested and found to comply with the limits for a Class A digital device, pursuant to Part 15 of the FCC rules. While this device is a verified Class A device, it has been shown to meet the Class B limits. These limits are designed to provide reasonable protection against harmful interference when the equipment is operated in a commercial environment. This equipment generates, uses and can radiate radio frequency energy and, if not installed and used in accordance with the instruction manual, may cause harmful interference to radio communications.

The user may find the following booklet prepared by the Federal Communications Commission helpful: "How to Identify and Resolve Radio-TV Interference Problems". This booklet is available from the U.S. Government Printing Office, Washington, DC 20402, Stock No. 004-000-00345-4.

1.4 Shipping Damage Claim Procedure

What to do if this equipment arrives damaged:

Please note that this equipment was carefully inspected and packed by skilled personnel before leaving the factory. The freight company assumes full responsibility for safe delivery upon acceptance of the equipment.

1. File Claim for Damages Immediately—Regardless of extent of damage.

2. Visible Loss or Damage—Be sure this is noted on the freight bill or express receipt and is signed by the person making the delivery.

3. Concealed Loss or Damage—If damage is unnoticed until equipment is unpacked, notify the freight company or carrier immediately and file a concealed damage claim. This should be done within 15 days of date of delivery. Be sure to retain container for inspection.

1.5 Service Information

For non-routine maintenance or repairs, or for service information, contact your local Frymaster Authorized Service Center (FASC). Service information may also be obtained by calling the Frymaster Technical Services Department (1-800-551-8633) or via e-mail at service @frymaster.com. The following information will be needed in order to assist you efficiently:

Model Number: _____
Serial Number: _____
Voltage: _____

Also be prepared to describe the specific problem.

RETAIN AND STORE THIS MANUAL IN A SAFE PLACE FOR FUTURE USE.

NAVY SURFACE SHIP ELECTRIC FRYERS
CHAPTER 2: INSTALLATION INSTRUCTIONS

2.1 Introduction

The instructions in this chapter cover all configurations of Navy Surface Ship Electric Fryer models specifically configured for use aboard surface ships of the U.S. Navy, including H14SC/H17SC/H22SC kW and FPH17SC kW filtration system models. The instructions do not cover and may not be used for installations aboard submarines or ashore.

Proper installation is essential for the safe, efficient, trouble-free operation of this appliance. Any unauthorized alteration of this equipment will void the Frymaster warranty.

NOTICE

All fryers shipped without factory supplied cords and plug assemblies must be hardwired using flexible conduit to the terminal block located on the rear of the fryer. These fryers should be wired to NEC specifications. Hardwired units must include installation of restraint devices.

⚠ DANGER

Adequate means must be provided to limit the movement of this appliance without depending on or transmitting stress to the electrical conduit

NOTICE

If this equipment is wired directly into the electrical power supply, a means for disconnection from the supply having a contact separation of at least 3-mm in all poles must be incorporated in the fixed wiring.

NOTICE

This equipment must be positioned so that the plug is accessible unless other means for disconnection from the power supply (e.g., a circuit breaker) is provided.

NOTICE

If this appliance is permanently connected to fixed wiring, it must be connected by means of copper wires having a temperature rating of not less than 167°F (75°C).

NOTICE

If the electrical power supply cord is damaged, it must be replaced by a Frymaster Dean Factory Authorized Service Center technician or a similarly qualified person in order to avoid a hazard.

⚠ DANGER

This appliance must be connected to a power supply having the same voltage and phase as specified on the rating plate located on the inside of the appliance door.

⚠ DANGER

All wiring connections for this appliance must be made in accordance with the wiring diagram(s) furnished with the appliance. Refer to the wiring diagram(s) affixed to the inside of the appliance door when installing or servicing this equipment.

⚠ DANGER

The appliance area must be kept free and clear of combustible material at all times.

⚠ WARNING

Do not block the area around the base or under the fryers.

All installation and service on FRYMASTER equipment must be performed by qualified, certified, licensed, and/or authorized installation or service personnel.

Service may be obtained by contacting a local Frymaster DEAN Factory Authorized Service Center.

In the event of a power failure, the fryer(s) will automatically shut down. If this occurs, turn the power switch OFF. Do not attempt to start the fryer(s) until power is restored.

A clearance of 6 inches (15cm) must be provided at both sides and back adjacent to combustible construction. A minimum of 24 inches (61cm) should be provided at the front of the equipment for servicing and proper operation.

Connections should be made by means of an approved, flexible-metallic or rubber-covered electrical cable and quick-disconnect plug. The fryers may be installed with "hard-wired" connections, but use of quick-disconnect plugs will facilitate service if required. Connections are made to the fryer power input terminal block located in lower back of the fryer(s).

⚠ DANGER

Observe the following precautions when connecting the fryer to an emergency cutoff system:

- **Be sure that each fryer is connected to a dedicated set of contacts in the emergency cutoff system.**
- **Do not connect the contacts in series.**
- **Do not connect more than one fryer to each set of contacts.**
- **The contacts MUST be normally closed contacts that open in an emergency.**
- **The contacts CANNOT have an external voltage applied.**

2.2 Power Requirements

MODEL	VOLTAGE	PHASE	WIRE SERVICE	MIN. SIZE	AWG (mm^2)	AMPS PER LEG		
						L1	L2	L3
H14SC	440	3	3	8	(10)	19	19	19
H14SC	480	3	3	8	(10)	17	17	17
H17SC/FPH17SC	440	3	3	6	(16)	23	23	23
H17SC/FPH17SC	480	3	3	6	(16)	21	21	21
H22SC	440	3	3	6	(16)	29	29	29
H22SC	480	3	3	6	(16)	27	27	27

The FPH17SC Navy Surface Ship electric fryers are equipped with a filter system that requires a separate 120VAC, single-phase, 3-wire, 20 amp service (refer to wiring diagrams in sections 7.12 and 7.13).

NOTICE

If this appliance is permanently connected to fixed wiring, it must be connected by means of copper wires having a temperature rating of not less than 167°F (75°C).

⚠ DANGER

This appliance must be connected to a power supply having the same voltage and phase as specified on the rating plate located on the inside of the appliance door.

⚠ DANGER

All wiring connections for this appliance must be made in accordance with the wiring diagram(s) furnished with the appliance. Refer to the wiring diagram(s) affixed to the inside of the appliance door when installing or servicing this equipment.

2.3 Installation

1. This equipment must be securely bolted to the deck.
2. Install deck studs for the specific fryer configuration in accordance with the diagrams at the end of this chapter.
3. Position the fryer on the deck studs and secure with appropriate nuts and lock washers.

⚠ DANGER

No structural material on the fryer should be altered or removed to accommodate placement of the fryer under a hood. Questions? Call the Frymaster Dean Service Hotline at 1-800-551-8633.

2.4 After Fryers Are Anchored At the Frying Station

⚠ DANGER

Hot oil can cause severe burns. Avoid contact. Under all circumstances, oil must be removed from the fryer before attempting to move it to avoid oil spills, falls and severe burns. This fryer may tip and cause personal injury if not secured in a stationary position.

1. Close frypot drain-valve(s) and fill frypot(s) with water to the bottom oil level line.
2. Boil out frypot(s) in accordance with the instructions in Section 5.1.3 of this manual.
3. Drain, clean, and fill frypot(s) with cooking oil. (See ***Equipment Setup and Shutdown Procedures*** in Chapter 3.)

2.5 Dimensions and Weights

Single Fryer (with Filter): LWH (inches) 33.80 X 15.58 X 45.5 - 295 lbs. empty.

Single Fryer: LWH (inches) 33.38 X 15.67 X 45.5 – 190 lbs. empty.

2-Fryer Battery: LWH (inches) 33.39 X 31.45 X 45.5 – 490 lbs. empty.

3-Fryer Battery: LWH (inches) 33.24 X 47.10 X 45.5 – 570 lbs. empty.

4-Fryer Battery: LWH (inches) 33.45 X 62.55 X 45.5 – 780 lbs. empty.

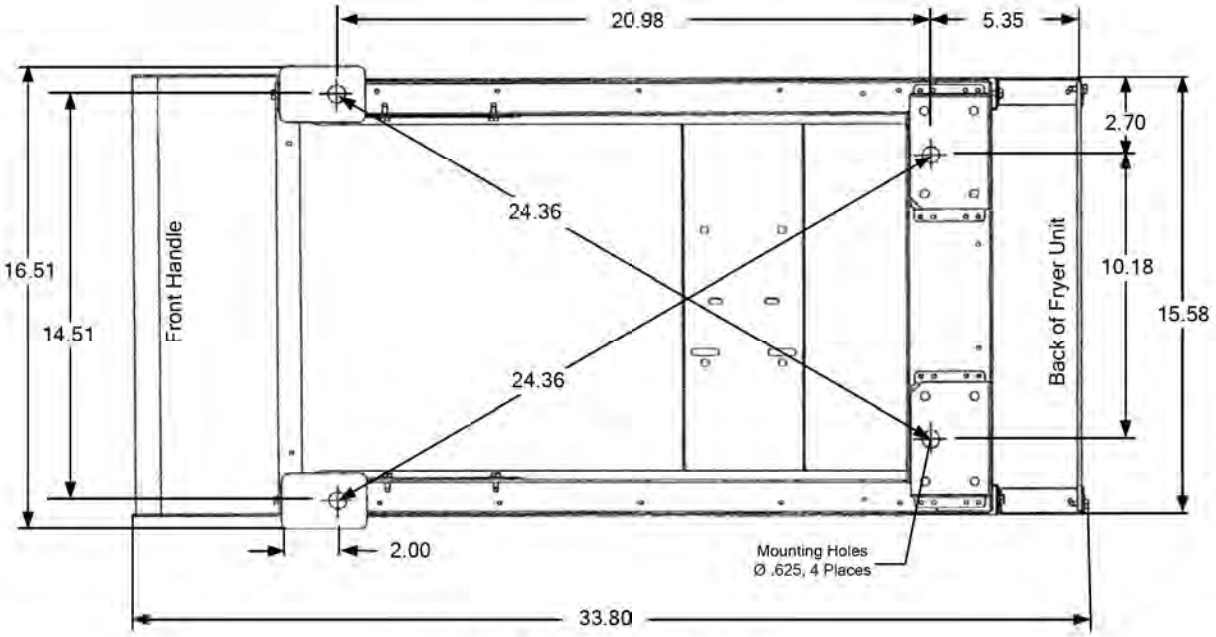

Single Fryer (with Filter)

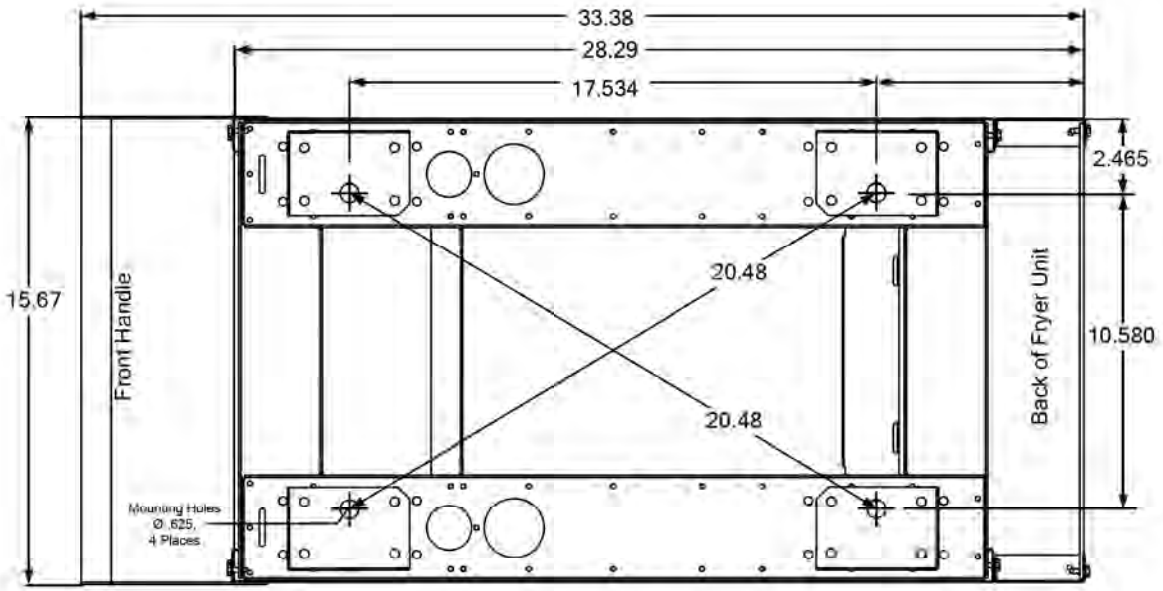

Single Fryer (non-filter)

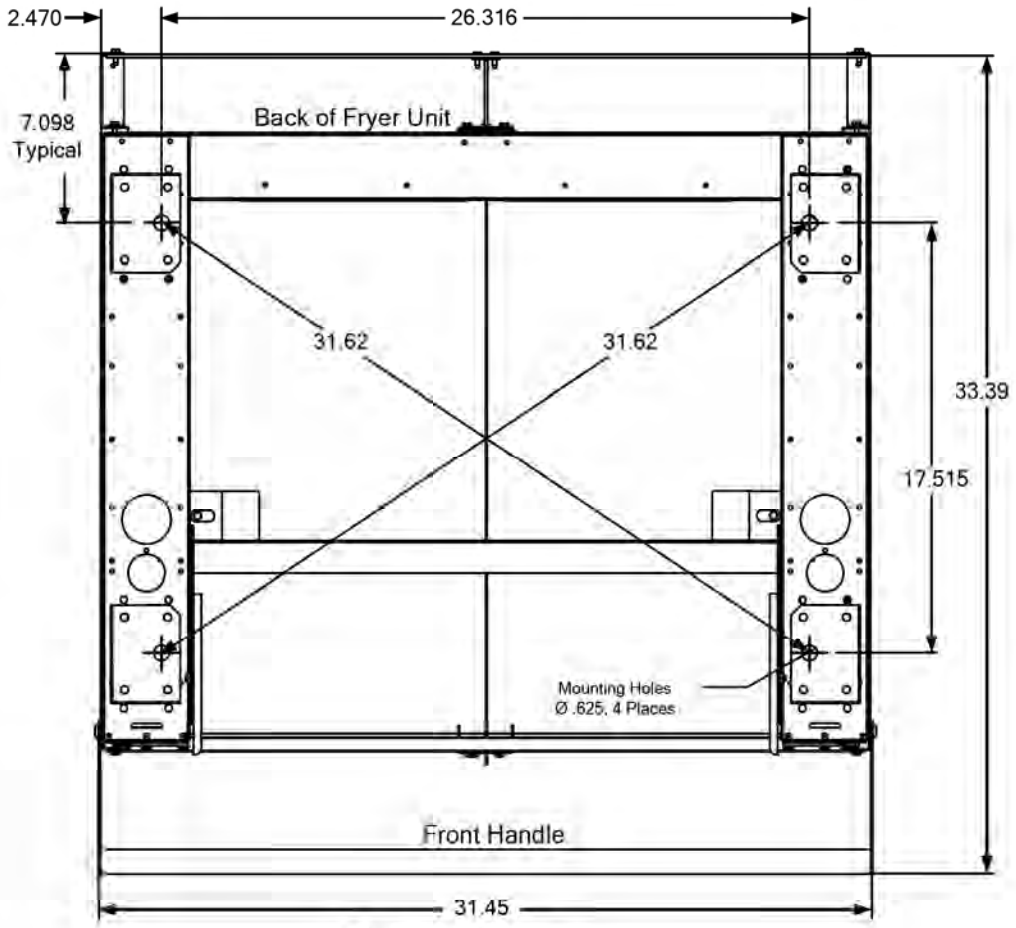

2-Fryer Battery

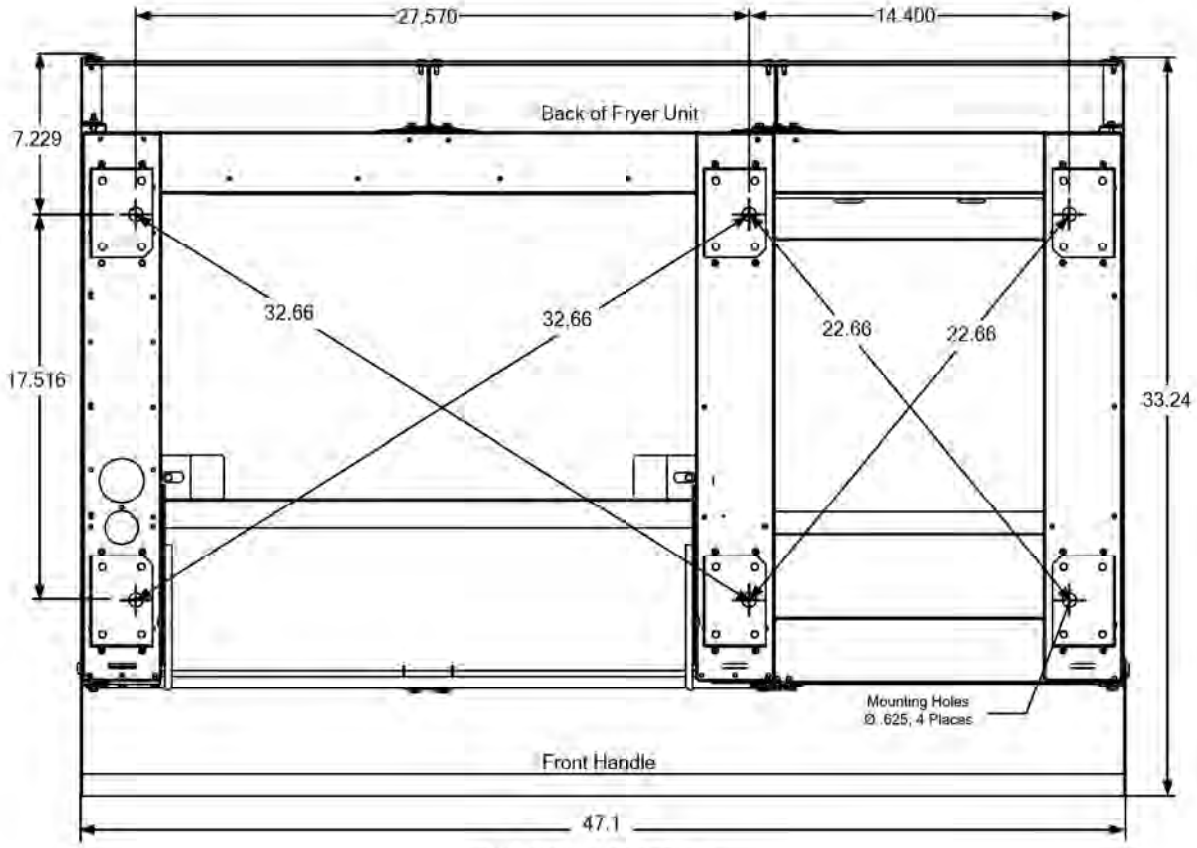

3-Fryer Battery

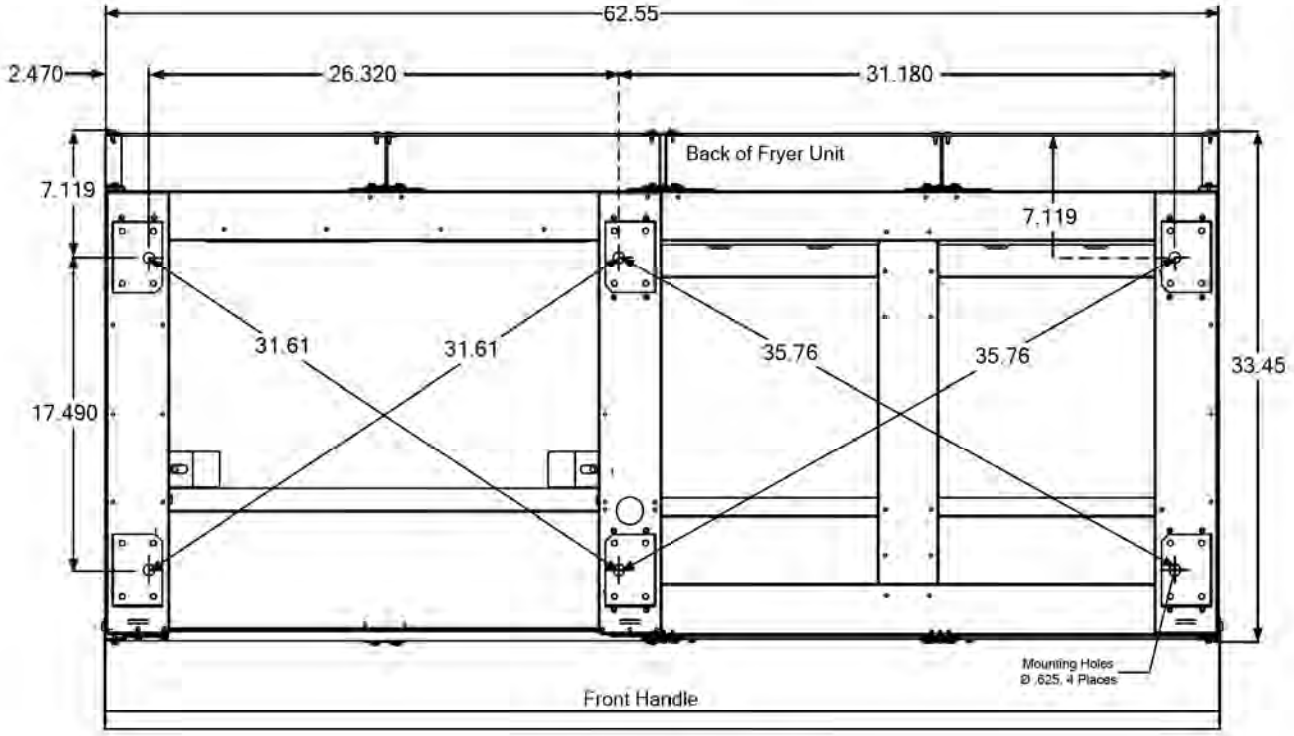

4-Fryer Battery

NAVY SURFACE SHIP ELECTRIC FRYERS
CHAPTER 3: OPERATING INSTRUCTIONS

3.1 Equipment Setup and Shutdown Procedures

Setup

> **⚠ DANGER**
> **Never operate the appliance with an empty frypot. The frypot must be filled with water or cooking oil before energizing the elements. Failure to do so will result in irreparable damage to the elements and may cause a fire.**

> **⚠ DANGER**
> **Remove all drops of water from the frypot before filling with cooking oil. Failure to do so will cause spattering of hot liquid when the oil is heated to cooking temperature.**

1. Fill the frypot with cooking oil to the bottom OIL LEVEL line located on the rear of the frypot. This will allow for oil expansion as heat is applied. Do not fill cold oil any higher than the bottom line; overflow may occur as heat expands the oil.

   NOTE: If solid shortening is used, first raise the elements, then pack the shortening into the bottom of the frypot. Lower the elements, and then pack the shortening around and over the elements. It may be necessary to add shortening to bring the level up to the proper mark after the packed shortening has melted.

> **⚠ DANGER**
> **Never set a complete block of solid shortening on top of the heating elements.**
>
> **When using solid shortening, always pre-melt the shortening before adding it to the frypot. If the shortening is not pre-melted, it must be packed down into the bottom of the frypot and between the elements, and the fryer must be started in the melt-cycle mode.**
>
> **Never cancel the melt-cycle mode when using solid shortening. Doing so will result in damage to the elements and increase the potential for a flash fire.**

2. If the fryer(s) is/are not hard-wired into the power supply, ensure that the power cord(s) is/are plugged into the appropriate receptacle(s). Verify that the face of the plug(s) is/are flush with the outlet plate, with no portion of the prongs visible.

3. Ensure that the oil level is at the *top* OIL LEVEL line when the oil *is at its cooking temperature*. It may be necessary to add oil to bring the level up to the proper mark, *after it has reached cooking temperature*.

Shutdown

1. Turn the fryer off.

2. Filter the cooking oil and clean the fryers (See Chapters 4 and 5).

3. Place the frypot covers on the frypots.

3.2 Operation of the Solid-State Analog Controller

NOTE: Refer to Chapter 4 of this manual for operating instructions for the built-in filtration system.

Fryers configured for the U.S. Navy are equipped with solid-state analog controllers.

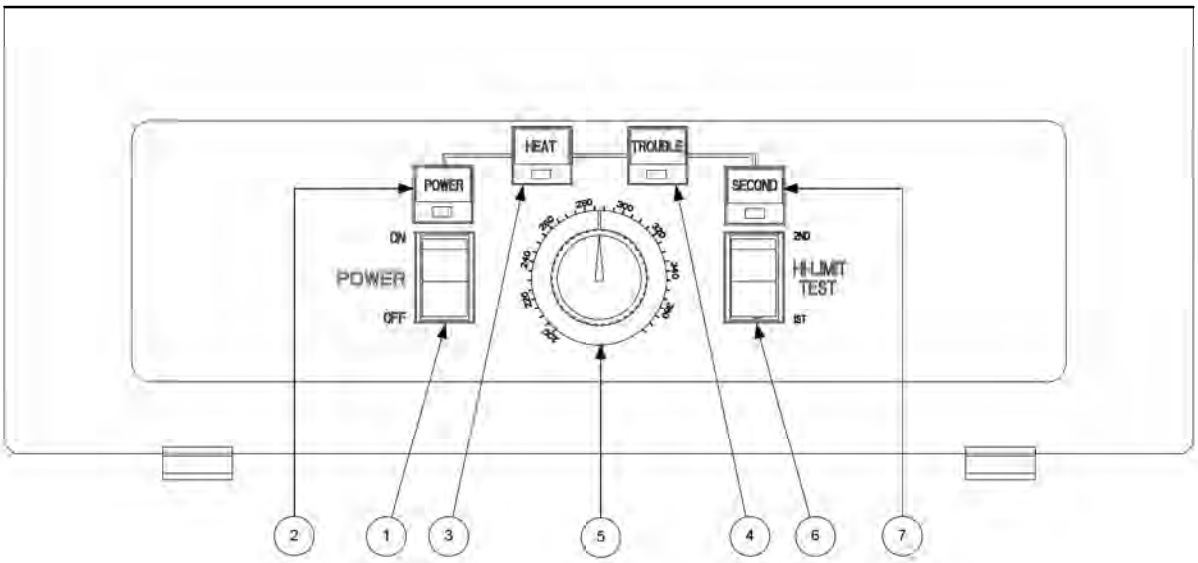

U.S. Navy Solid-State Analog Controller

ITEM	DESCRIPTION
1	Power Switch – Controls electrical power to fryer.
2	Power-On Light – Indicates when electrical power to fryer is ON.
3	Heating Mode Light – Indicates when heating element is ON.
4	Trouble Light – Indicates over high-limit or problem in heat control circuitry.
5	Thermostat Control Knob – Sets desired frying temperature.
6	Hi-Limit Test Switch – Tests high-limit thermostat.
7	Second Hi-Limit Test Light – Indicates fryer is in second high-limit test mode.

The analog controller, illustrated above, is used to adjust and maintain oil at the temperature indicated by the thermostat knob.

The fryer has two built-in high-limit protection features. If the temperature in the frypot reaches approximately 410°F, the controller opens the heat relay circuit, turning the elements off. If the temperature in the frypot reaches 450°F, a mechanical high-limit shuts off electrical power to the elements. ***The operator should periodically test each of the high-limit protection features, using the procedure at the end of this chapter, to verify that they are operating correctly.***

The analog controller has no timing features. The operator must monitor shake and pull times.

⚠ WARNING
Before pressing the power switch to the ON position, ensure that the frypot is properly filled with oil. See Section 3.1.

CONTROLLER OPERATING PROCEDURE

1. Verify that the thermostat knob is set to the desired cooking temperature.

2. Press the power switch to the ON position. The POWER light will illuminate.

3. If the frypot temperature is below 180°F, the controller will automatically enter a warm-up cycle (often called a melt cycle). The heating elements will cycle on and off repeatedly, allowing the oil to heat gradually, without scorching. During the warm-up cycle, the heating mode light will alternately illuminate and go off as the elements cycle on and off. Within about 45 minutes, the controller will exit the warm-up cycle and the heating mode light will remain continuously illuminated.

4. When the oil temperature reaches the thermostat knob setpoint, the elements will cycle OFF and the HEAT light will go off, indicating that the fryer is ready for the cooking process to begin.

HIGH-LIMIT TEST PROCEDURE

Tools Required: One 0-600°F pyrometer with sensing probe or an equivalent high-temperature thermometer.

NOTE: Conduct this test when the fryer will not be needed for about one hour and when the cooking oil is due to be changed (the test will ruin the cooking oil). Start the test with the controller turned ON and with the cooking oil at normal frying temperature. Stir the oil thoroughly to ensure even distribution and temperature.

⚠ DANGER
If the expected results (indicated by italics) for Steps 3 and 4 below do not occur, turn off the fryer at the main circuit breaker panel and do not use the fryer until it has been repaired by an authorized technician.

1. Verify that cooking oil is at the bottom OIL-LEVEL line. Add oil if necessary.

2. Turn the power switch ON and set the control knob to the normal frying temperature.

3. Insert the pyrometer probe into the frypot so that its tip is near the temperature probe on the element (i.e., approximately 5-inches into the oil, near the center of the frypot). Press and hold the high-limit test switch in the "1st" test position until the TROUBLE light illuminates. Release the test switch.

   The trouble light should have come on when the temperature was approximately 410°F (± 10°F) and the heating elements should have de-energized (indicated by the HEAT *light going out).*

Part II

4. Press and hold the high-limit test switch in the "2nd" test position until the 2nd High-Limit light illuminates. Release the switch.

   The 2nd High-Limit light should have come on when the temperature was between 430°F and 460°F.

   *For fryers connected to an external shunt power supply, **all** fryers should have been shut off completely and all control panel lights should have been extinguished. For fryers not connected to an external shunt power supply, only the fryer being tested should have been shut off.*

5. Place the controller power switch in the OFF position.

6. Allow the cooking oil to cool to below normal frying temperature. When the power switch is again placed in the ON position, the elements should re-energize and the operating thermostat should resume control of the temperature. If the TROUBLE light remains on instead, allow the oil additional time to cool.

NAVY SURFACE SHIP ELECTRIC FRYERS
CHAPTER 4: FILTRATION INSTRUCTIONS

4.1 Introduction

The FootPrint Pro filtration system allows the cooking oil or shortening in one frypot to be safely and efficiently filtered while the other frypots in a battery remain in operation. Section 4.2 covers preparation of the filter system for use. Operation of the system is covered in section 4.3.

⚠ WARNING
The work center supervisor is responsible for ensuring that operators are made aware of the inherent hazards of operating a hot oil filtering system, particularly the aspects of oil filtration, draining and cleaning procedures.

4.2 Preparing the Filter for Use

1. Rotate the pan-locking rod to either side until it clears the filter pan, then pull the pan out from the cabinet. Remove the crumb tray, hold-down ring and filter screen. Clean all components with a solution of detergent and hot water then dry thoroughly.

   The filter pan is equipped with rollers in rails, much like a kitchen drawer. The pan may be removed for cleaning or to gain access to interior components by lifting the front of the pan to disengage the front rollers, then pulling it forward until the rear rollers clear the rails. The pan cover must not be removed except for cleaning, interior access, or to allow a shortening disposal unit (SDU) to be positioned under the drain.

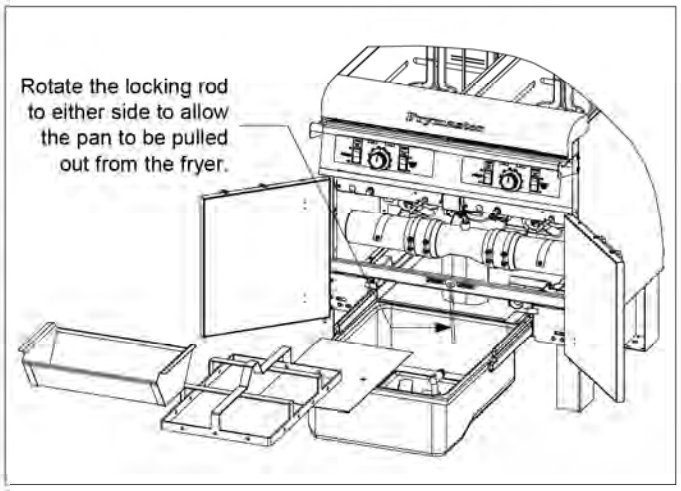

2. Inspect the filter pan connection fitting to ensure that both O-rings are in good condition. O-rings are located on the tube disconnect inside the filter pan as shown to the right.

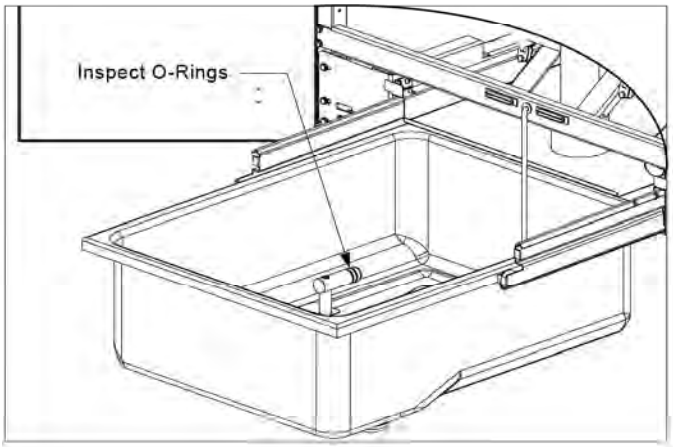

3. Place the metal filter screen in the center of the bottom of the pan, then lay a sheet of filter paper on top of the screen, overlapping on all sides.

4. Position the hold-down ring over the filter paper and lower the ring into the pan, allowing the paper to fold up around the ring as it is lowered to the bottom of the pan.

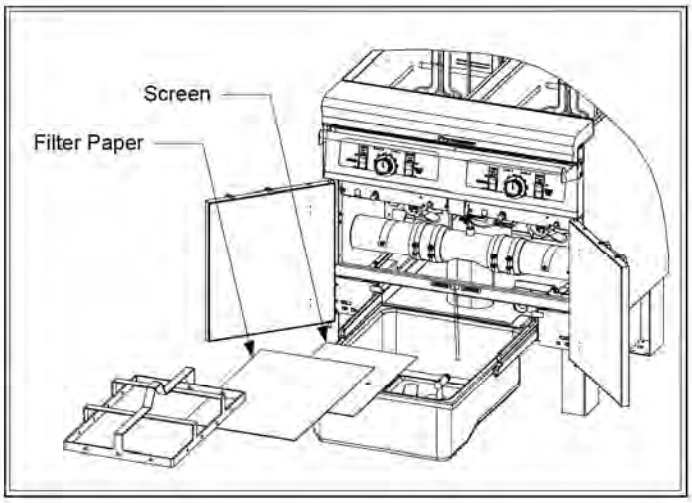

5. When the hold-down ring is in position, sprinkle one packet of filter powder evenly over the paper.

6. Replace the crumb tray in the filter pan, then push the filter pan back into the fryer, positioning it under the drain.

4.3 Operation of the Filter

⚠ DANGER

Draining and filtering of cooking oil must be accomplished with care to avoid the possibility of a serious burn caused by careless handling. The oil to be filtered is at or near 350°F. Ensure drain handles are in their proper position before operating any switches or valves. Wear all appropriate safety equipment when draining and filtering cooking oil or shortening.

⚠ DANGER

NEVER attempt to drain cooking oil from the fryer with the elements energized! Doing so will cause irreparable damage to the elements and may cause a flash fire. Doing so will also void the Frymaster warranty.

1. Ensure that the filter is prepared. See Sec. 4.2.

2. Make sure the oil is at operating temperature.

3. Turn the fryer power OFF. Drain the frypot into the filter pan by rotating the valves 90°. If necessary, use the ***Fryer's Friend*** clean-out rod to clear the drain from **inside** the frypot.

⚠ DANGER

Do not drain more than one frypot at a time into the built-in filtration unit to avoid overflow and spillage of hot oil.

⚠ DANGER

NEVER attempt to clear a clogged drain valve from the front of the valve! Hot oil will rush out creating the potential for severe burns. DO NOT hammer on the drain valve with the cleanout rod or other objects. Damage to the ball inside will result in leaks and will void the Frymaster warranty.

4. After the cooking oil has drained from the frypot, turn the filter handle to the ON position to start the pump and begin the filtering process. There may be a slight delay before the pump activates.

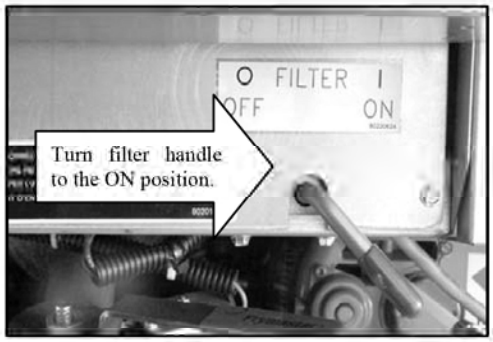

5. The filter pump draws the cooking oil through the filter medium and circulates it back up to and through the frypot during a 5-minute process called polishing. Polishing cleans the oil by trapping solid particles in the filter medium.

6. After the oil is filtered (about 5 minutes), close the drain valve and allow the fryer to refill. Let the filter pump run 10 to 12 seconds after the oil begins to bubble. Turn the filter off.

⚠ WARNING

The filter pump is equipped with a manual reset switch (see photo below) in case the filter motor overheats or an electrical fault occurs. If this switch trips, turn off power to the filter system and allow the pump motor to cool 20 minutes before attempting to reset the switch.

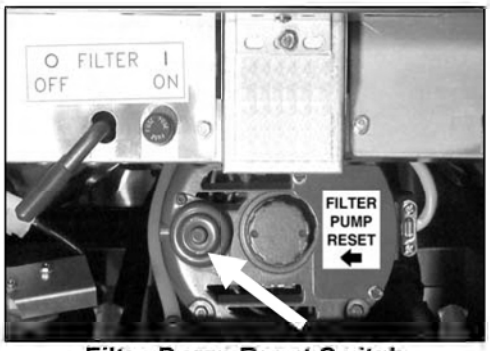

Filter Pump Reset Switch

7. Lower the elements into the frypot and reinstall the basket support rack. Ensure the drain valve is fully closed. (If the drain valve is not fully closed, the fryer will not operate.) Turn the fryer ON and allow the cooking oil to reach setpoint.

⚠ DANGER

The crumb tray must be emptied into a fireproof container at the end of frying operations each day. Some food particles can spontaneously combust if left soaking in certain shortening.

⚠ WARNING

Do not bang fry baskets or other utensils on the fryer's joiner strip. The strip is present to seal the joint between the fry vessels. Banging fry baskets on the strip to dislodge shortening will distort the strip, adversely affecting its fit. It is designed for a tight fit and should only be removed for cleaning.

4.4 Draining and Disposing of Waste Oil

When your cooking oil has reached the end of its usable life, drain the oil into an appropriate **METAL** container for transport to the disposal container. Frymaster recommends the use of the Frymaster Shortening Disposal Unit (SDU). **NOTE:** If using an SDU built before January 2004 the filter pan cover must be removed to allow the unit to be positioned beneath the drain. To remove the lid, lift up on the front edge and pull it straight out of the cabinet. Refer to the documentation furnished with the disposal unit for specific operating instructions. If a shortening disposal unit is not available, allow the oil to cool to 100°F, then drain the oil into a metal stockpot or similar metal container. When draining is finished, close the fryer drain valve securely.

⚠ DANGER

Allow oil to cool to 100°F before draining into an appropriate container for disposal. When draining oil into a disposal unit, do not fill above the maximum fill line located on the container.

NAVY SURFACE SHIP ELECTRIC FRYERS
CHAPTER 5: PREVENTIVE MAINTENANCE

5.1 Cleaning the Fryer

⚠ DANGER
The crumb tray in fryers equipped with a filter system must be emptied into a fireproof container at the end of frying operations each day. Some food particles can spontaneously combust if left soaking in certain shortening material.

⚠ DANGER
Never attempt to clean the fryer during the frying process or when the frypot is filled with hot oil. If water comes in contact with oil heated to frying temperature, it will cause spattering of the oil, which can result in severe burns to nearby personnel.

⚠ WARNING
Use a commercial-grade cleaner formulated to effectively clean and sanitize food-contact surfaces. Read the directions for use and precautionary statements before use. Particular attention must be paid to the concentration of cleaner and the length of time the cleaner remains on the food-contact surfaces.

5.1.1 Clean Inside and Outside of the Fryer Cabinet – Daily

Clean inside the fryer cabinet with a dry, clean cloth. Wipe all accessible metal surfaces and components to remove accumulated oil/shortening and dust.

Clean outside the fryer cabinet, with a clean, damp cloth soaked with dishwashing detergent. Wipe with a clean, damp cloth.

5.1.2 Clean the Built-in Filtration System – Daily

⚠ WARNING
Never drain water into the filter pan. Water will damage the filter pump.

There are no periodic preventive maintenance checks and services required for the FootPrint Pro Filtration System other than daily cleaning of the filter pan and associated components with a solution of hot water and detergent.

5.1.3 Clean the Frypot and Heating Elements – Weekly

⚠ DANGER
Never operate the appliance with an empty frypot. The frypot must be filled with water or cooking oil before energizing the elements. Failure to do so will result in irreparable damage to the elements and may cause a fire.

Boiling Out the Frypot

Before the fryer is first used, it should be boiled out to ensure that residue from the manufacturing process has been eliminated. Also, after the fryer has been in use for a period of time, a hard film of caramelized vegetable oil will form on the inside of the frypot. This film should be periodically removed by following the boil-out procedure that follows.

1. Before switching the fryer(s) ON, close the frypot drain valve(s), then fill the empty frypot with a mixture of cold water and dishwashing detergent. Follow instructions on detergent container when mixing.

2. Press the fryer ON/OFF switch to the ON position.

3. Set the temperature control knob to the lowest setting.

4. Simmer the solution for 45 minutes to one hour. Do not allow the water level to drop below the bottom oil-level line in the frypot during the boil-out operation.

⚠ DANGER
Never leave the fryer unattended during the boil-out process. If the boil-out solution boils over, turn the fryer off immediately and let the solution cool for a few minutes before resuming the process.

5. Turn the fryer ON/OFF switch(s) to the OFF position.

6. Add two gallons of water. Drain out the solution and clean the frypot(s) thoroughly.

⚠ WARNING
Do not drain boil-out solution into a shortening disposal unit, a built-in filtration unit, or a portable filter unit. These units are not intended for this purpose, and will be damaged by the solution.

7. Refill the frypot(s) with clean water. Rinse the frypot(s) twice, drain and dry with a clean towel. Thoroughly remove all water from the frypot and elements before refilling the frypot with cooking oil.

⚠ DANGER
Remove all drops of water from the frypot before filling with cooking oil. Failure to do so will cause spattering of hot liquid when the oil is heated to cooking temperature.

5.1.4 Clean Detachable Parts and Accessories – Weekly

Wipe all detachable parts and accessories with a clean, dry cloth. Use a clean cloth saturated with detergent to remove accumulated carbonized oil on detachable parts and accessories. Rinse the parts and accessories thoroughly with clean water and wipe dry before reinstalling.

5.2 Check Calibration of Temperature Control Knob – Monthly

1. After the cooking oil reaches operating temperature, let the heating elements cycle at least four times (indicated by the HEAT light going out and coming back on).

2. Insert a thermometer or pyrometer probe near the temperature-sensing probe approximately five inches deep into the cooking oil. When the heating elements cycle on for the fourth time, the thermometer should read within ±5°F of the temperature control knob setting.

3. If the knob requires adjustment:

   a. Loosen the setscrew in the control knob until the outer shell of the knob will rotate on the insert inside the knob.

   b. Rotate the outer shell of the knob until the index line on the knob aligns with the mark that corresponds to the thermometer or pyrometer reading.

   c. Hold the knob and tighten the setscrew.

   d. Recheck the thermometer or pyrometer reading and the temperature control knob setting the next time the HEAT light illuminates.

   e. Repeat steps a through d until the thermometer or pyrometer reading and the knob setting agree within 5°F.

5.3 Annual/Periodic System Inspection

This appliance should be inspected and adjusted periodically by qualified service personnel as part of the galley material maintenance management (3M) program.

Frymaster recommends that a Factory Authorized Service Technician inspect this appliance at least annually as follows:

Fryer

- Inspect the cabinet inside and out, front and rear for excessive oil.
- Verify that the heating element wires are in good condition and that leads have no visible fraying or insulation damage and that they are free of oil.
- Verify that heating elements are in good condition with no carbon/caramelized oil build-up. Inspect the elements for signs of extensive dry-firing.
- Verify that the tilt mechanism is working properly when lifting and lowering elements, and that the element wires are not binding and/or chafing.
- Verify the heating-element amp-draw is within the allowed range as indicated on the appliance's rating plate.
- Verify that the temperature and high-limit probes are properly connected, tightened and functioning properly, and that mounting hardware and probe guards are present and properly installed.
- Verify that component box and contactor box components (i.e. controller, relays, interface boards, transformers, contactors, etc.) are in good condition and free from oil and other debris.
- Verify that component box and contactor box wiring connections are tight and that wiring is in good condition.
- Verify that all safety features (i.e. contactor shields, drain safety switches, reset switches, etc.) are present and functioning properly.
- Verify that the frypot is in good condition and free of leaks and that the frypot insulation is in serviceable condition.
- Verify that all wiring harnesses and wiring connections are tight and in good condition.

Built-In Filtration System

- Inspect all oil-return and drain lines for leaks and verify that all connections are tight.
- Inspect the filter pan for leaks and cleanliness. If there is a large accumulation of crumbs in the crumb basket, instruct the work center supervisor/watch supervisor that the crumb basket must be emptied into a fireproof container and cleaned daily.

- Verify that all O-rings and seals (including those on the quick-disconnect fittings) are present and in good condition. Replace O-rings and seals if worn or damaged.
- Check filtration system integrity as follows:
- Verify that filter pan cover is present and properly installed.
- With the filter pan empty, place each oil return handle, one at a time, in the ON position. Verify that the pump activates and that bubbles appear in the oil of the associated frypot.
- Close all oil return valves (i.e., place all oil return handles in the OFF position). Verify proper functioning of each oil return valve by activating the filter pump using the lever on one of the oil return handle microswitches. No air bubbles should be visible in any frypot.
- Verify that the filter pan is properly prepared for filtering, then drain a frypot of oil heated to 350°F into the filter pan and close the frypot drain valve. Place the oil return handle in the ON position. Allow all oil to return to the frypot indicated by bubbles in the cooking oil. Return the oil return handle to the OFF position. The frypot should have refilled in no more than 2 minutes and 30 seconds.

NAVY SURFACE SHIP ELECTRIC FRYERS
CHAPTER 6: OPERATOR TROUBLESHOOTING

6.1 Introduction

This section provides an easy reference guide to some of the common problems that may occur during the operation of this equipment. The troubleshooting guides that follow are intended to help correct, or at least accurately diagnose, problems with this equipment. Although the chapter covers the most common problems reported, you may encounter problems that are not covered. In such instances, the Frymaster Technical Services staff will make every effort to help you identify and resolve the problem.

When troubleshooting a problem, always use a process of elimination starting with the simplest solution and working through to the most complex. Never overlook the obvious – anyone can forget to plug in a cord or fail to close a valve completely. Most importantly, always try to establish a clear idea of why a problem has occurred. Part of any corrective action involves taking steps to ensure that it doesn't happen again. If a controller malfunctions because of a poor connection, check all other connections, too. If a fuse continues to blow, find out why. Always keep in mind that failure of a small component may often be indicative of potential failure or incorrect functioning of a more important component or system.

Before calling a service agent or the Frymaster HOTLINE (1-800-551-8633) or contacting via e-mail at service@frymaster.com:

- **Verify that power is connected and that circuit breakers are on.**
- **Verify that frypot drain valves are fully closed.**

⚠ DANGER

Hot cooking oil will cause severe burns. Never attempt to move this appliance when filled with hot cooking oil or to transfer hot cooking oil from one container to another.

⚠ DANGER

This equipment should be disconnected from the electrical power supply when servicing, except when electrical circuit tests are required. Use extreme care when performing such tests.

This appliance may have more than one electrical power supply connection point. Disconnect all power supplies before servicing.

Inspection, testing, and repair of electrical components should be performed by authorized personnel only.

6.2 Troubleshooting

6.2.1 Control and Heating Problems

Problem	Probable Causes	Corrective Action
Controller won't activate.	A. Power cord is not plugged in or circuit breaker is tripped.	A. Plug power cord in and verify that circuit breaker is not tripped.
	B. Controller has failed.	B. If available, substitute a controller known to be working for the suspect controller. If the substitute controller functions correctly, order a new controller.
	C. Power supply component or interface board has failed.	C. If any of the components in the power supply system (including the transformer and interface board) fail, power will not be supplied to the controller and it will not function. Determining which component has failed is beyond the scope of operator troubleshooting. Call FASC.
Fryer does not heat.	A. Drain valve is open.	A. This fryer is equipped with a drain safety switch that prevents the heating element from being energized if the drain valve is not fully closed. Verify that the drain valve is fully closed.
	B. Controller has failed.	B. If available, substitute a controller known to be working for the suspect controller. If the substitute controller functions correctly, order a new controller.
	C. One or more other components have failed.	C. If the circuitry in the fryer control system cannot determine the frypot temperature, the system will not allow the element to be energized or will de-energize the element if it is already energized. If the contactor, element, or associated wiring fails, the element will not energize. Determining which specific component is malfunctioning is beyond the scope of operator troubleshooting. Call FASC.

Problem	Probable Causes	Corrective Action
Fryer repeatedly cycles on and off when first started.	Fryer is in melt-cycle mode.	This is normal. The standard operational mode for the controller is for the elements to cycle on and off until the temperature in the frypot reaches 180°F (82°C). The purpose of the melt-cycle is to allow controlled melting of solid shortening to prevent scorching and flash fires or damage to the element.
Fryer does not heat after filtering.	Drain valve is open.	This fryer is equipped with a drain safety switch that prevents the heating element from being energized if the drain valve is not fully closed. Verify that the drain valve is fully closed.
Fryer heats until high limit trips with heat indicator ON.	Temperature probe or controller has failed.	If available, substitute a controller known to be working for the suspect controller. If the substitute controller functions correctly, order a new controller. If substitution of the controller does not resolve the problem, the most likely cause is a failed temperature probe.
Fryer heats until high limit trips without heat indicator ON.	Contactor or controller has failed.	If available, substitute a controller known to be working for the suspect controller. If the substitute controller functions correctly, order a new controller. If substitution of the controller does not resolve the problem, the most likely cause is a contactor failed in the closed position.
Fryer stops heating with heat indicator ON.	The high limit thermostat or contactor has failed.	The fact that the heat indicator is ON indicates that the controller is functioning properly and is calling for heat. The high limit thermostat functions as a normally closed switch. If the thermostat fails, the "switch" opens and power to the elements is shut off. If the contactor fails to close, no power is supplied to the elements. Determining which component has failed is beyond the scope of operator troubleshooting. Call FASC.

6.2.2 Error Messages and Display Problems

Problem	Probable Causes	Corrective Action
Controller trouble light ON.	Oil temperature above acceptable range or a problem with the temperature measuring circuitry.	This in an indication of a malfunction in the temperature measuring or control circuitry, including a failure of the high limit thermostat. Determining the specific problem is beyond the scope of operator troubleshooting. Shut the fryer down immediately.
Controller trouble light ON and heating mode light ON.	Open drain valve or problem with latching circuits	Verify that the drain valve is fully closed. The fryer will not function if the drain valve is not fully closed. If the drain valve is fully closed, the problem is within the latching circuitry and is beyond the scope of operator troubleshooting.

6.2.3 Filtration Problems

Problem	Probable Causes	Corrective Action
Filter pump won't start.	A. Power cord is not plugged in or circuit breaker is tripped.	A. Verify that the power cord is fully plugged in. If so, verify that circuit breaker is not tripped.
	B. Pump motor has overheated causing the thermal overload switch to trip.	B. If the motor is too hot to touch for more than a few seconds, the thermal overload switch has probably tripped. Allow the motor to cool at least 20 minutes then press the Pump Reset Switch.
	C. Blockage in filter pump. **Test:** Close the drain valve and pull the filter pan out from the fryer. Activate the pump. If the pump motor hums for a short time then stops, the probable cause is blockage of the pump itself.	C. Pump blockages are usually caused by sediment buildup in the pump due to improperly sized or installed filter paper and failure to use the crumb screen.

(continued on following page)

Problem	Probable Causes	Corrective Action
Filter pump runs but oil does not return to frypot and there is no bubbling oil.	Blockage in filter pan suction tube. **Test:** Close the drain valve and pull the filter pan out from the fryer. Activate the pump. If bubbling oil occurs, there is a blockage in the filter pan suction tube.	The blockage may be caused by sediment buildup or, if solid shortening is used, solidified shortening in the tube. Use a thin, flexible wire to remove the blockage. If the blockage cannot be removed, call FASC.
Filter pump runs, but oil return is very slow and bubbling oil occurs.	A. Improperly installed filter pan components.	A. Verify that filter screen is in bottom of pan with paper top of screen. Verify that O-rings are present and in good condition on filter pan connection fitting.
	B. Attempting to filter with oil or shortening that is not hot enough.	B. In order to properly filter, the oil or shortening should be at or near 350°F (177°C). At temperatures lower than this, the oil becomes too thick to pass through the filter medium easily, resulting in much slower oil return and eventual overheating of the filter pump motor. Make sure oil is at or near frying temperature before draining oil into filter pan.

NAVY SURFACE SHIP ELECTRIC FRYERS
CHAPTER 7: SERVICE PROCEDURES

7.1 General

Before performing any maintenance on this equipment, disconnect the fryer from the electrical power supply.

When electrical wires are disconnected, it is recommended that they be marked in such a way as to facilitate re-assembly.

7.2 Replacing a Controller

1. Disconnect the fryers from the electrical power supply.

2. The controller bezel is held in place by tabs at the top and bottom. Slide the bezel up to disengage the lower tabs. Then slide the bezel down to disengage the upper tabs. If applicable, remove the top two screws holding the controller to the control panel frame. The control panel is hinged at the bottom and will swing open from the top.

3. Unplug the wiring harness from the connector on the back of the controller and disconnect the grounding wire from terminal adjacent to the connector. Remove the control panel assembly by lifting it from the hinged slots in the control panel frame.

4. Remove the controller from the control panel assembly and install the replacement controller. Reinstall the control panel assembly by reversing steps 1 and 2.

7.3 Replacing Component Box Components

1. Remove the control panel (see steps 1 - 3 of section 7.2 on the preceding page).

2. Unplug the wiring harness from the 15-pin connector on the interface board and disconnect the grounding wire from terminal adjacent to the 15-pin connector on the back of the controller. Remove the control panel assembly by lifting it from the hinge slots in the control panel frame.

3. Disconnect the wiring from the component to be replaced, being sure to make a note of where each wire was connected.

4. Dismount the component to be replaced and install the new component, being sure that any required spacers, insulation, washers, etc. are in place.

   NOTE: If more room to work is required, the control panel frame assembly may be removed by removing the hex head screws that secure it to the fryer cabinet (see illustration below). If this option is chosen, all front panel assemblies must be removed per steps 2-4 above. The cover plate on the lower front of the component box may also be removed if desired. *Removing the component box itself from the fryer is not recommended due to the difficulty involved in disconnecting and reconnecting the oil-return valve rods, which pass through openings in the component box.*

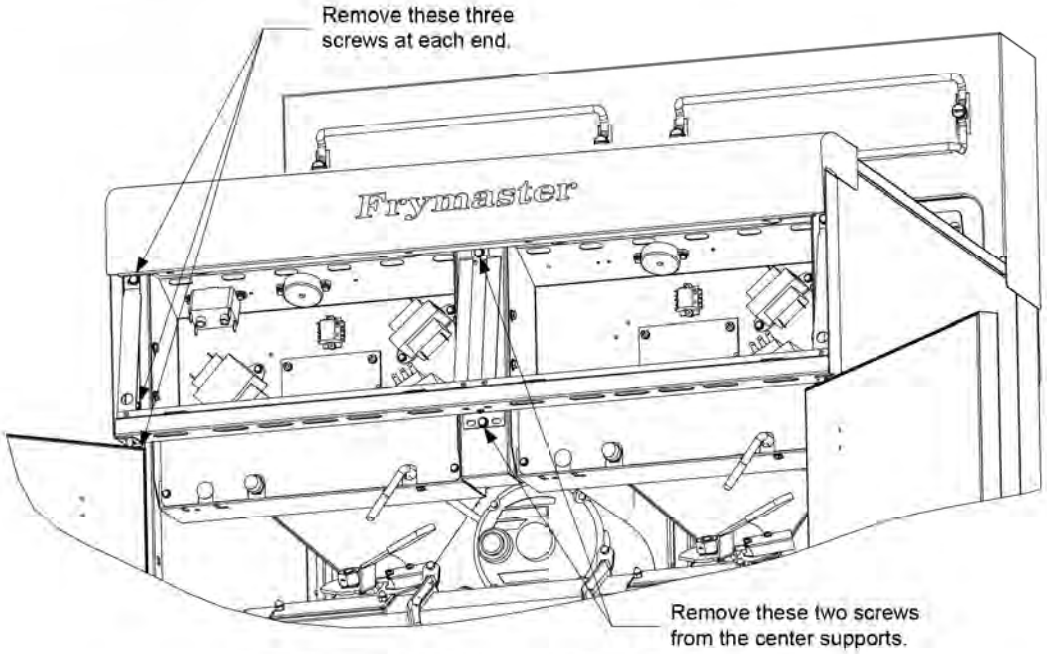

Removing the Control Panel Frame and Top Cap Assembly

5. Reconnect the wiring disconnected in Steps 2 and 3, referring to your notes and the wiring diagrams on the fryer door to ensure that the connections are properly made. Also, verify that no other wiring was disconnected accidentally during the replacement process.

6. Reverse steps 1-4 to complete the replacement and return the fryer to service.

7.4 Replacing a High-Limit Thermostat

1. Remove the filter pan and lid from the unit. Drain the frypots into a Shortening Disposal Unit (SDU) or other appropriate metal container.

⚠ DANGER
DO NOT drain more than one full frypot or two split frypots into the SDU at one time.

2. Disconnect the fryer from the electrical power supply and reposition it to gain access to the rear of the fryer.

3. Remove the four screws from both the left and right sides of the lower back panel.
4. Locate the high-limit that is being replaced and follow the two-black wires to the 12-pin connector C-6. Note where the leads are connected prior to removing them from the connector. Unplug the 12-pin connector C-6 and using a pin-pusher push the pins of the high-limit out of the connector.
5. Using a wrench, carefully unscrew the high-limit thermostat to be replaced.
6. Apply Loctite™ PST 567 or equivalent sealant to the threads of the replacement and screw it securely into the frypot.
7. Insert the leads into the 12-pin connector C-6 (see illustration below). For full-vat units or the left half of a dual-vat unit (as viewed from the rear of the fryer) the leads go into positions 1 and 2 of the connector. For the right half of a dual-vat unit (as viewed from the rear of the fryer), the leads go into positions 7 and 8. In either case, polarity does not matter.

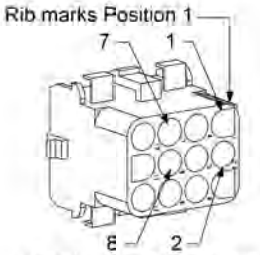

High-Limit Lead Positions

8. Reconnect the 12-pin connecting plug C-6. Use wire ties to secure any loose wires.
9. Reinstall the back panels reposition the fryer under the exhaust hood, and reconnect it to the electrical power supply to return the fryer to service.

7.5 Replacing a Temperature Probe

1. Remove the filter pan and lid from the unit. Drain the frypots into a Shortening Disposal Unit (SDU) or other appropriate metal container.

⚠ DANGER
DO NOT drain more than one full frypot or two split frypots into the SDU at one time.

2. Disconnect the fryer from the electrical power supply and reposition it to gain access to the rear of the fryer.
3. Remove the four screws from both sides of the lower back panel. Then remove the two screws on both the left and right sides of the back of the tilt housing. Lift the tilt housing straight up to remove from the fryer.
4. Locate the red and white wires of the temperature probe to be replaced. Note where the leads are connected prior to removing them from the connector. Unplug the 12-pin connector C-6 and using a pin-pusher push the pins of the temperature probe out of the connector.
5. Raise the element and remove the securing probe bracket and metal tie wraps that secure the probe to the element (see illustration on the following page).

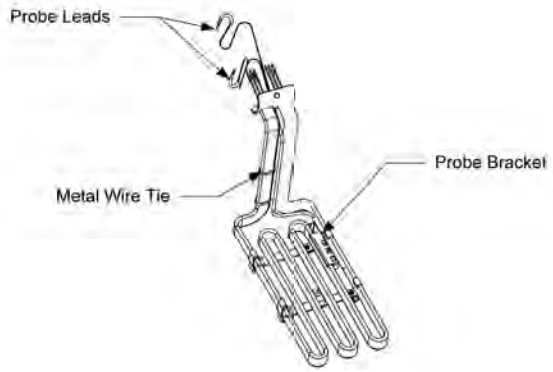

6. Gently pull on the temperature probe and grommet. Pulling the wires up the rear of the fryer and through the element tube assembly.
7. Insert the replacement temperature probe (wires first) into the tube assembly ensuring that the grommet is in place. Secure the probe to the elements using the bracket which was removed in Step 5 and the metal tie wraps which were included in the replacement kit.
8. Route the probe wires out of the tube assembly following the element wires down the back of the fryer through the Heyco bushings to the 12-pin connector C-6. Secure the wires to the sheathing with wire ties.
9. Insert the temperature probe leads into the 12-pin connector C-6 (see illustration below). For full-vat units or the right half of a dual-vat unit (as viewed from the rear of the fryer) the red lead goes into position 3 and the white lead into position 4 of the connector. For the left half of a dual-vat unit (as viewed from the rear of the fryer), the red lead goes into position 9 and the white lead into position 10. **NOTE:** ***Right*** and ***left*** refer to the fryer as viewed from the rear.

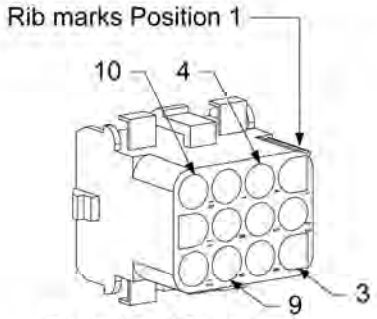

Probe Lead Positions

10. Secure any loose wires with wire ties making sure that the lead wires will not interfere with the movement of the springs. Rotate the elements up and down making sure that movement is not restricted and that the wires are not pinched.
11. Reinstall the tilt housing and back panels, reposition the fryer under the exhaust hood, and reconnect it to the electrical power supply to return the fryer to service.

7.6 Replacing a Heating Element

1. Perform steps 1-3 of section 7.5, *Replacing a Temperature Probe*.

2. On dual-vat fryers, and on full-vat fryers where the temperature probe is attached to the element being replaced, disconnect the wire harness containing the probe wiring. Using a pin pusher, disconnect the probe wires from the 12-pin connector C-6.

3. In the rear of the fryer directly behind the frypot disconnect the 6-pin connector for the left element (as viewed from the front of the fryer) or the 9-pin connector for the right element. Press in on the tabs on each side of the connector while pulling outward on the free end to extend the connector and release the element leads (see photo below). Pull the leads out of the connector and out of the wire sleeving.

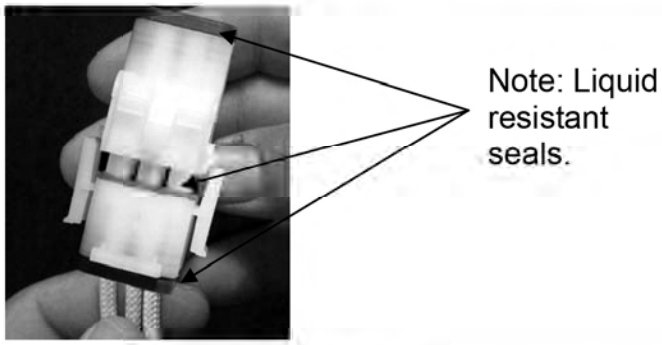

4. Raise the element to the full up position and support the elements.

5. Remove the hex head screws and nuts that secure the element to the tube assembly and pull the element out of the frypot. **NOTE:** Full-vat elements consist of two dual-vat elements clamped together. For full-vat units, remove the element clamps before removing the nuts and screws that secure the element to the tube assembly.

6. If applicable, recover the probe bracket and probe from the element being replaced and install them on the replacement element, then install the replacement element in the frypot, securing it with the nuts and screws removed in Step 5 to the tube assembly ensuring the gasket is between the tube and element assembly.

7. Route the element leads through the element tube assembly and into the wire sleeving to prevent chafing. Ensure that the wire sleeving is routed back through the Heyco bushing keeping it clear from the lift springs. Also ensure that the wire sleeving extends into the tube assembly to protect the edge of the tube assembly from chafing the wires. Press the pins into the connector in accordance with the diagram below, and then close the connector to lock the leads in place. **NOTE:** It is critical that the wires be routed through the sleeving to prevent chafing.

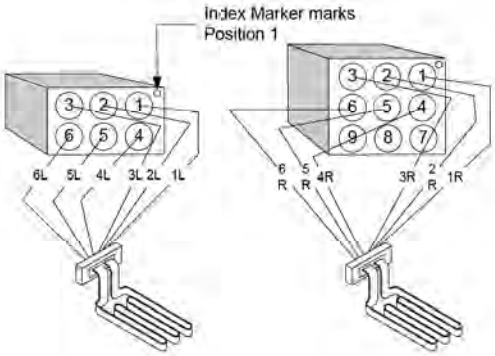

8. Reconnect the element connector it was removed from directly behind the frypot, ensuring that the latches lock.
9. Insert the temperature probe leads into the 12-pin wiring harness connector C-6 (see illustration below). For full-vat units or the right half of a dual-vat unit, the red lead goes into position 3 and the white into position 4. For the left half of a dual-vat unit, the red lead goes into position 9 and the white into position 10. **NOTE:** ***Right*** and ***left*** refer to the fryer as viewed from the rear.

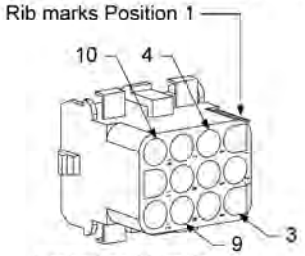

Probe Lead Positions

10. Reconnect the 12-pin connector C-6 of the wiring harness disconnected in Step 2.
11. Lower the element down onto the basket rack.
12. Reinstall the tilt housing and back panels, reposition the fryer under the exhaust hood, and reconnect it to the electrical power supply.

7.7 Replacing Contactor Box Components

1. If replacing a contactor box component above the built-in filter system, remove the filter pan and lid from the unit. Drain the frypots into a Shortening Disposal Unit (SDU) or other appropriate metal container. If replacing a contactor box component in a non-filter unit or a frypot that's not over the filter pan, drain the frypot above the box into a Shortening Disposal Unit (SDU) or other appropriate metal container.

⚠ DANGER
<u>DO NOT</u> drain more than one full frypot or two split frypots into the SDU at one time.

2. Disconnect the fryer from the electrical power supply.
3. Remove the two screws securing the cover of the contactor box. The contactor boxes above the filter pan are accessed by sliding under the fryer. They are located to the left and right above the guide rails (see photo below). The contactor boxes of non-filter units or frypots not over the filter pan are accessed by opening the fryer door directly under the affected frypot.

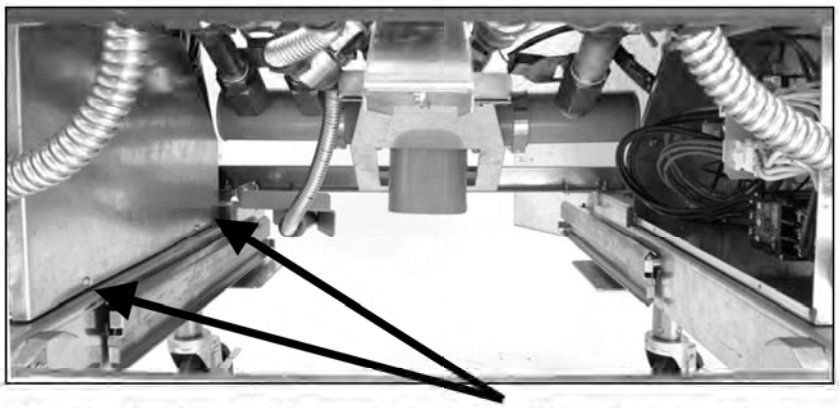
Remove two screws to access contactor box components above the filter pan.

4. The contactors and relays are held on by threaded pin studs so that only removal of the nut is required to replace the component.

5. After performing necessary service, reverse steps 1-4 to return the fryer to operation.

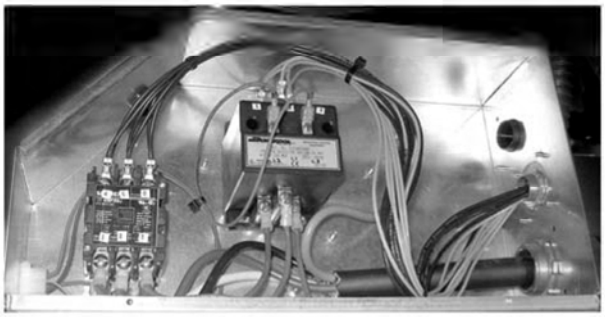

Left and right views of mechanical contactor box components.

7.8 Replacing a Frypot

1. Drain the frypot into the filter pan or, if replacing a frypot over the filter system, into a Shortening Disposal Unit (SDU) or other appropriate metal container. If replacing a frypot over the filter system, remove the filter pan and lid from the unit.

⚠ DANGER
DO NOT drain more than one full frypot or two split frypots into the SDU at one time.

2. Disconnect the fryer from the electrical power supply and reposition it to gain access to both the front and rear.

3. Slide the metal bezel up to release the bottom tabs, then slide the bezel down to disengage the upper tabs.
4. Remove the two screws from the upper corners of the control panels and allow them to swing down (see illustration and photo on page 7-1).

5. Unplug the wiring harnesses and ground wires from the backs of the controllers. Remove the controllers by lifting them from the hinge slots in the control panel frame.

6. Remove the tilt housing and back panels from the fryer. The tilt housing must be removed first in order to remove the upper back panel.

7. To remove the tilt housing remove the hex head screws from the rear edge of the housing. The housing can be lifted straight up and off the fryer.

8. Remove the control panel by removing the screw in the center and the nuts on both sides.

9. Loosen the component boxes by removing the screws, which secure them in the cabinet.

10. Dismount the top cap by removing the nuts at each end that secure it to the cabinetry.

11. Remove the hex head screw that secures the front of the frypot to the cabinet cross brace.

12. Remove the top-connecting strip that covers the joint with the adjacent frypot.

13. Unscrew the Teflon vent/vacuum-breaker tube fitting, unscrew the nut located on the front of each section of drain tube, and remove the tube assembly from the fryer.

14. Remove the covers from the drain safety switch(es) and disconnect the switch wiring at the switch(es).

15. At the rear of the fryer, unplug the 12-pin connector C-6 and, using a pin pusher, disconnect the high-limit thermostat leads.

16. Disconnect the oil return flexline(s) at the frypot end(s).

17. Raise the elements to the "up" position and disconnect the element springs.

18. Remove the machine screws and nuts that secure the element tube assembly to the frypot. Carefully lift the element assembly from the frypot and secure it to the cross brace on the rear of the fryer with wire ties or tape.

19. Carefully lift the frypot from the fryer and place it upside down on a stable work surface.

20. Recover the drain valve(s), oil return flexline connection fitting(s), and high-limit thermostat(s) from the frypot. Clean the threads and apply Loctite™ PST 567 or equivalent sealant to the threads of the recovered parts and install them in the replacement frypot.

21. Carefully lower the replacement frypot into the fryer. Reinstall the hex head screw removed in step 7 to attach the frypot to the fryer.

22. Position the element tube assembly in the frypot and reinstall the machine screws and nuts removed in step 18.

23. Reconnect the oil return flexlines to the frypot, and replace aluminum tape, if necessary, to secure heater strips to the flexlines.

24. Insert the high-limit thermostat leads disconnected in step 15 (see illustration on page 7-3 for pin positions).

25. Reconnect the drain safety switch wiring to the switch(es) in accordance with the diagram below then reinstall the switch covers.

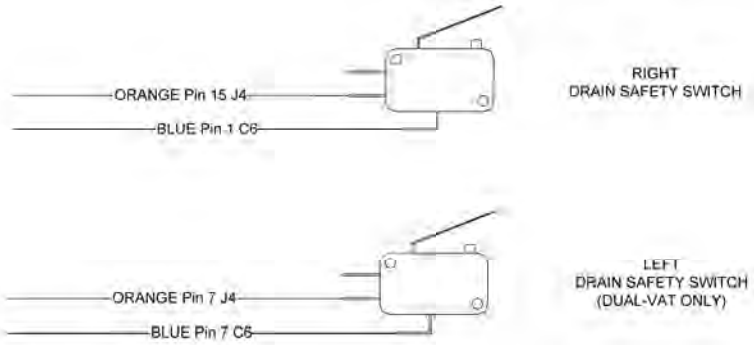

26. Reinstall the drain tube assembly.

27. Reinstall the top connecting strips, top cap, tilt housing and back panels.

28. Reinstall controllers in the control panel frame and reconnect the wiring harnesses and ground wires.

29. Reposition the fryer under the exhaust hood and reconnect it to the electrical power supply.

7.9 Built-in Filtration System Service Procedures

7.9.1 Filtration System Problem Resolution

One of the most common causes of filtration problems is placing the filter paper on the bottom of the filter pan rather than over the filter screen.

⚠ CAUTION

Ensure that filter screen is in place prior to filter paper placement and filter pump operation. Improper screen placement is the primary cause of filtration system malfunction.

Whenever the complaint is "the pump is running, but no oil is being filtered," check the installation of the filter paper, and ensure that the correct size is being used. While you are checking the filter paper, verify that the O-ring on the bottom of the filter pan is present and in good condition. A missing or worn O-ring allows the pump to take in air and decreases its efficiency. Also, oil leaks on the floor each time a vat is drained.

If the pump motor overheats, the thermal overload will trip and the motor will not start until it is reset. If the pump motor does not start, press the red reset switch (button) located on the rear of the motor.

If the pump starts after resetting the thermal overload switch, then something is causing the motor to overheat. A major cause of overheating is when several frypots are filtered sequentially, overheating the pump and motor. Allow the pump motor to cool at least 30 minutes before resuming operation. Pump overheating can be caused by:

- Solidified shortening in the pan or filter lines, or
- Attempting to filter unheated oil or shortening (cold oil and shortening are more viscous, overloading the pump motor and causing it to overheat).

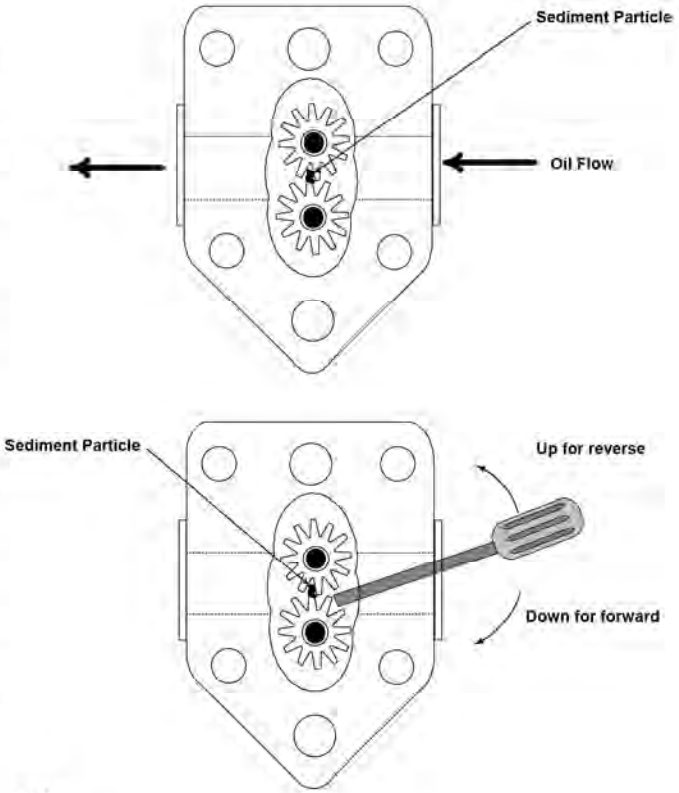

If the motor runs but the pump does not, there is a blockage in the pump. Incorrectly sized or installed paper/pads will allow food

particles and sediment to pass through the filter pan and into the pump. When sediment enters the pump, the gears bind, causing the motor to overload, again tripping the thermal overload. Shortening that has solidified in the pump will also cause it to seize, with the same result.

A pump seized by debris or hard shortening can usually be freed by manually moving the gears with a screwdriver or other instrument.

Disconnect power to the filter system, remove the input plumbing from the pump, and use a screwdriver to manually turn the gears.

- Turning the pump gears in reverse will release a hard particle.
- Turning the pump gears forward will push softer objects and solid shortening through the pump and allow free movement of the gears.

Incorrectly sized or installed paper/pads will also allow food particles and sediment to pass through and clog the suction tube on the bottom of the filter pan. Particles large enough to block the suction tube may indicate that the crumb tray is not being used. Pan blockage can also occur if shortening is left in the pan and allowed to solidify. Blockage removal can be accomplished by forcing the item out with an auger or drain snake. Compressed air or other pressurized gases should not be used to force out the blockage.

7.9.2 Replacing the Filter Motor, Filter Pump, and Related Components

1. Remove the filter pan and lid from the unit. Drain the frypots into a Shortening Disposal Unit (SDU) or other appropriate metal container.

⚠ DANGER
DO NOT drain more than one full frypot or two split frypots into the SDU at one time.

2. Disconnect the fryer from the electrical power supply and reposition it to gain access to both the front and rear.
3. Disconnect the two flexlines running to the oil-return manifold at the rear of the fryer as well as the pump suction flexline at the end of the filter pan connection (see photo below).

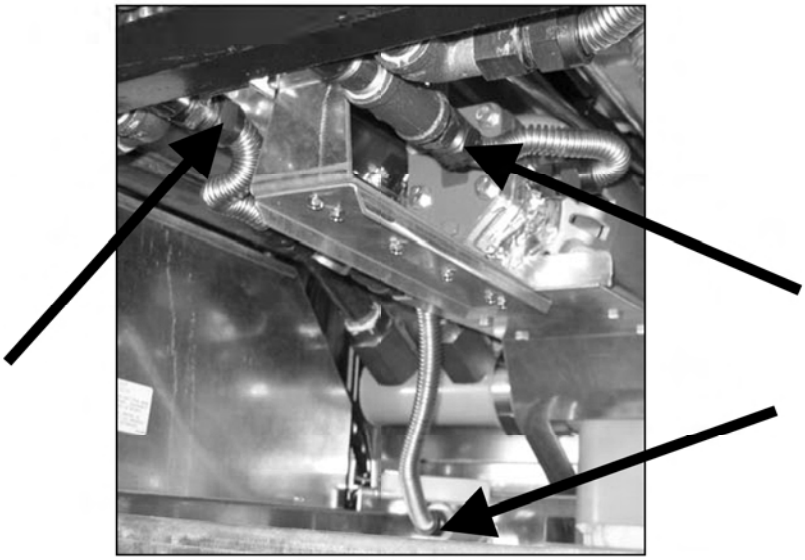

Disconnect flexlines indicated by the arrows.

4. Loosen the nut and bolt that secures the bridge to the oil-return manifold.

5. Remove the cover plate from the front of the motor and disconnect the motor wires.

6. Unplug the pump motor assembly 6-pin connector C-2 and, using a pin pusher, disconnect the vent vacuum-breaker solenoid (pins 2 and 5) that is attached to the oil return manifold.

7. Remove the two nuts and bolts that secure the front of the bridge to the cross brace and carefully slide the bridge rearward off the cross brace until its front end can be lowered to the floor. Undo the single nut holding it in place in back. Be careful not to let the rear of the bridge slip off the manifold at this point.

8. Get a good grip on the bridge, carefully pull it forward off the oil-return manifold, and lower the entire assembly to the floor. Once on the floor, pull the assembly out the front of the fryer.

9. When required service has been completed, reverse steps 6-12 to reinstall the bridge. **NOTE:** The black motor wires go on the top terminal, the white on the bottom. The pump solenoid valve wires go in positions 1 and 4 of the 6-pin connector C-2; the vent vacuum-breaker solenoid valve wires go in positions 2 and 5; the red/black heater tape wires go into position 3 and the violet/white wires go into position 6 (see illustration below).

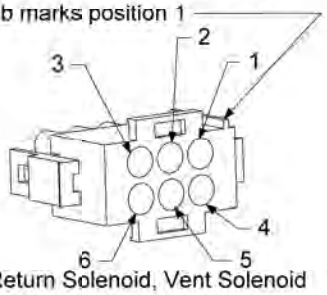

Oil Return Solenoid, Vent Solenoid and Heater Lead Positions

10. Reconnect the unit to the electrical power supply, and verify that the pump is functioning correctly (i.e., when a filter handle is placed in the ON position, the motor should start and there should be strong suction at the intake fitting and outflow at the rear flush port.)

11. When proper operation has been verified, reinstall the back panels and the filter pan and lid.

12. Reposition the fryer under the exhaust hood and reconnect it to the electrical power supply to return the fryer to service.

7.9.3 Replacing the Filter Transformer or Filter Relay

Remove the left controller from the fryer to expose the interior of the left component box. The filter transformer and relay are located as shown in the illustration below. **NOTE:** The right component box is identical to the left except that the filter transformer and relay are not present.

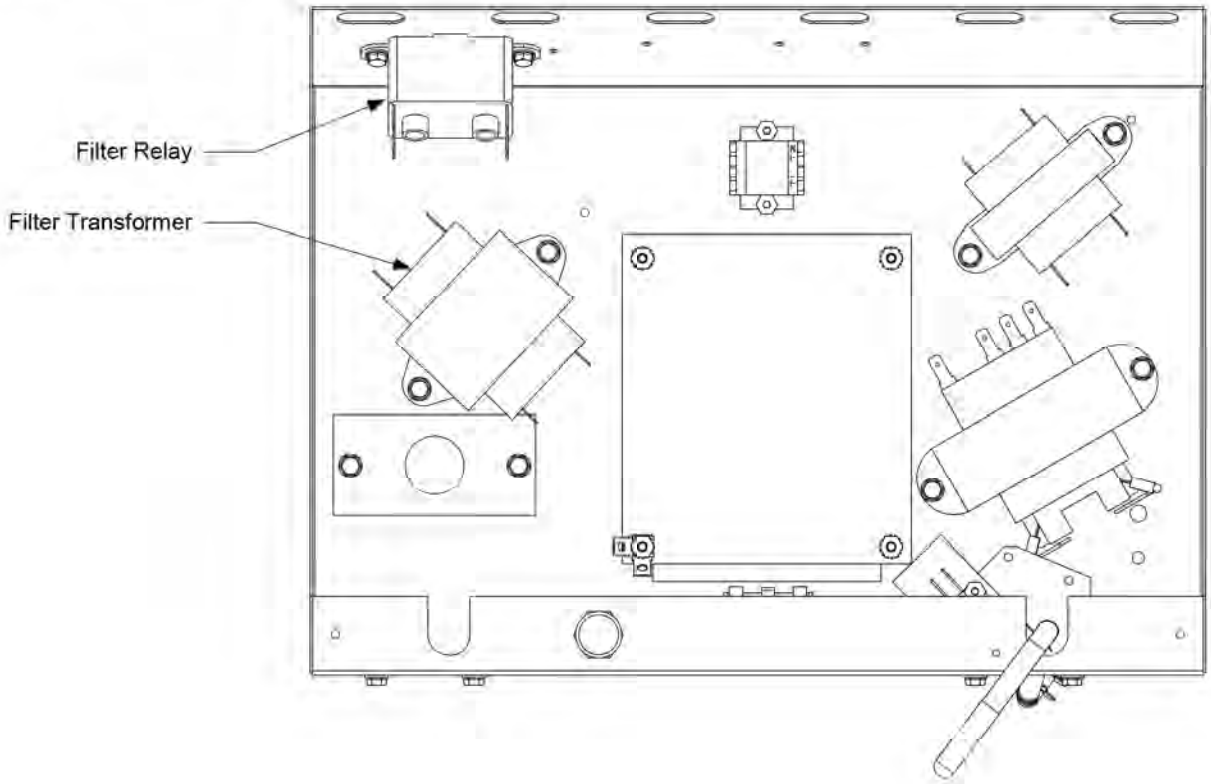

7.10 Interface Board Diagnostic Chart

The following diagram and charts provide ten quick system checks that can be performed using only a multimeter.

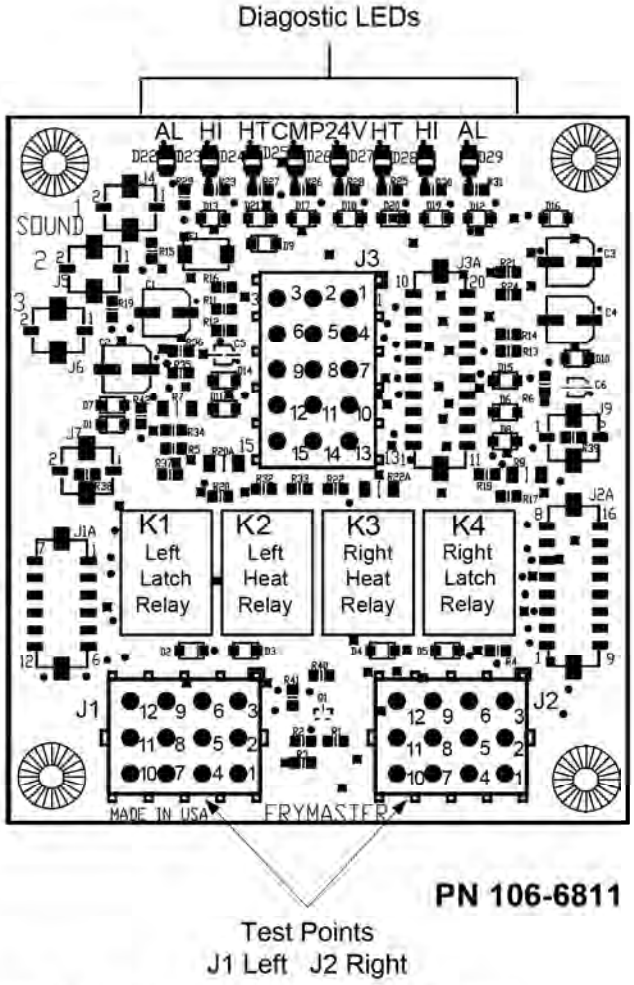

Diagnostic LED Legend

CMP	indicates power from 12V transformer
24	indicates power from 24V transformer
HI	(RH) indicates output (closed) from right latch relay
HI	(LH) indicates output (closed) from left latch relay
HT	(RH) indicates output from right heat relay
HT	(LH) indicates output from left heat relay
AL	(RH) indicates output (open) from right latch relay
AL	(LH) indicates output (open) from left latch relay

NOTE – When testing the test points on J1 and J2 test use the illustration above disregarding any silkscreened numbers on the board depicting the location of Pin 1. Pin 1 is located in the bottom right corner of Both J1 and J2. These test points are ONLY for RE Series boards with J1 and J2 plugs on the front of the board.

Meter Setting	Test	Pin	Pin	Results
12 VAC Power	50 VAC Scale	3 of J2	1 of J2	12-16 VAC
24 VAC Power	50 VAC Scale	2 of J2	Chassis	24-30 VAC
*Probe Resistance (RH)	R X 1000 OHMS	11 of J2	10 of J2	See Chart
*Probe Resistance (LH)	R X 1000 OHMS	1 of J1	2 of J1	See Chart
High-Limit Continuity (RH)	R X 1 OHMS	9 of J2	6 of J2	0 - OHMS
High-Limit Continuity (LH)	R X 1 OHMS	6 of J1	9 of J1	0 - OHMS
Latch Contactor Coil (RH)	R X 1 OHMS	8 of J2	Chassis	3-10 OHMS
Latch Contactor Coil (LH)	R X 1 OHMS	5 of J1	Chassis	3-10 OHMS
Heat Contactor Coil (RH)	R X 1 OHMS	7 of J2	Chassis	18-25 OHMS
Heat Contactor Coil (LH)	R X 1 OHMS	4 of J1	Chassis	18-25 OHMS

*** Disconnect 15-Pin harness from the computer/controller before testing the probe circuit.**

7.11 Probe Resistance Chart

Probe Resistance Chart

For use with fryers manufactured with Minco Thermistor probes only.

F	OHMS	C	F	OHMS	C	F	OHMS	C	F	OHMS	C	F	OHMS	C
60	1059	16	130	1204	54	200	1350	93	270	1493	132	340	1634	171
65	1070	18	135	1216	57	205	1361	96	275	1503	135	345	1644	174
70	1080	21	140	1226	60	210	1371	99	280	1514	138	350	1654	177
75	1091	24	145	1237	63	215	1381	102	285	1524	141	355	1664	179
80	1101	27	150	1247	66	220	1391	104	290	1534	143	360	1674	182
85	1112	29	155	1258	68	225	1402	107	295	1544	146	365	1684	185
90	1122	32	160	1268	71	230	1412	110	300	1554	149	370	1694	188
95	1133	35	165	1278	74	235	1422	113	305	1564	152	375	1704	191
100	1143	38	170	1289	77	240	1432	116	310	1574	154	380	1714	193
105	1154	41	175	1299	79	245	1442	118	315	1584	157	385	1724	196
110	1164	43	180	1309	82	250	1453	121	320	1594	160	390	1734	199
115	1174	46	185	1320	85	255	1463	124	325	1604	163	395	1744	202
120	1185	49	190	1330	88	260	1473	127	330	1614	166	400	1754	204
125	1195	52	195	1340	91	265	1483	129	335	1624	168	405	1764	207

7.12 Wiring Diagram, System

H14SC/H17SC/H22SC kW Single Fryers and FPH17SC kW Filter System Fryers 440-480V, 60 Hz, 3-Ø, 3-Wire Configurations

Refer to page 2-2 for power requirements.

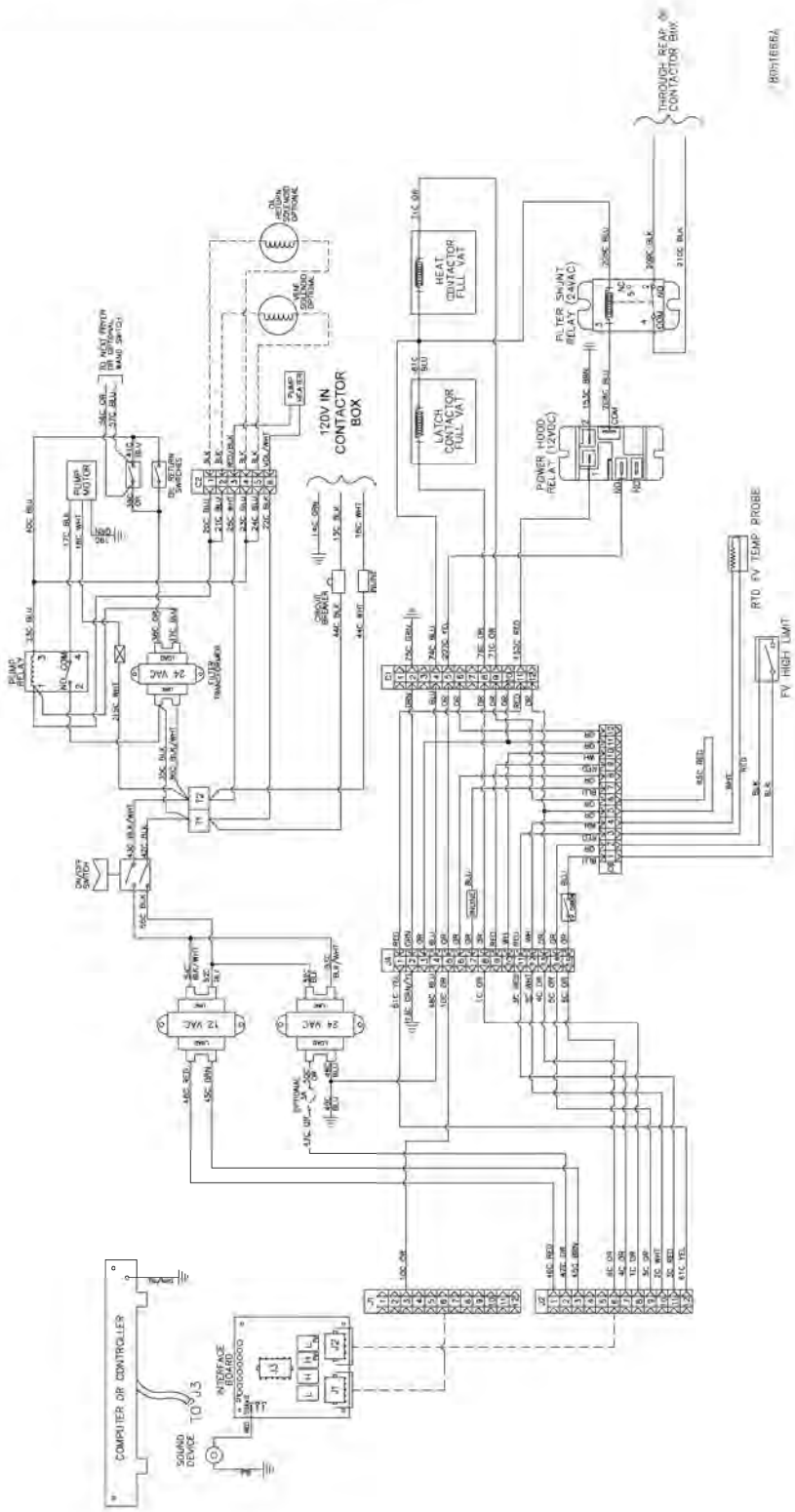

7.13 Wiring Diagram, Contactor Box

H14SC/H17SC/H22SC kW Single Fryers and FPH17SC kW Filter System Fryers 440-480V, 60 Hz, 3-Ø, 3-Wire Configurations

Refer to page 2-2 for power requirements.

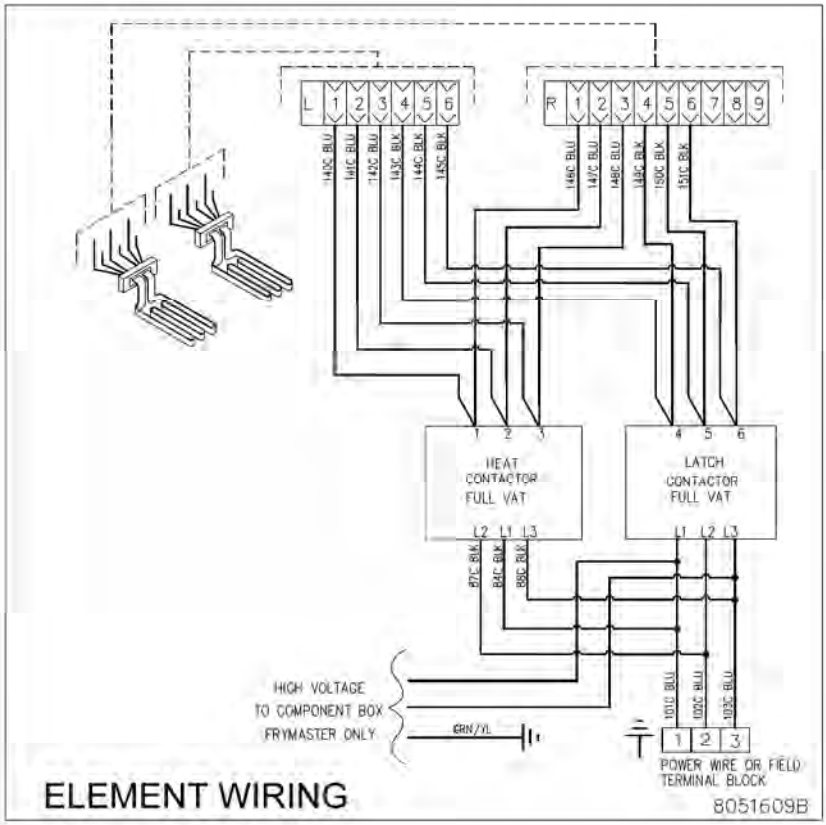

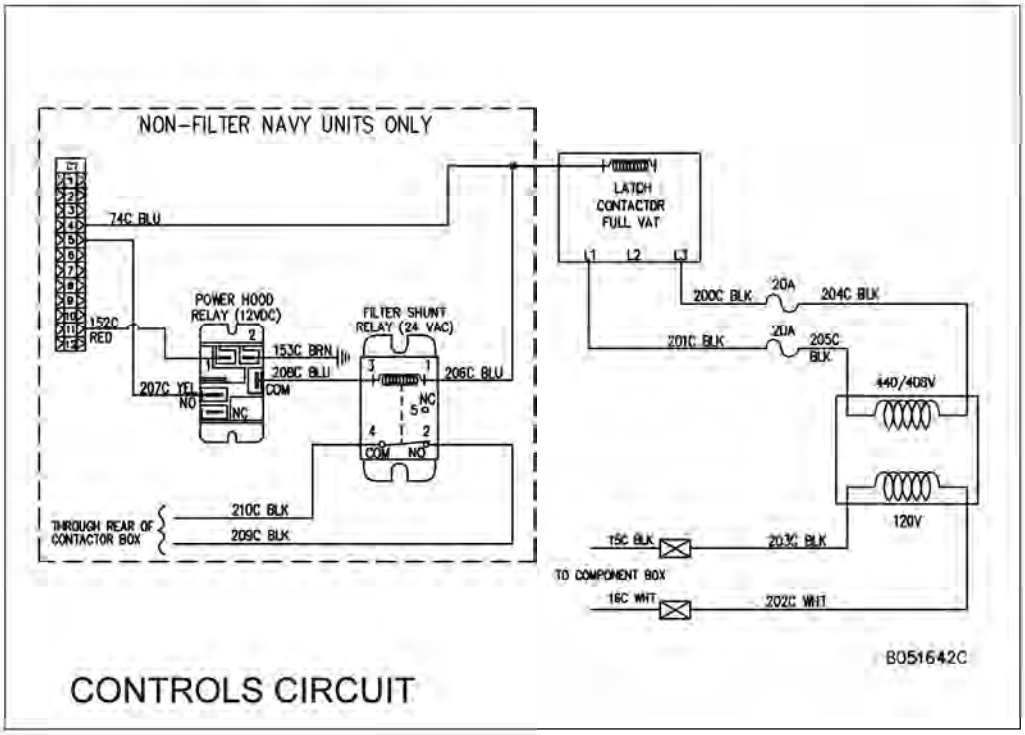

7.13 Wiring Diagram, Contactor Box cont.

H14SC/H17SC/H22SC kW Single Fryers and FPH17SC kW Filter System Fryers 440-480V, 60 Hz, 3-Ø, 3-Wire Configurations

Refer to page 2-2 for power requirements.

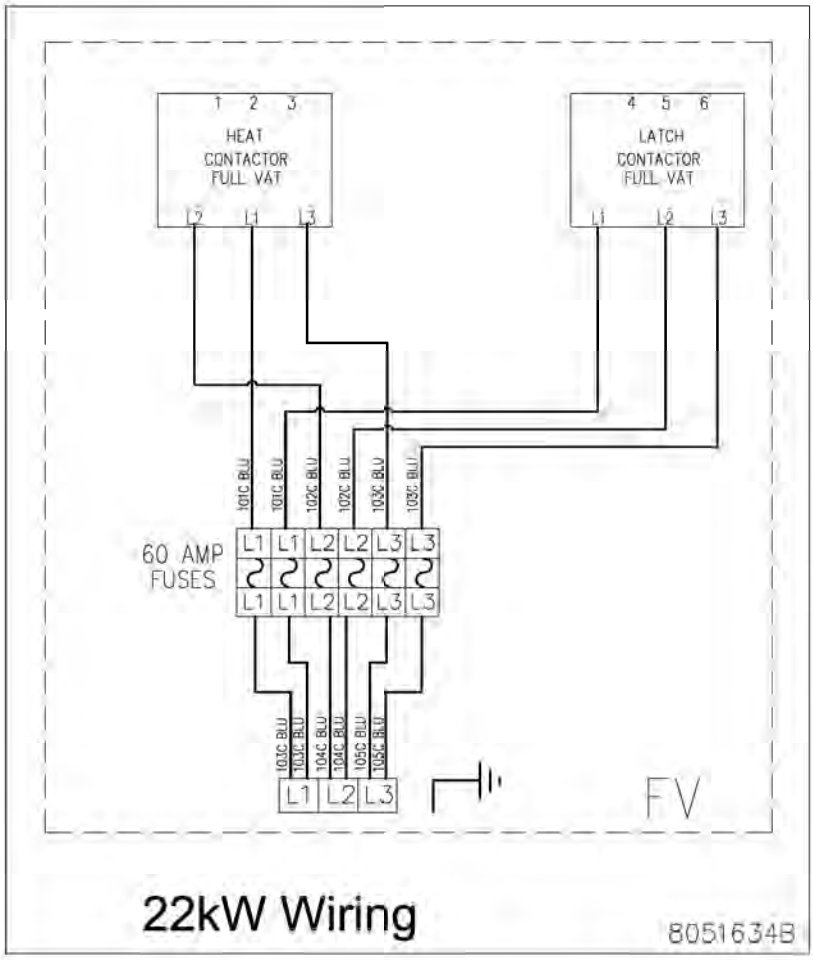

7.14 Wiring Diagram, Wiring Harness

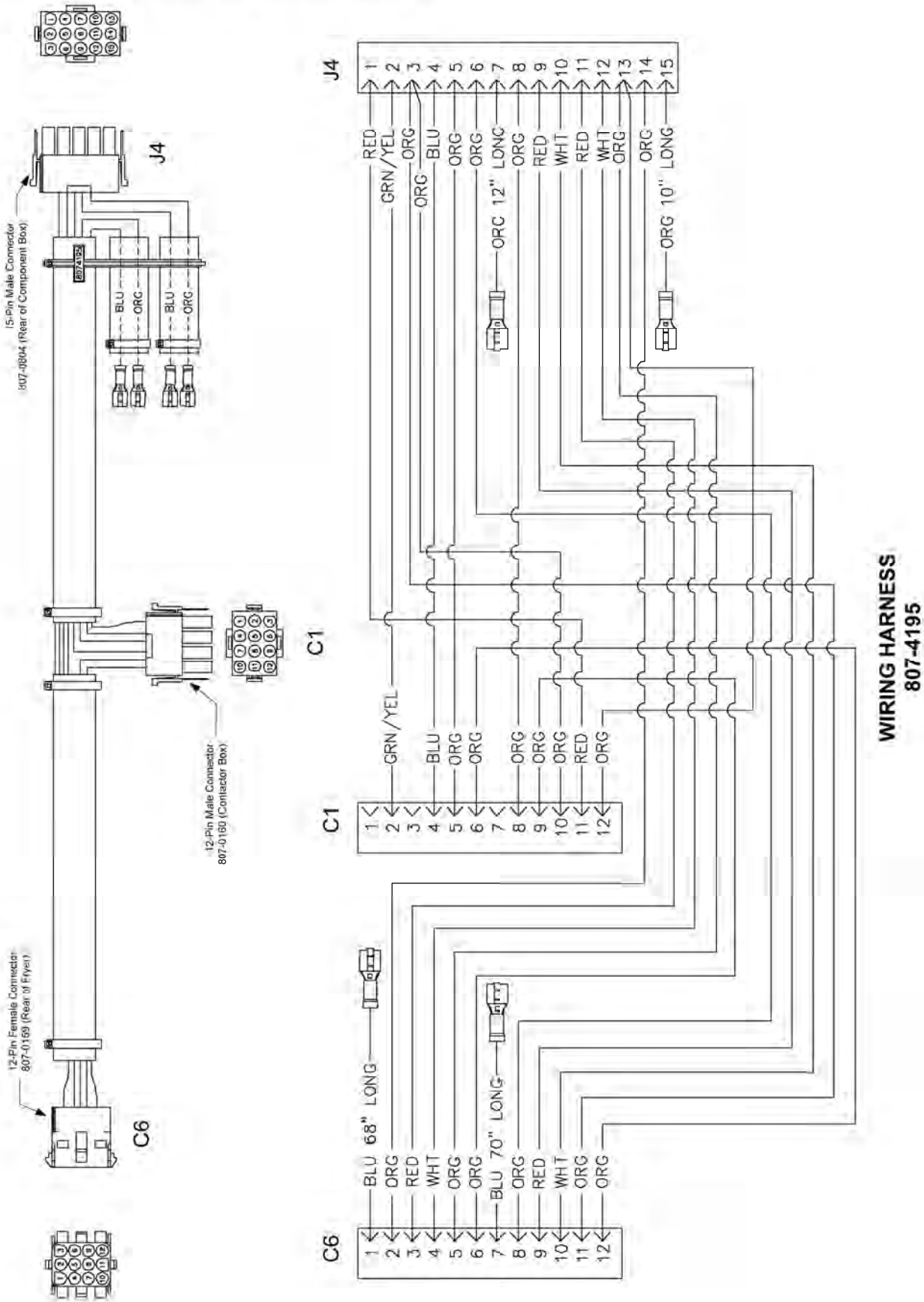

7.15 Components Description of Operation

A.	**Drain solenoid -**	When the return valve is opened, a microswitch activates and supplies 24V to the pump relay and solenoids.
B.	**Vacuum release solenoid -**	When the return valve is closed, it de-energizes the 24V to the pump relay and solenoids releasing the vacuum.
C.	**Full-vat oil return switch -**	When the return valve is open, the 24V circuit is closed and it activates the pump relay and drain solenoid.
D.	**Dual-vat oil return switch -**	When the return valve is open, the 24V circuit is closed and it activates the pump relay and drain solenoid.
E.	**Optional waste oil pump switch -**	The drain valves and oil return valves are closed. When the oil waste discharge valve is opened, the 24V circuit is closed, it activates the pump relay and drain solenoid.
F.	**Safety interlock switch -**	The interlock switch is in series with the high-limit. It is actuated when the drain valve opens, which opens the latch circuit which drops out the 12V circuit on the interface board. This removes power from the latching contactor which opens and de-energizes the heating elements.

NAVY SURFACE SHIP ELECTRIC FRYERS
CHAPTER 8: PARTS LIST

8.1 Accessories

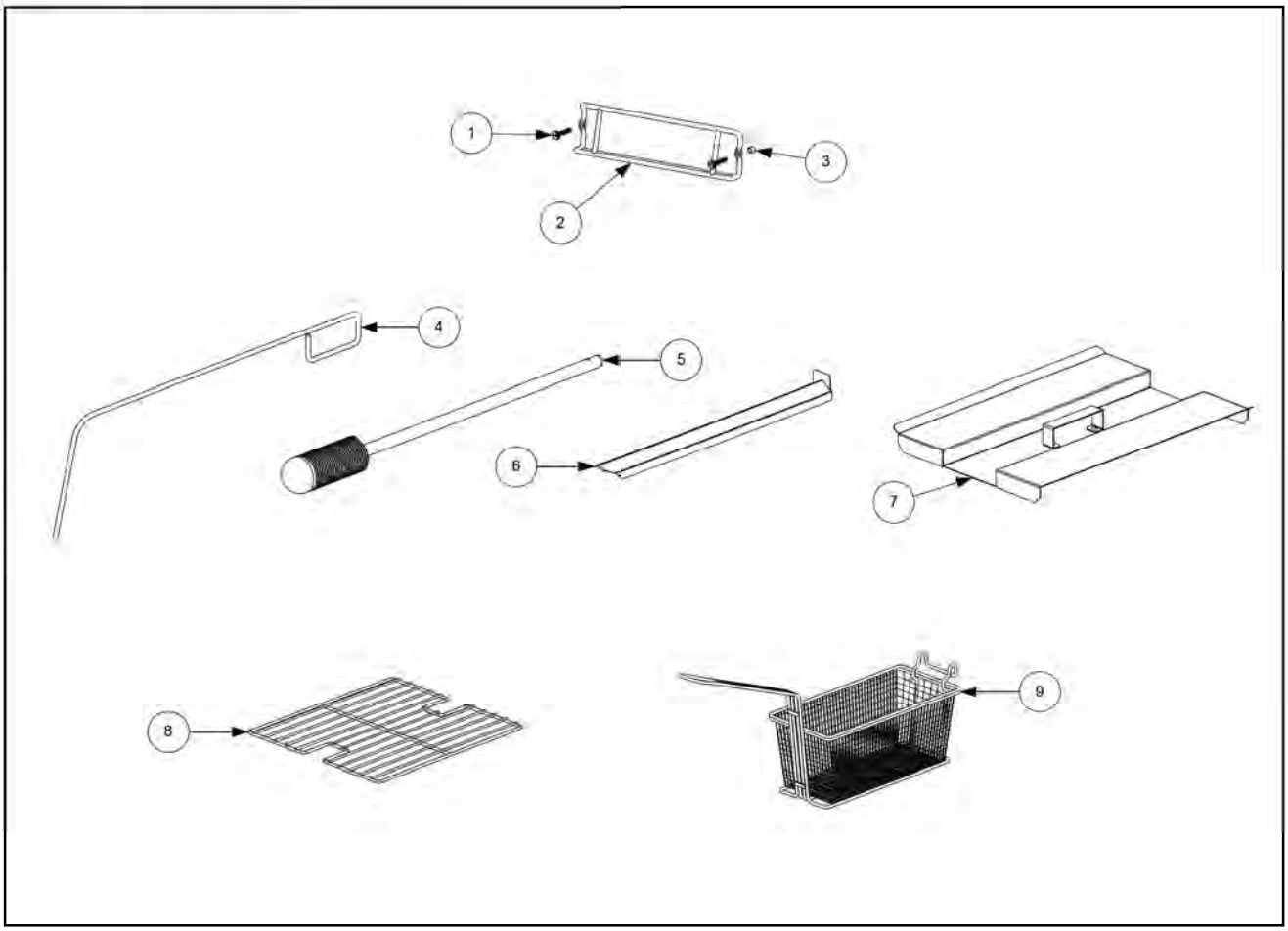

ITEM	PART #	COMPONENT
1	809-0171	Thumbscrew, ¼ -20 X 1⅜-inch
2	810-2793	Hanger, Wireform Basket
3	809-0921	Spacer, Basket Hanger
4	803-0197	Cleanout Rod, 27-inch
5	803-0209	Brush, Frypot
6	823-6009	Connecting Strip, Frypot
7	806-4041	Cover, Full-Vat Frypot
8	803-0132	Rack, Full-Vat Basket Support
9	803-0271	Basket, Twin
*	812-1226SP	Drain Nipple 1¼-inch Painted
*	823-2109	Drain Pan, Military
*	803-0002	Powder, Filter (80-8oz. Applications)
*	803-0170	Paper, Filter (100-Sheet Pack)

* Not illustrated.

8.2 Cabinetry

8.2.1 Backs, Control Panels, Doors, Handles, Sides, Tilt Housings & Top Caps

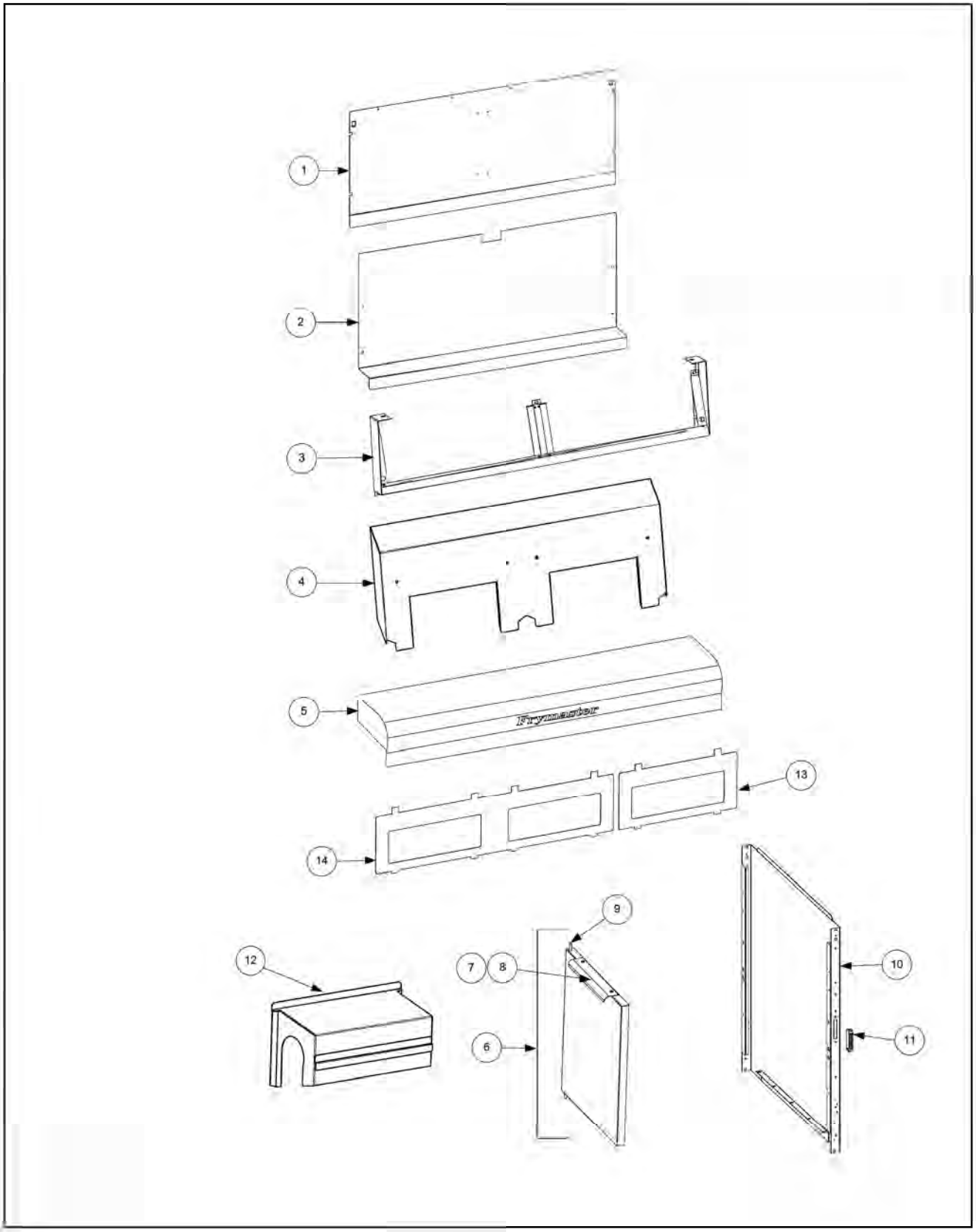

8.2.1 Backs, Control Panels, Doors, Handles, Sides, Tilt Housings & Top Caps (cont.)

ITEM	PART #	COMPONENT
1	230-0675	Back Panel, Upper - Single
	230-0676	Two Station Fryer
	230-0677	Three Station Fryer
	230-0546	Four Station Fryer
2	230-0672	Back Panel, Center - Single
	230-0673	Two Station Fryer
	230-0674	Three Station Fryer
	230-0500	Four Station Fryer
3	106-5016	Frame, Control Panel - Single
	106-5221	Two Station Fryer
	106-5018	Three Station Fryer
	106-7533	Four Station Fryer
4	823-5567	Tilt Housing - Single
	823-5484	Two Station Fryer
	824-5493	Three Station Fryer
	823-6054	Four Station Fryer
5	106-5195	Top Cap - Single
	106-5196	Two Station Fryer
	106-5197	Three Station Fryer
	106-7531	Four Station Fryer
*	200-9614	Heat Shield - Single
	200-9610	Two/Four Station Fryer
	200-9611	Three Station Fryer
6	106-4979	Door Assembly - Single (includes items below plus 210-9214)
*	824-1516	Door, Universal Single
*	210-9215	Liner, Door Universal Single
*	809-0500	Screw, #10 – ½ Hex TR HD SS
*	826-1343	Spring, Door Pin Hinge (Pkg. of 10)
*	210-9188	Hinge, Door Single
*	106-4769	Door, Left or Right (Left shown – move handle to opposite side for Right) ***Two and Three Station Fryers***
7	809-0266	Screw, #10 X ½-inch Phillips Truss Head
8	210-9214	Handle, Door
9	106-0554	Pin Assembly, Door
*	826-1343	Spring, Door Pin Hinge (Pkg. of 10)
10	231-1558	Side, Cabinet Left, Single
	231-0326	Two or Three Station
	232-1558	Side, Cabinet Right, Single
	232-0326	Two or Three Station
11	810-1105	Magnet, Door
*	809-0123	Screw, #10 –3/4 Truss Slotted Head
*	826-1376	Nut KEPS 10-32 HX ZP (Pkg. of 10)
*	809-0970	Retaining Ring – Door Hinge Pin
*		Handle (Grab Rail) – ***(For handle end use 910-0915)***
	823-0839	Single Station Fryer
	823-2908	Two Station Fryer
	823-4585	Three Station Fryer
	823-6049	Four Station Fryer
12	823-5440	Cove, Element Tilt Housing
13	230-2191	Bezel, One-Controller
14	230-2097	Bezel, Two/Four-Controller
	230-2193	Bezel, Three-Controller

*Not illustrated.

8.2.2 Cabinets, Bases, Braces, and Associated Parts

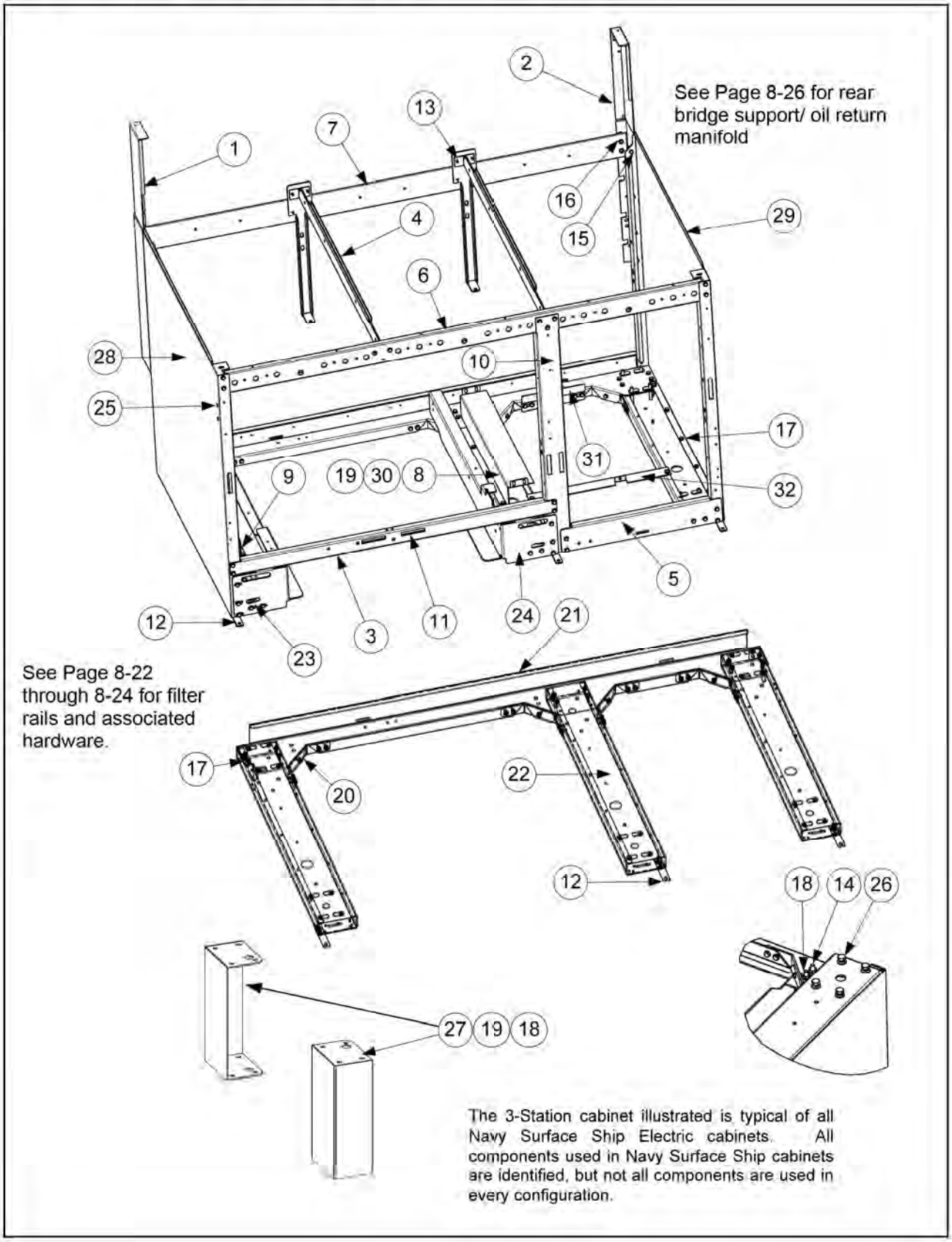

8.2.2 Cabinet Bases, Braces, and Associated Parts (cont.)

ITEM	PART #	COMPONENT
1	106-3828	Upright Assembly, Left
2	106-3829	Upright Assembly, Right
3	200-1651	Support, Cross Cabinet
4	200-1659	Divider, Cabinet
5	200-2293	Brace, Lower Front
6		Brace, Front Horizontal
	200-7036	Single-Station Fryer
	200-7037	Two-Station Fryer
	200-7038	Three-Station Fryer
	200-7039	Four-Station Fryer
7		Brace, Rear Horizontal
	200-5356	Single-Station Fryer
	200-2284	Two-Station Fryer
	200-2295	Three-Station Fryer
	200-2725	Four-Station Fryer
8	222-0610	Bracket, Right Hand Mounting
9	221-0610	Bracket, Left Hand Mounting
10	200-4424	Post, Door
11	810-2346	Magnet, Door
12	210-6862	Hinge, Door
13	824-1488	Bracket, Rear Support
14	826-1389	Bolt, ¼-20 X ¾-inch Hex Head (Pkg. of 10)
15	826-1330	Screw, 10-32 X ⅜-inch Slotted (Pkg. of 25, used to attach contactor box)
16	826-1376	Nut, 10-32 Keps Hex (Pkg. of 10)
17	826-1374	Screw, #10 X ½-inch Hex Washer Head (Primary cabinet screw) Qty 25
18	809-0417	Nut, ¼-20 Hex Flange (used with item #22)
19	809-0429	Bolt, ¼-20 X 2-inch Hex Head
20	200-5417	Brace, Rear Channel Corner
21		Channel, Base Rear
	823-5589	Single-Station Fryer ***(106-4901 Single Base Non-Filter Assembly)***
	823-4558	Two-Station Fryer ***(106-2744 - Double Base Assembly)***
	823-4560	Three-Station Fryer ***(106-2745 - Triple Base Assembly)***
	823-4561	Four-Station Fryer ***(106-2746 - Quad Base Assembly***
22	824-1131	Channel, Base Side
23	200-4408	Support, Left Filter Pan
24	200-4409	Support, Right Filter Pan)
25	809-0079	Nutsert, ¼" - 20
26	809-0191	Washer, ¼" Lockspring
27	823-4386	Leg, Navy Shipboard (Mounts with Items 18 and 19)
28	231-0349	Side, LH Cabinet
29	232-0349	Side, RH Cabinet
30	809-0190	Washer, Flat 0.625"x 0.275"x 40 SS
31	220-1095	Support, Rear Contactor Box ***(use 220-1192 for Singles)***
32	220-1093	Support, Front Contactor Box ***(use 220-1193 for Singles)***
*	823-4584	Bar, Filter Pan Lock

* Not illustrated.

8.3 Drain System Components

8.3.1 Drain Tube Sections and Associated Parts

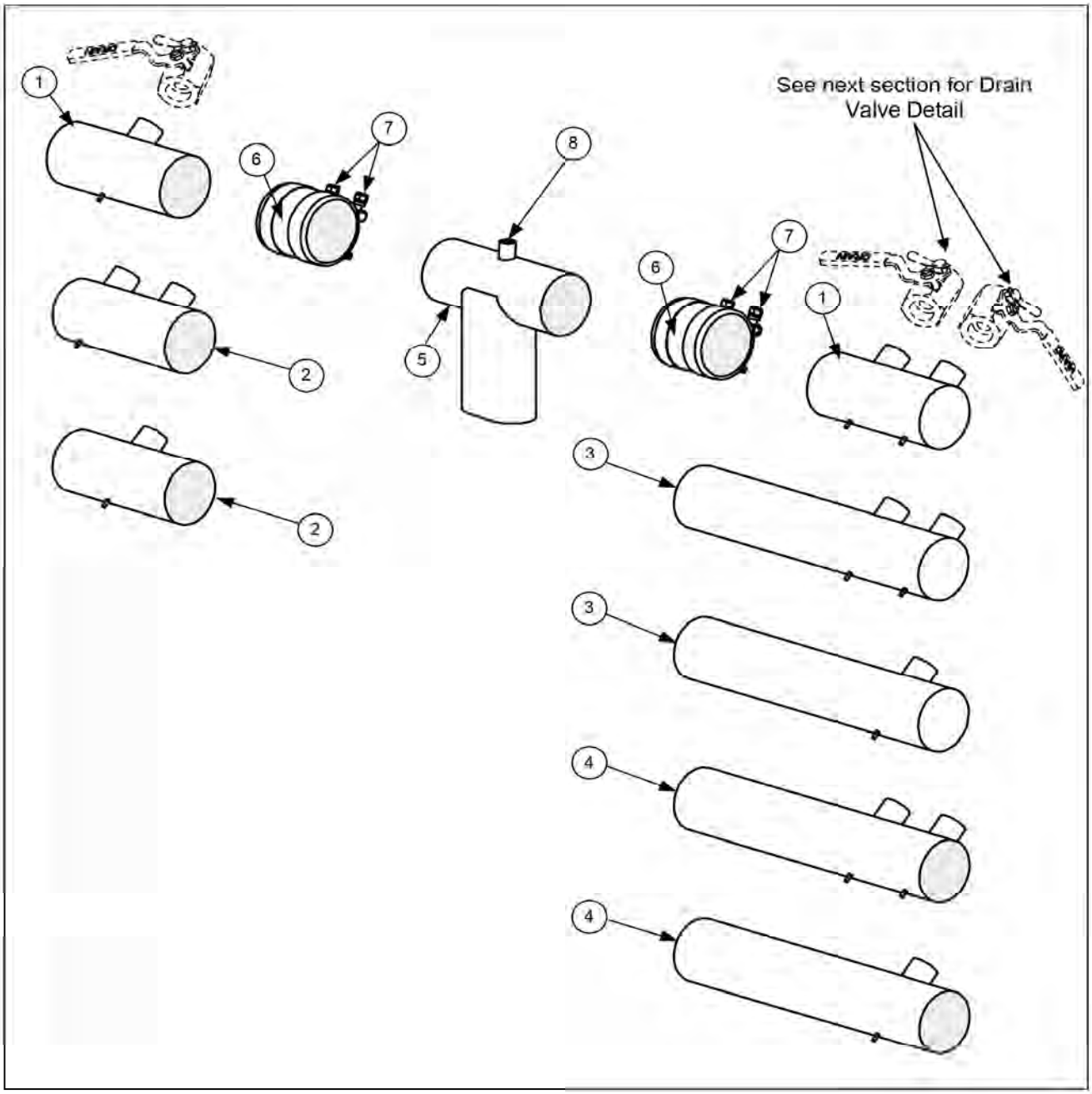

8.3.1 Drain Tube Section and Associated Parts (cont.)

ITEM	PART#	COMPONENT
1		Drain Tube, Left/Right End Short
	823-4625	Full-Vat 3"
	823-4624	Dual-Vat 3"
2		Drain Tube, Left/Right Open Short
	823-4643	Full-Vat 3"
	823-4642	Dual-Vat 3"
3		Drain Tube, Right End Long
	823-4639	Full-Vat 3"
	823-4638	Dual-Vat 3"
4		Drain Tube, Left/Right Open Long
	823-4641	Full-Vat 3"
	823-4640	Dual-Vat 3"
5	823-4892	Drain Outlet Center Dump
6	816-0625	Sleeve 3"
7	809-0969	Clamp, 3" T-Bolt
8	810-2492	Fitting, Quick-Connect Straight (receives Teflon vent tube)
*	KIT6033	Kit, Round Drain Clamp (2 or Item 7 and 1 of Item 6)
*	811-1071	Tube, Teflon Vent ¼-inch OD (sold by the foot)

* Not illustrated.

8.3.2 Drain Valve Assembly and Assoc. Parts (Units with Built-In Filtration)

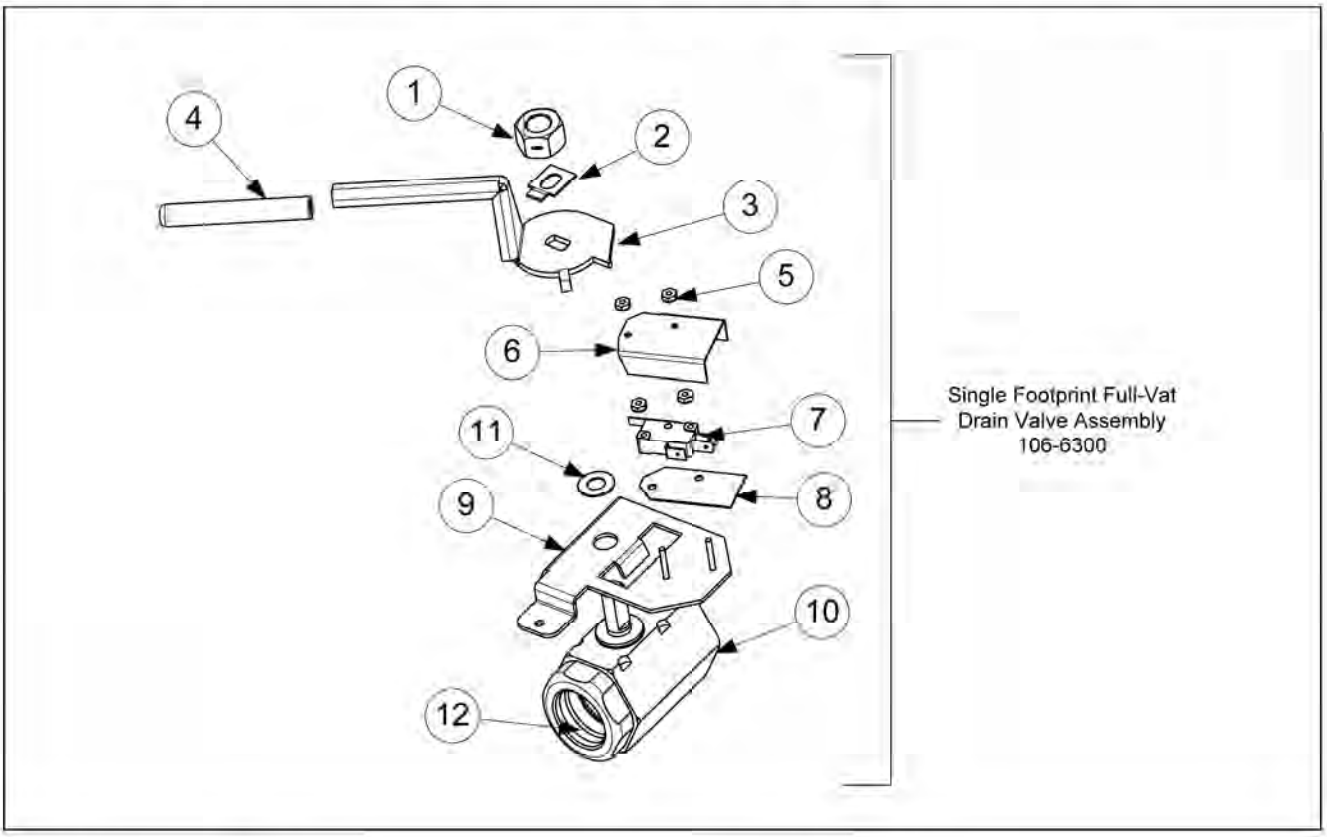

ITEM	PART #	COMPONENT
1	809-0540	Nut, ½-13 2-Way Hex Lock
2	900-2936	Retainer, Full-Vat Nut Drain Valve
3	824-1602	Handle, Full-Vat Drain Valve
4	816-0639	Cap, Red Handle
5	809-0237	Nut, 4-40 Keps Hex
6	901-2348	Cover, Dual Vat Drain Safety Switch
7	807-2103	Microswitch, CE Straight Lever
8	816-0220	Insulation, Drain Safety Switch
9	806-8137SP	Bracket Assembly, Full-Vat Drain Safety Switch
	106-5391	Bracket Assembly, Full-Vat Drain Safety Switch Single Footprint Only
10	810-1018	Valve, 1.25-inch Full-Vat Drain Single Footprint Only
11	810-1165	Washer, Teflon
12	816-0135PK	O-Ring, Round Drain (Qty. 4)

8.3.2 Drain Valve Assembly and Assoc. Parts cont. (Units with Built-In Filtration)

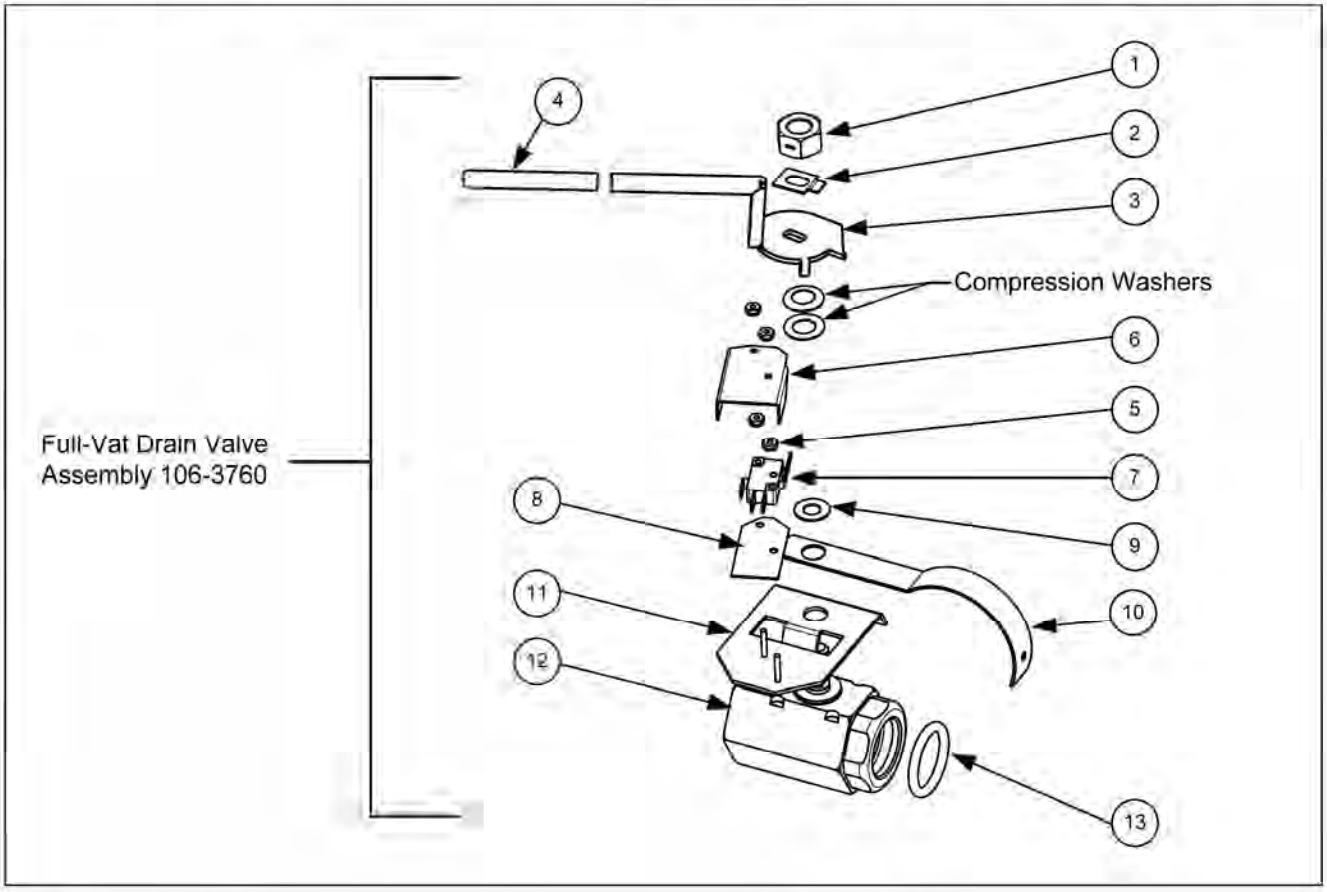

ITEM	PART#	COMPONENT
1	809-0540	Nut, ½-13 2-Way Hex Lock
2	900-2936	Retainer, Full-Vat Drain Valve Nut
3	824-1602	Handle, Full-Vat Drain Valve
4	816-0639	Cap, Red Handle
5	809-0237	Nut, 4-40 Keps Hex
6	901-2348	Cover, Dual Vat Drain Safety Switch
7	807-2103	Microswitch, CE Straight Lever
8	816-0220	Insulation, Drain Safety Switch
9	810-1165	Washer, Teflon Drain Valve
10	200-6496	Support, 3" Drain
11	806-8137	Bracket Assembly, Full-Vat Drain Safety Switch
12	810-1018	Valve, 1.25-inch Full-Vat Drain
13	816-0135PK	Round Drain O-Ring (Qty. 4)

8.3.2 Drain Valve Assembly and Assoc. Parts cont. (Units with Built-In Filtration)

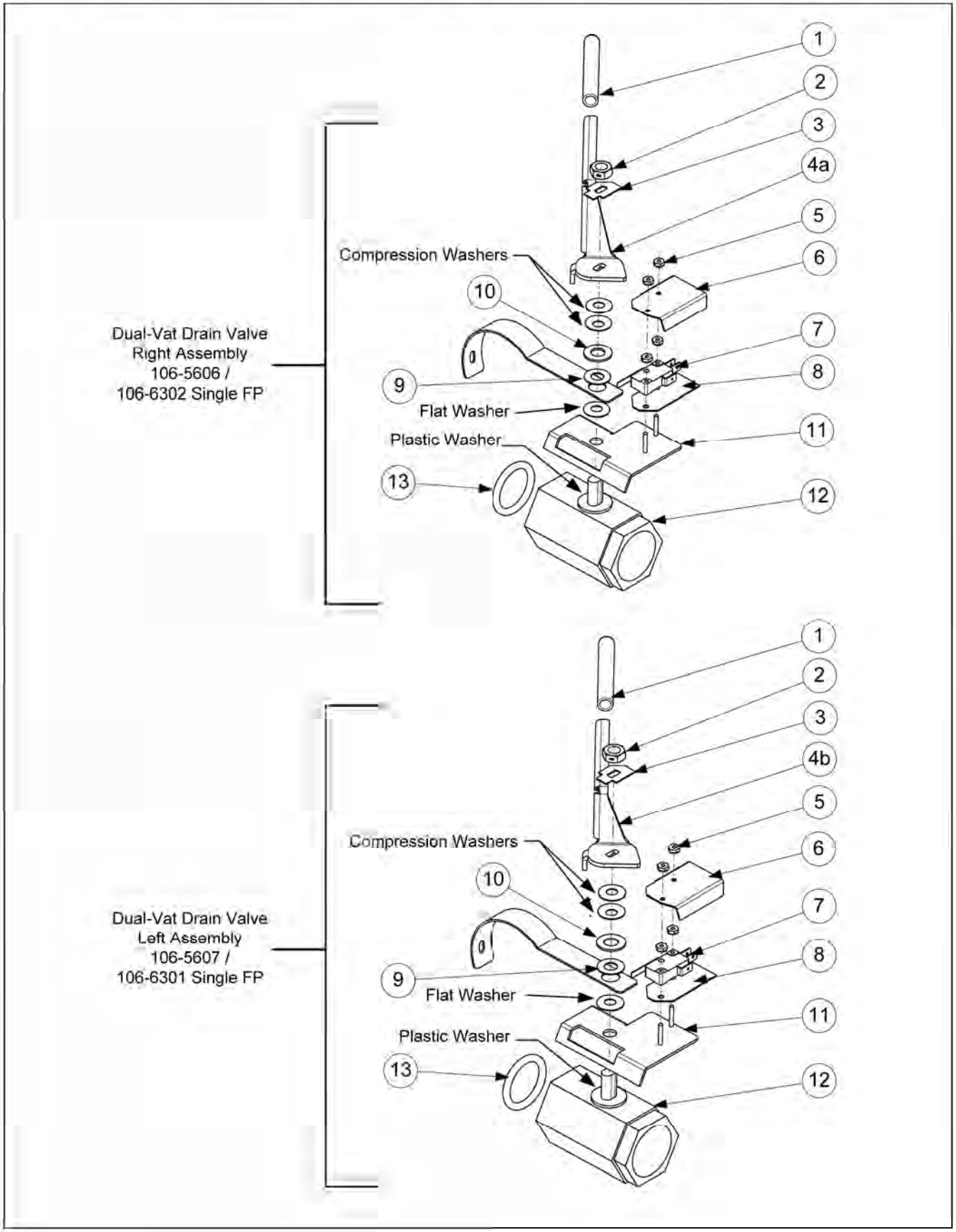

8.3.2 Drain Valve Assembly and Assoc. Parts cont. (Units with Built-In Filtration)

ITEM	PART#	COMPONENT
1	816-0639	Cap, Drain Handle
2	809-0539	Nut, ⅜-16 2-Way Hex Lock
3	900-2934	Retainer, Dual-Vat Drain Valve Nut
4a	824-1636	Handle, Dual-Vat Right Drain Valve
4b	824-1637	Handle, Dual-Vat Left Drain Valve
5	809-0237	Nut, 4-40 Keps Hex
6	901-2348	Cover, Dual Vat Drain Safety Switch
7	807-2103	Microswitch, CE Straight Lever
8	816-0220	Insulation, Drain Safety Switch
9	810-1165	Washer, Teflon Drain Valve
10	809-0196	Washer, ⅜-inch Flat
11	106-2671	Bracket Assembly, Dual-Vat Drain Safety Switch
	106-6304	Bracket Assembly, Dual-Vat Drain Safety Switch Single Footprint Only
12	810-1114	Valve, 1-inch Dual-Vat Drain
13	816-0135PK	Round Drain O-Ring (Qty 4)
*	823-5592	Tube, Drain Single-Station Only with Filter

* Not illustrated.

8.3.3 Drain Valves and Associated Parts (Units without Built-In Filtration)

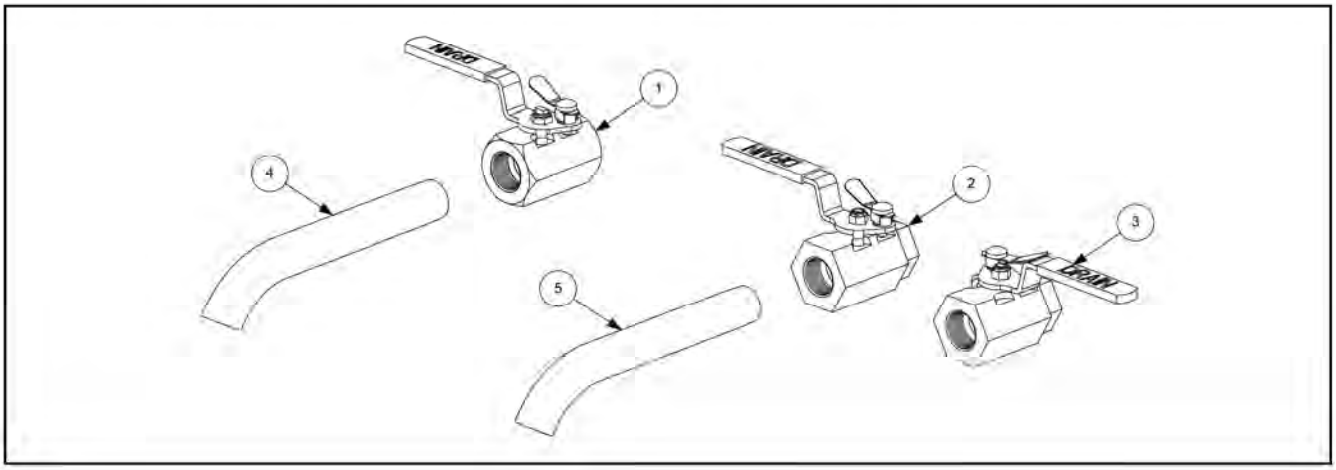

ITEM	PART #	COMPONENT
1	810-1569	Valve, 1.25-inch Non-Filter Full-Vat Drain
2	806-7915SP	Valve, 1-inch Non-Filter Dual-Vat Left Drain
3	806-7916SP	Valve, 1-inch Non-Filter Dual-Vat Right Drain
4	812-1226	Drain Extension, 1.25-inch
5	812-1227	Drain Extension, 1-inch

8.4 Electronics and Wiring Components
8.4.1 Component Boxes

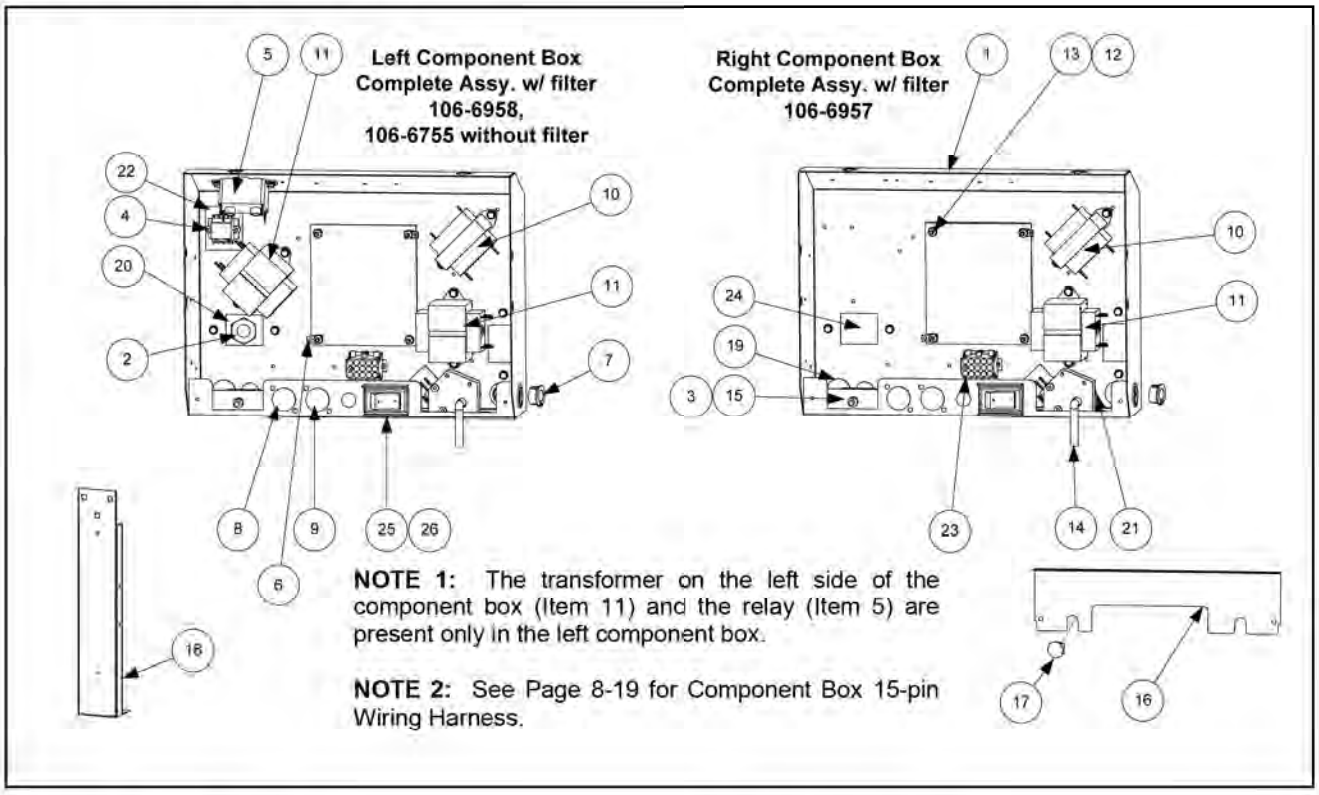

ITEM	PART #	COMPONENT
1	106-5846	Box Assembly, Component
2	210-9002	Bracket, Component Box Strain Relief
3	230-1057	Bracket, Circuit Breaker
4	806-9495SP	Terminal Block and Wire Assembly
5	807-0012	Relay, Filter 18 Amp ⅓ HP 24V Coil
6	826-1337	Terminal, ¼-inch Push-on (Pkg. of 5)
7	810-0045	Bushing, .875 Dia. Hole 11/16"
8	807-1947	Plug, .875
9	810-2446	Plug, .50 Heyco Double "D"
10	807-0855	Transformer, 100-120V/12V 20VA
11	807-0800	Transformer, 100-120V/24V 50VA
*	807-3892	Transformer, 440/480 12/24V (Used in non-filter fryers)
12	809-0349	Spacer, 4mm X 6mm Aluminum
13	106-6811	Interface Board ***(on SMT boards the Relays are not replaceable)***
	807-3932	Relay, Heat/Latch 12VDC SPDT 12 Amp Sealed ***(on SMT boards the Relays are not replaceable)***
*	807-4330	Sound Device Adaptor Harness
*	806-7179SP	Sound Device ***(use 810-3141 for SMT Sound Device)***
14	106-5848	Handle Assembly, Oil Flush FV
15	807-0069	Circuit Breaker, 10 Amp
16	210-9118	Guard, Finger
17	810-2445	Plug, Button .625 Heyco Double "D"

* Not illustrated.

Continued on the following page.

8.4.1 Component Boxes cont.

ITEM	PART#	COMPONENT
18	210-8995	Brace, Component Box
19	807-1083	Bushing, Heyco
20	807-3868	Strain Relief
21	807-0121	Bushing, Heyco SB-625-500
22	816-0217	Paper, Insulating Terminal Block CE
23	106-5750	Harness, Full Vat Assembly
24	220-0083	Plate, Strain Relief
25	807-4036	Switch
	807-3575	Plug, Carling Switch Hole *(used in place of a switch on some models)*
26	230-0834	Guard, RE Box Switch

* Not illustrated.

8.4.2 Contactor Boxes

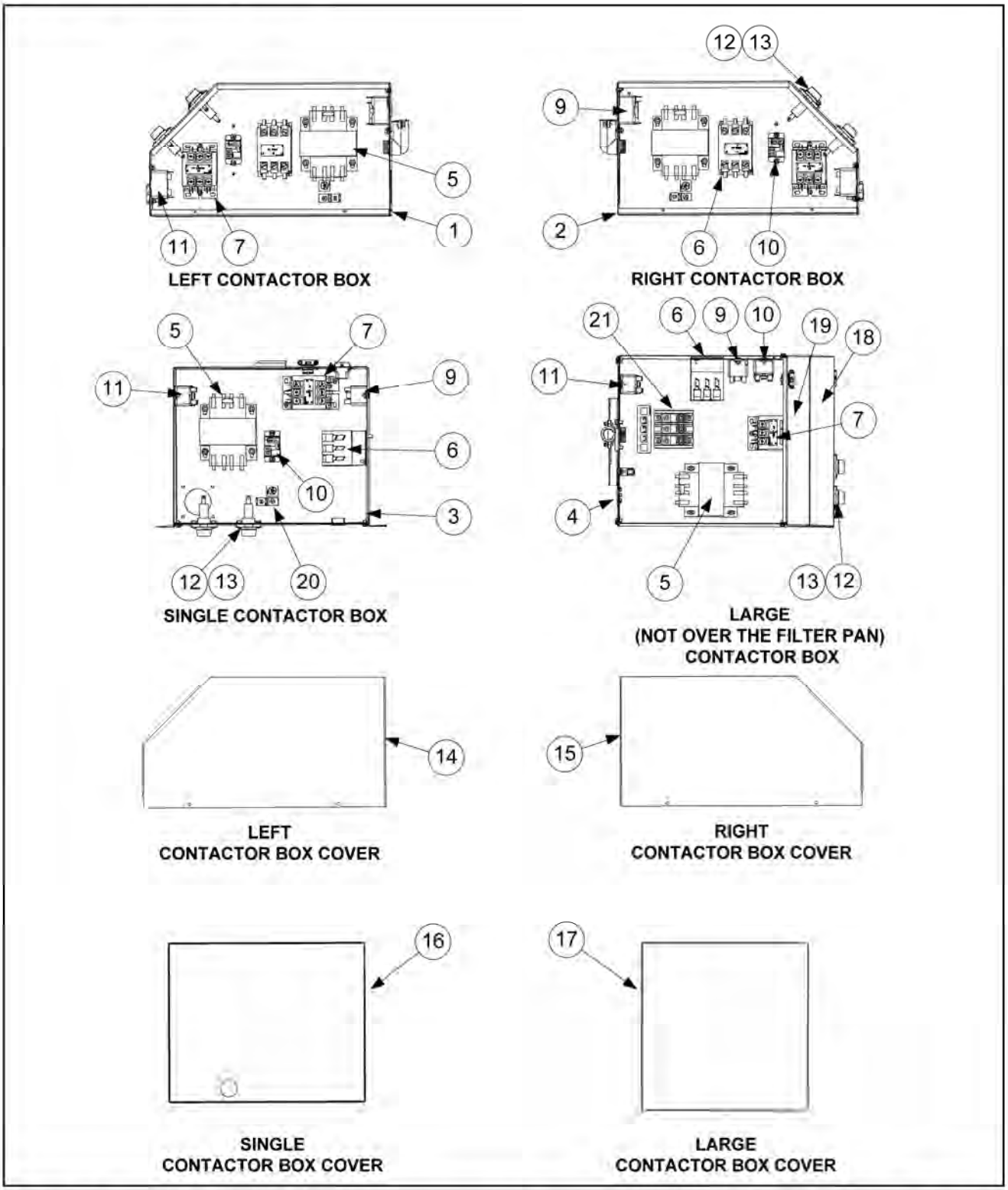

NOTE 1: Left and right contactor box assemblies are mirror images of one another. With the exception of the box itself, all components of a left-hand assembly, are the same as those in the corresponding right-hand assembly and vice versa.

NOTE 2: See Page 8-18 and 8-19 for Contactor Box Wiring Assembly

8.4.2 Contactor Boxes cont.

ITEM	PART #	COMPONENT
	106-6278	Assembly, Contactor Box Left
	106-6279	Assembly, Contactor Box Right
	106-6292	Assembly, Contactor Box Single
	106-6268	Assembly, Contactor Box Large (Not over the filter-pan box)
1	106-6124	Box, Left Contactor
2	106-6125	Box, Right Contactor
3	106-6288	Box, Single Footprint Contactor
4	106-6255	Box, Large Contactor (Not over the filter-pan box)
5	807-0031	Transformer, 250VA
	807-0064	Transformer, 480V/120V 150 VA ***(used in fryers with filtrations systems only)***
6	807-2284	Contactor, 24V 50 Amp Mechanical ***(used in 14 & 17kW units only)***
7	810-1202	Contactor, 24V 40 Amp Mechanical
8	807-2283	Contactor, 24V 63 Amp Mechanical ***(used in 22kW units only)***
9	807-2434	Relay, Shunt 24V Coil Amp
10	807-1683	Relay, Power 12 VDC
11	807-0012	Relay, Tilt 18 Amp HP 24 V Coil
12	807-0922	Holder, Bus Fuse
13	807-2278	Fuse, 20 Amp
14	231-1135	Cover, Left Hand
15	232-1135	Cover, Right Hand
16	230-1377	Cover, Single Foot Print
17	220-1089	Cover, Large Top
18	220-1088	Cover, Contactor Box Front
19	220-1087	Bracket, Box Connecting
20	807-0070	Terminal, Ground Lug
21	807-3970	Block, Terminal 3 pole 600V 175A ***(used in 22kW only)***
*	231-0811	Bracket, Left Hand Contactor Box Mounting
*	WIR0751	Wire Assembly, Filter Shunt Relay
*	WIR0726	Wire Assembly, Hood Relay
*	WIR0712	Wire Assembly, Latch/Heat Jumpers
*	232-0811	Bracket, Right Hand Contactor Box Mounting

*Not illustrated.

8.4.3 Heating Element Assembly and Associated Parts

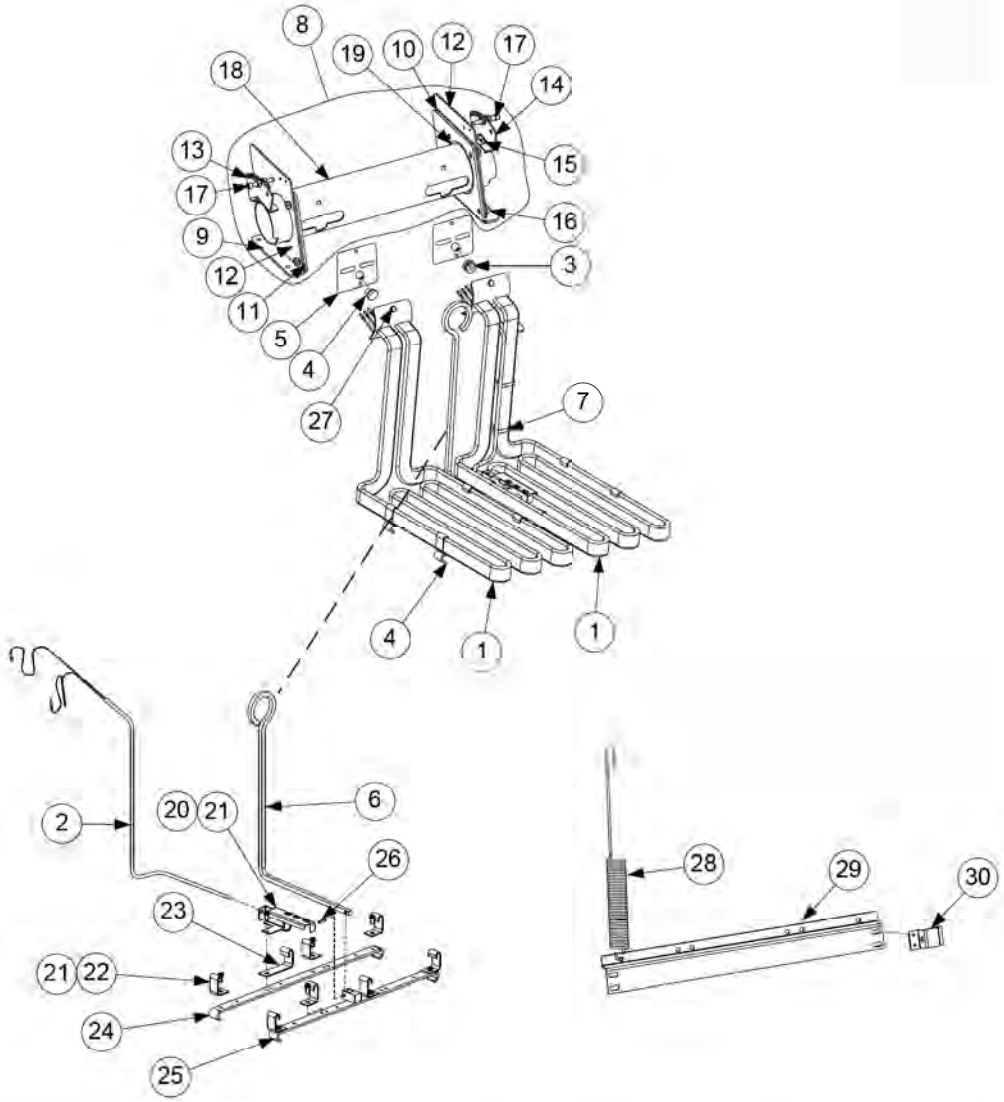

NOTES:
The only difference between element assemblies for different voltage and kW ratings is the element itself (Item 1).

Items 28, 29 and 30 are shown as associated parts. They are not part of either assembly.

This manual references only the new "RE" element. For previous model fryers and related parts prior to May 2006 see manual 819-5184.

8.4.3 Heating Element Assembly and Associated Parts (cont.)

ITEM	PART #	COMPONENT
1		Element Kits – *includes gaskets, grommets, tie wraps, screws and nuts.*
	826-2195	440V 7.0 kW
	826-2202	440V 8.5 kW
	826-2211	440V 11.0 kW
	826-2196	480V 7.0 kW
	826-2203	480V 8.5 kW
	826-2209	480V 11.0 kW
2	826-2212	Probe, Temperature Kit (includes tie wraps and grommet)
3	816-0681	Grommet, Probe
4	816-0480	Plug, .375-inch Dome
5	816-0688	Gasket, Element
6	810-2971	Handle, Element Lift SS
7	809-0567	Tie-Wrap, Metal
8	106-5590	Tube Assembly Element, Full-Vat
9	106-5588	Bracket Assembly, LH Element Tube Support
10	106-5589	Bracket Assembly, RH Element Tube Support
11	230-0554	Plate, Element Tube Support Inner
12	230-0553	Plate, Element Tube Support Outer
13	106-6569	Bracket Assembly, LH Upper Spring
14	106-6570	Bracket Assembly, RH Upper Spring
15	826-1330	Screw, 10-32 X ⅜-inch Slotted Truss Head SS (Pkg. of 25)
16	809-0766	Nut, 10-32 Hex HD SS
17	809-1000	Screw, 10-32 x 1¼-inch Hex
18	106-6037	Tube, FV Element Mounting
19	810-2993	Bushing, Tube End Teflon
20	230-0850	Bracket, Temperature Probe
21	809-0518	Screw, 8-32 X ⅜-inch Slotted Hex Head SS
22	210-9180	Clamp, Element (Short)
23	230-0781	Clamp, Element (Long)
24	230-0849	Bracket RE, Full-Vat Element Rear
25	823-5657	Bracket RE, Full-Vat Element Front
26	826-1364	Pin, .125 X .5-inch Split (Pkg. of 25)
27	809-1003	Screw, 10-32 X ⅜-inch Hex Head SS (uses 809-0766 nut 10-32 SS)
28	810-3030	Spring, Element Lift Left
	810-3031	Spring, Element Lift Right
29	220-0464	Bracket, Lower Spring
	220-1190	Bracket, Lower Spring Single Foot Print
30	220-0733	Bracket, Lower Spring Mating
*	106-6587	Magnetic Position Sensor
*	810-3007	Magnet
*	230-0794	Bracket, Magnetic Position Sensor Wire

* Not illustrated.

8.4.4 Controller

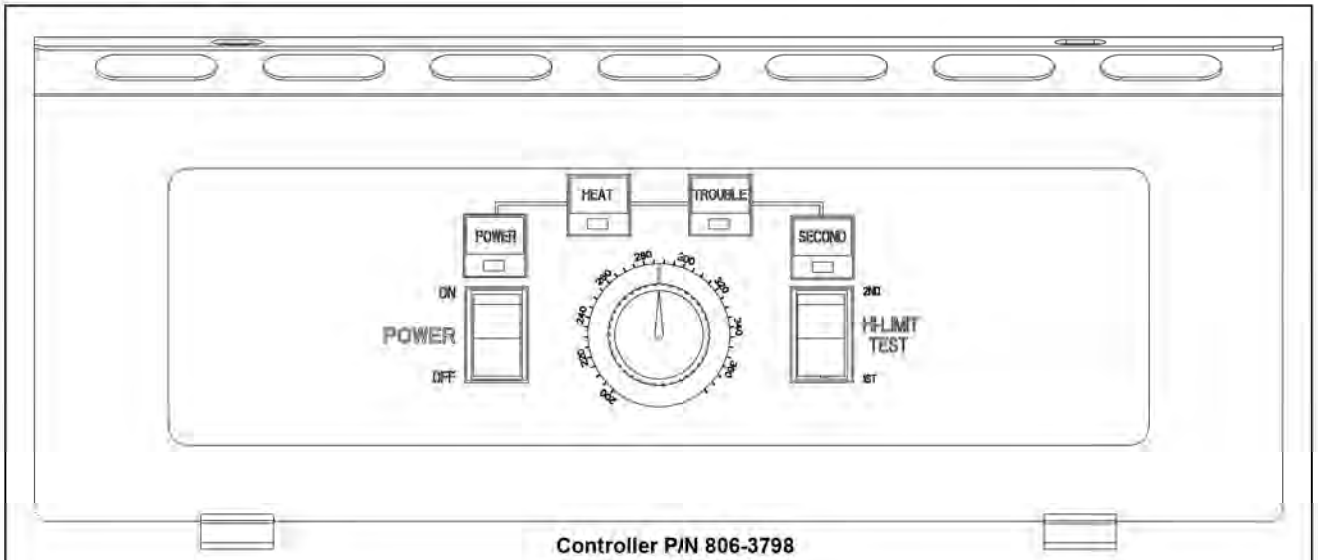

Controller P/N 806-3798
Knob P/N 810-0387
Power Switch P/N 807-0812
High-Limit Switch P/N 807-0811

8.4.5 Wiring

8.4.5.1 Contactor Box Wiring Assembly – 12-Pin Full-Vat C-1

P/N 106-6031

8.4.5.2 Contactor Box Wiring Assemblies – 6-Pin (Left Element)

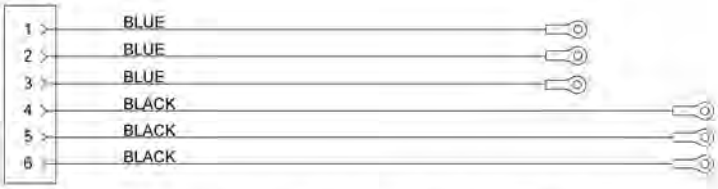

P/N 106-6281 14/17 kW or P/N 106-6054 22 kW

8.4.5.3 Contactor Box Wiring Assemblies – 9-Pin (Right Element)

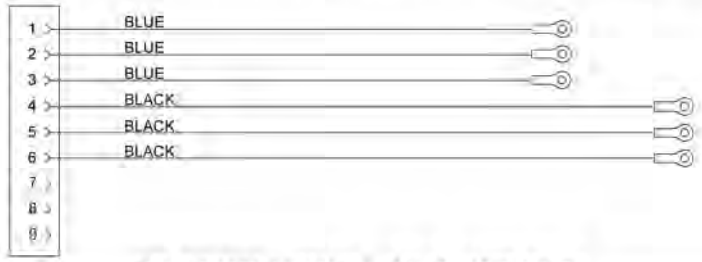

P/N 106-6282 14/17kW or P/N 106-6055 22 kW

8.4.5.4 Main Wiring Harness

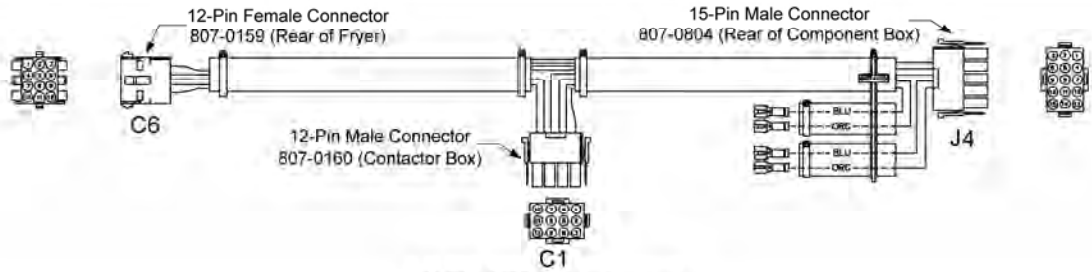

P/N 807-4195 Wiring Harness

8.4.5.5 Component Box and Filter Pump Wiring Harnesses

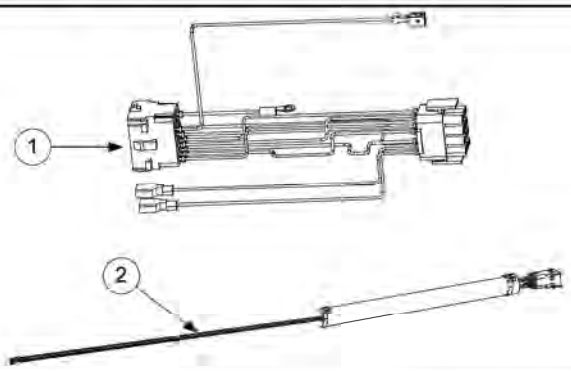

ITEM	PART #	COMPONENT
1	106-5750	Full Vat Control Harness J4 to J2 ***(WIR0765 – Navy Jumper Wire Kit is needed with this harness)***
2	106-5935	Filter Pump C2 to Component Box Wiring Harness

8.4.5.6 Interface Board to Controller Wiring Harness – 15-Pin

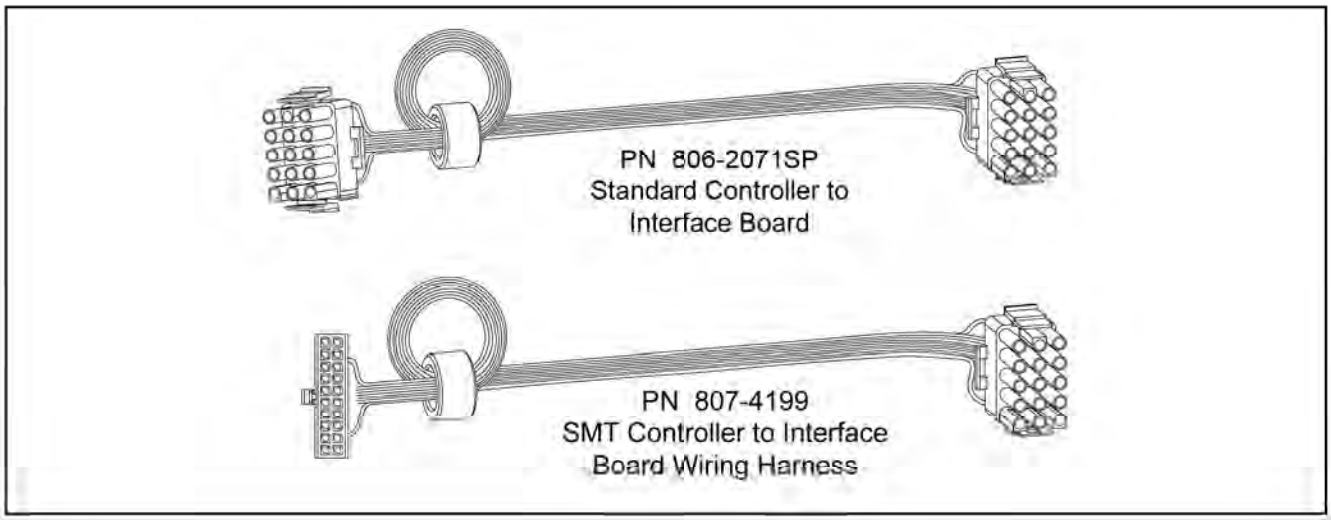

8.5 Filtration System Components

8.5.1 FPH17 Filtration Components

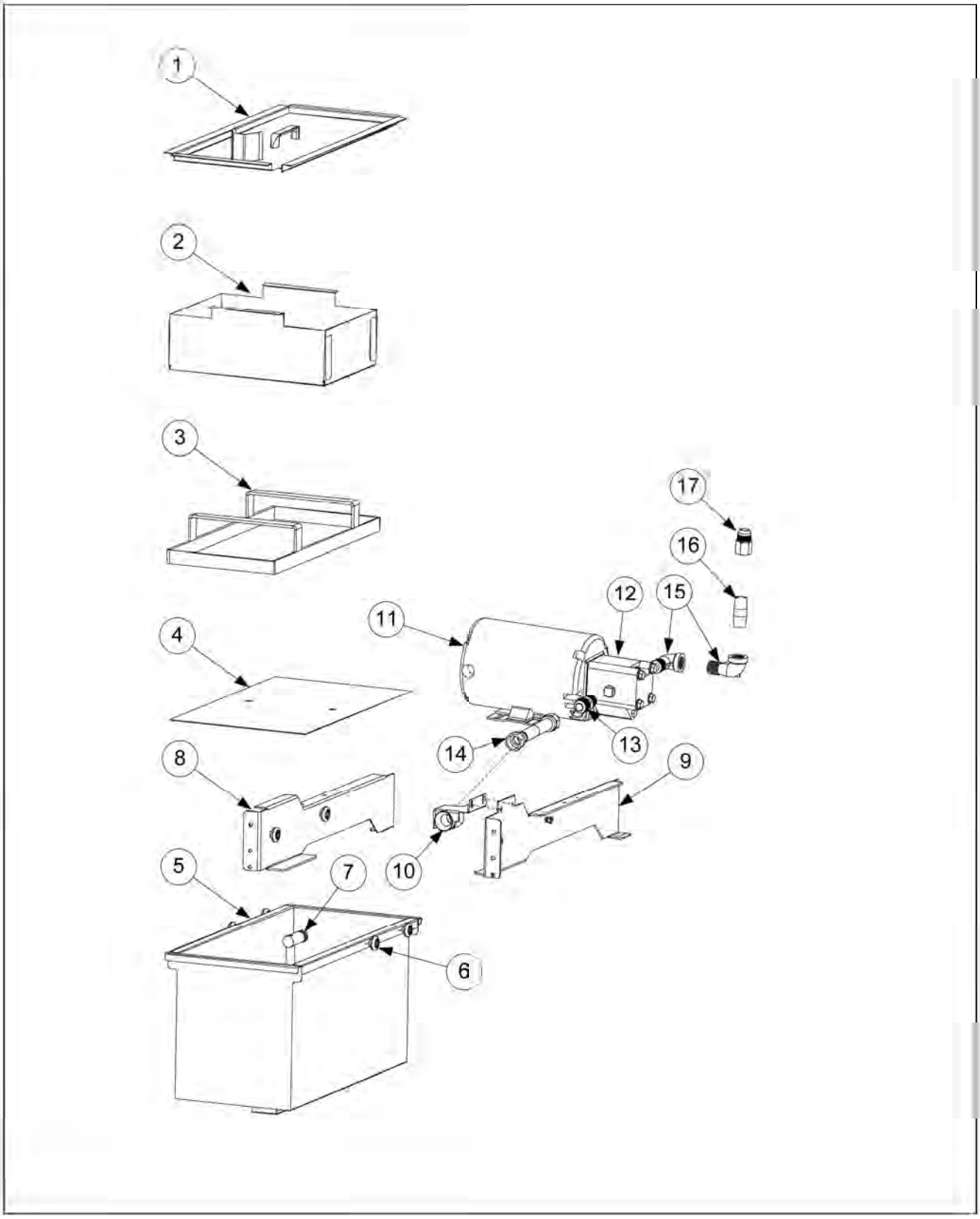

8.5.1 FPH17 Filtration Components (cont.)

ITEM	PART #	COMPONENT
	106-5983	Assembly, Filter Pan Single includes pan and lid
1	106-6243	Lid, Single
2	824-1707	Crumb Tray
3	823-5774	Hold Down Ring - Paper
4	220-1316	Sana Grid Filter Screen
5	823-5594	Pan, Filter
6	810-2198	Roller, Filter Pan Rail (used with Item 8 and 9)
*	826-1979	Filter Pan Roller Kit (four each of Items 6 and 826-1372)
*	826-1372	Nut, ¼-20 Hex (Pkg. of 10)
*	810-2012	Rail Set, Filter Pan Roller (includes one left and one right)
7	826-1392	O-Ring (Pkg. of 5; used with Item 5)
8	106-5981	Support, Assy. Left Filter Pan
9	106-5982	Support, Assy. Right Filter Pan
10	823-5591	Fitting, Female Suction Tube
11	826-1270	Motor and Gasket Kit, 220-240V 50/60Hz
12	826-1264	Pump and Gasket Kit
	810-2716	Pump, Viking 4GPM 2-piece
	816-0093	Gasket, Pump/Motor
*	807-11973	Viking Pump Seal Kit
13	810-1668	Adapter, ⅝-inch to ½-inch NPT Male
14	810-1680	Flexline, 6.5-inch Oil Return
15	813-0165	Elbow, ST ½-inch x ½-inch NPT 90° BM
16	813-0298	Nipple, ½-inch 2.0-inch
17	810-1669	Adapter, ⅝-inch to ½-inch NPT Female
*	106-2852SP	Heater Strip Assembly, 208-250V 25W 18"

* Not illustrated.

8.5.2 Multiple Battery Filtration System Components

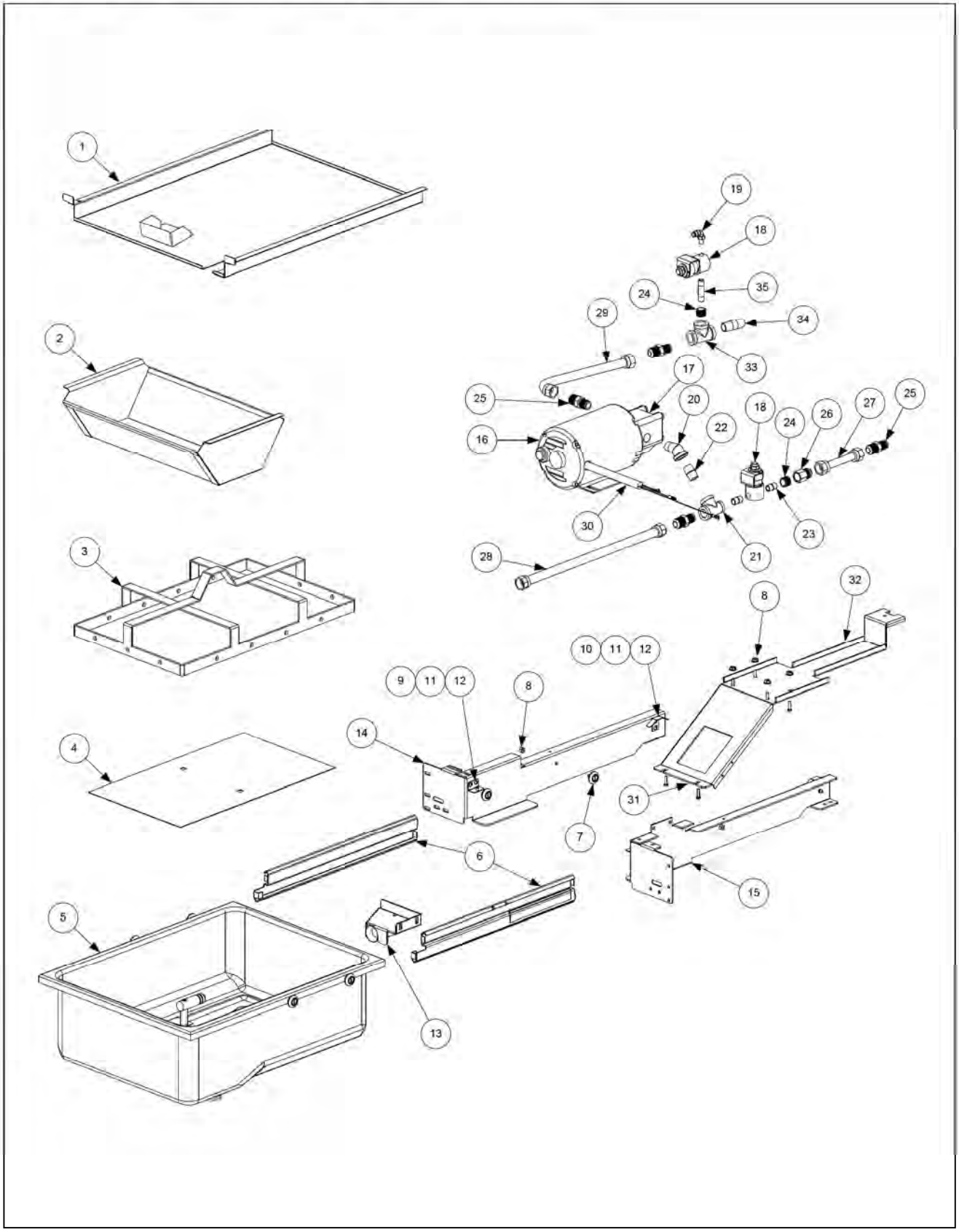

8.5.2 Multiple Battery Filtration System Components (cont.)

ITEM	PART #	COMPONENT
*	826-1979	Filter Pan Roller Kit (four each of Items 7 and 8)
*	826-1980	Service Filter Pan (Item 5 minus Item 2)
*	826-1981	Service Filter Pan Assembly (Service Filter Pan above plus Items 3 & 4)
*	826-1392	O-Ring (Pkg. of 5; used with Item 5)
*	813-0568	Plug, ⅛-inch Socket Head Pipe (component of Item 5; two required)
*	811-1071	Tubing, ¼-inch OD Teflon Vent (sold by the foot)
*	806-5933SP	Heater Strip Assembly, 120V 18" 25W
1	823-4787	Lid
2	810-2743	Crumb Tray (component of Item 5)
3	810-2910	Hold Down Ring
4	200-2124	SanaGrid Filter Screen
5	106-2617SP	Pan, One-Piece Filter (includes Item 2)
6	810-2012	Rail Set, Filter Pan Roller (includes one left and one right)
7	810-2198	Roller, Filter Pan and Rail
8	826-1372	Nut, ¼-20 Hex (Pkg. of 10)
9	823-4675	Bracket, Lid Support
10	200-3556	Guide, Filter Pan Lid
11	809-0503	Screw, 8-32 X ½-inch Slotted Truss Head
12	809-0247	Nut, 8-32 Hex Keps
13	823-3879	Suction Tube
14	200-4408	Rail, Left Filter
15	200-4409	Rail, Right Filter
16	826-1712	Kit, Motor and Gasket 115V 60Hz
17	826-1264	Pump and Gasket Kit 4 GPM 2-piece
	816-0093	Gasket, Pump/Motor
*	807-11973	Pump Seal Kit
18	807-2484	Valve, ¼-inch Solenoid
19	813-0165	Elbow, ½-inch 90° Street
20	813-0342	Elbow, ½-inch 45° Street
21	813-0530	Tee, ½-inch X ¼-inch X ½-inch Reducing
22	813-0022	Nipple, ½-inch Close
23	813-0838	Nipple, ¼-inch Close
24	813-0304	Bushing, ½-inch to ¼-inch Flush
25	810-1668	Adapter, ⅝-inch to ½-inch NPT Male
26	810-1669	Adapter, ⅝-inch to ½-inch NPT Female
27	810-1159	Flexline, 5.0-inch Oil Return
28	810-1057	Flexline, 13.0-inch Oil Return
29	810-1055	Flexline, 11.5-inch Oil Return
30	807-3828	Cable, FootPrint Pro Pump Motor
31	826-1375	Screw, 10-32 X ¾-inch Hex Trim Head (Pkg. of 5)
32	200-7112	Bridge, Filter Motor
33	813-0003	Tee, ½-Inch
34	813-0298	Nipple, ½-inch 2.0-inch
35	813-0537	Nipple, ¼-inch 2.0-inch
*	810-1043	Flexline, 9.5-inch Oil Return

* Not illustrated.

8.6 Frypot Assembly and Thermostat

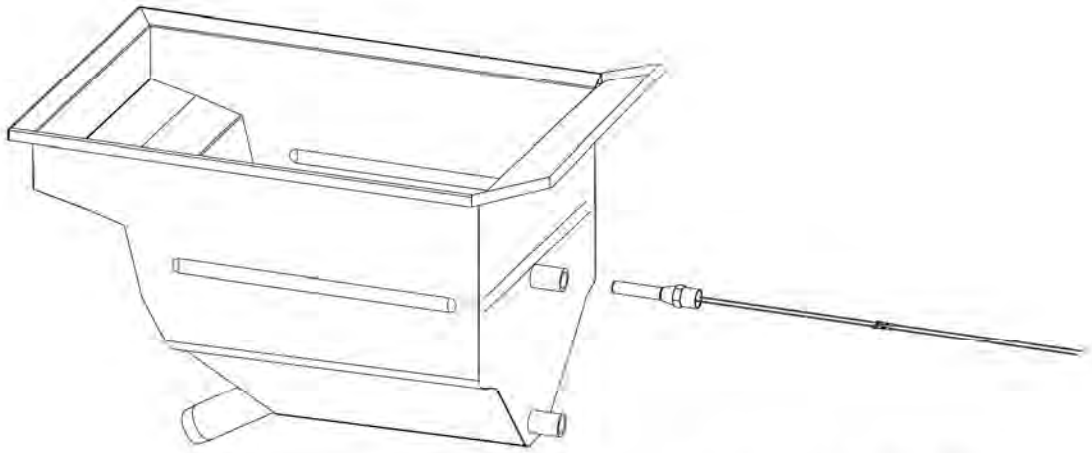

Frypot P/N 823-5359SP

Thermostat P/N 806-7543

8.7 Oil Return System Components

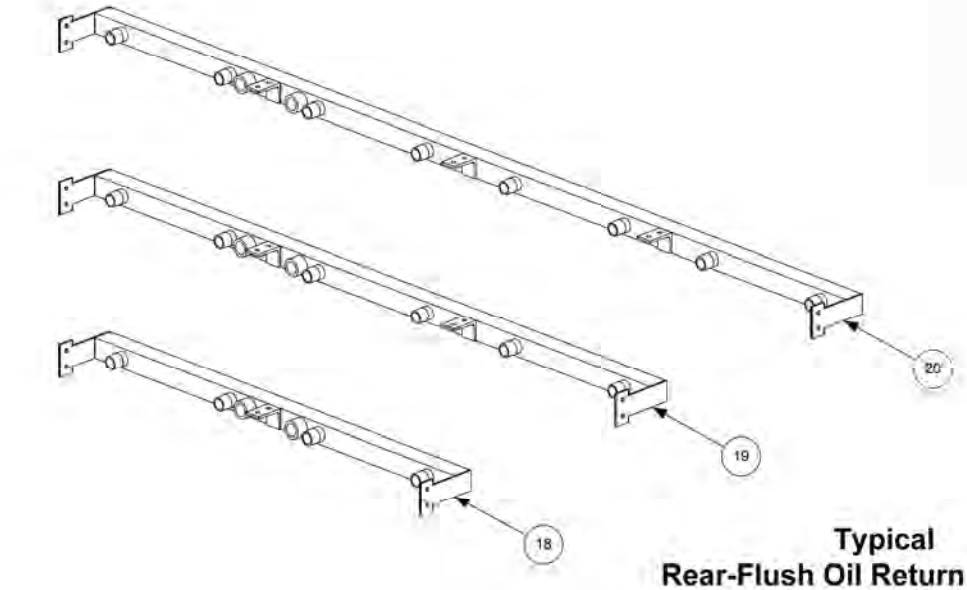

Typical
Rear-Flush Oil Return Plumbing

Plumbing for a two-fryer battery is illustrated, but all components except the oil return manifold are the same regardless of the number of fryers in the battery.

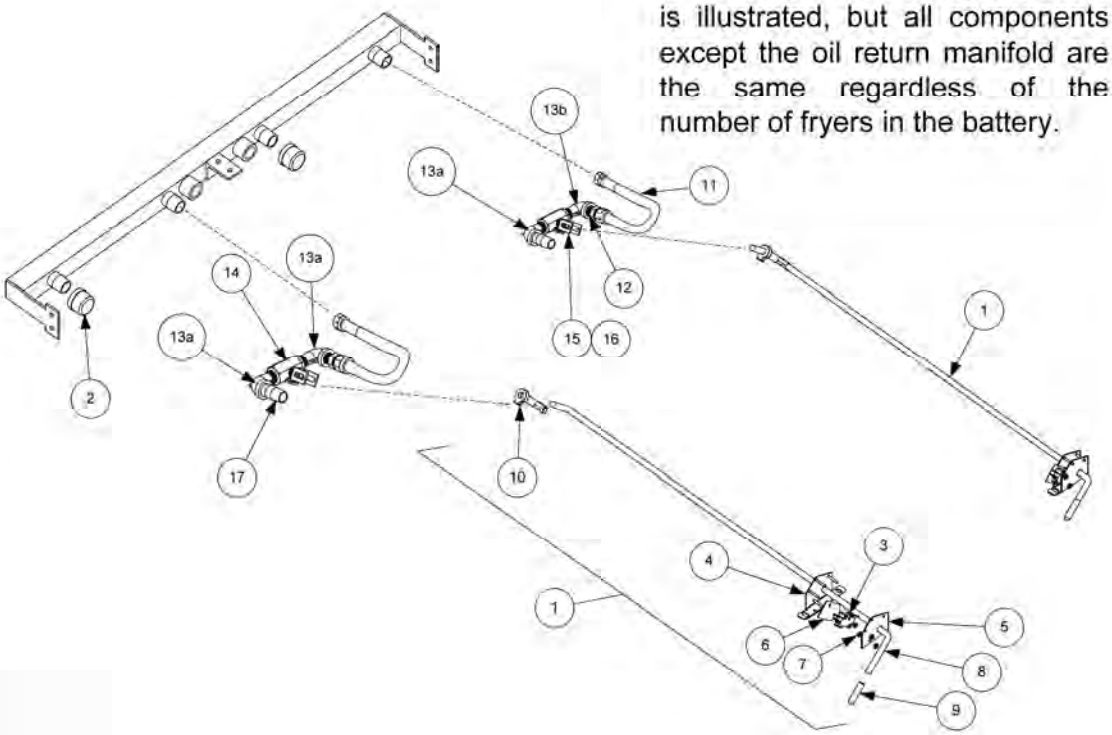

8.7 Oil Return System Components (cont.)

ITEM	PART #	COMPONENT
1	106-5848	Handle Assembly
2	813-0907	Cap, 15/16-inch Valve Safety
3	807-2103	Microswitch, Straight Lever
4	106-5847	Bracket Assembly, Microswitch
5	210-8998	Bracket, Handle Retainer
6	816-0220	Insulation, Oil Return Microswitch
7	826-1366	Nut, 4-40 Keps Hex (Pkg. of 25)
8	810-3034	Rod, Filter Handle
9	816-0643	Grip, Oil Return Valve Handle
10	809-0601	Clip, Clevis
11	810-2532	Flexline, 7.0-inch
12	810-1668	Adapter, ⅝-inch to ½-inch NPT Male
13a	813-0165	Elbow, ½-inch X 90° Street
13b	813-0908	Adapter, ½-inch NPT M/T 90° ***(used only on side next to cabinet)***
14	810-2944	Valve, ½-inch Ball
15	200-5438	Handle, Rear Flush Valve
16	900-2935	Retainer, Oil Return Valve Nut
17	813-0460	Nipple, ½-inch X 3.0-inch NPT
18	810-3015	Manifold, Two-Station Fryer ***(use 810-2543 for non-filter units)***
19	810-3016	Manifold, Three-Station Fryer ***(use 810-2544 for non-filter units)***
20	810-3017	Manifold, Four-Station Fryer ***(use 810-2545 for non-filter units)***

8.8 Wiring Connectors, Pin Terminals and Power Cords

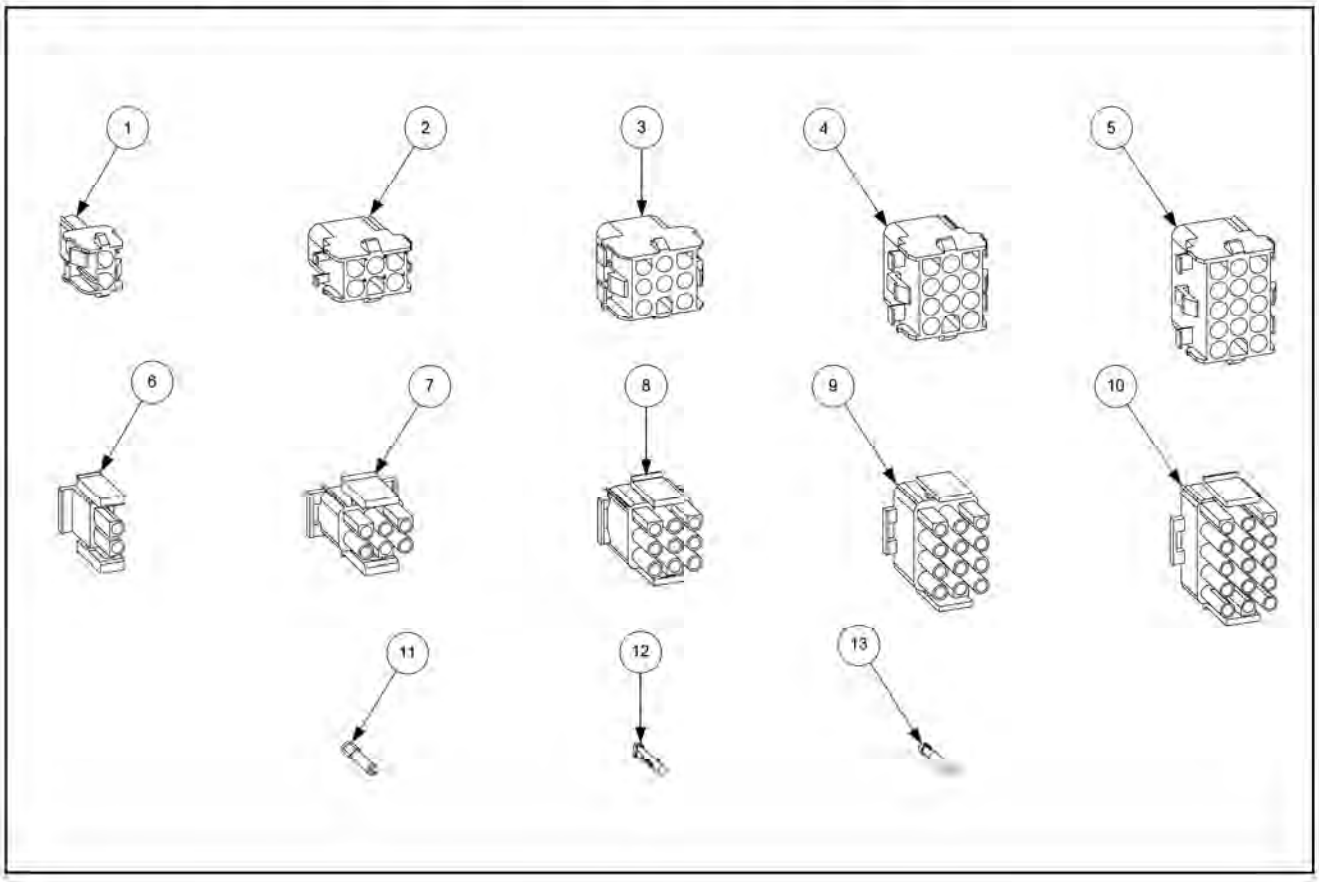

ITEM	PART #	COMPONENT
		Power Cords
*	807-3834	Cable, 3-Phase 4-Wire (Fryer Power Cable)
*	807-3825	Cord, Filter System Power
		Connectors
1	807-1068	2-Pin Female
2	807-0158	6-Pin Female
3	807-0156	9-Pin Female
5	807-0159	12-Pin Female
5	807-0875	15-Pin Female
6	807-1067	2-Pin Male
7	807-0157	6-Pin Male
8	807-0155	9-Pin Male
9	807-0160	12-Pin Male
10	807-0804	15-Pin Male
11	826-1341	Terminal, Female Split Pin (Pkg of 25)
12	826-1342	Terminal, Male Split Pin (Pkg of 25)
13	807-2518	Plug, Mate-N-Lock (Dummy Pin)

* Not illustrated.

8.9 Fasteners

ITEM	PART #	COMPONENT
*	809-0429	Bolt, ¼-inch – 20 x 2.00-inch Hex Head ZP Tap
*	809-0514	Capscrew, 5/16-inch-18 NC Hex
*	809-0448	Clip, Tinnerman
*	826-1366	Nut, 4-40 Keps Hex (Pkg. of 25) (809-0237)
*	826-1358	Nut, 6-32 Keps Hex (Pkg. of 25) (809-0049)
*	809-0247	Nut, 8-32 Keps Hex
*	826-1376	Nut, 10-32 Keps Hex (Pkg. of 10) (809-0256)
*	809-0766	Nut, 10-32 Keps Hex SS
*	809-0581	Nut, ½ NPT Locking
*	809-0020	Nut Cap 10-24 NP
*	826-1372	Nut Grip ¼-inch 1/4-20 Hex NP (Pkg. of 10) (809-0059)
*	809-0417	Nut Flange ¼-inch 1/4-20 Serr
*	809-0535	Nut, "T" ¼-inch-20 x 7/16 SS
*	809-0540	Nut, Lock ½-inch-13 Hex 2-Way ZP
*	826-1359	Screw, 4-40 x ¾-inch Slotted Round Head (Pkg. of 25) (809-0354)
*	826-1365	Screw, 6-32 x ⅜-inch Slot Head (Pkg. of 25) (809-0095)
*	809-0357	Screw, 6 x ⅜-inch Phillips Head NP
*	809-0359	Screw, 8 x ¼-inch Hex Washer Head
*	809-0360	Screw, 8 x ⅜-inch Hex Washer Slot Head
*	826-1371	Screw, 8 x ½-inch Hex Head ZP (Pkg. of 25) (809-0361)
*	809-0364	Screw, 8 x ⅝-inch Hex Washer Head ZP
*	809-0518	Screw, 8-32 x ⅜-inch Hex Washer Slotted Head SS
*	809-0104	Screw, 8-32 x ½-inch Slotted Head ZP
*	826-1363	Screw, 8-32 x ½-inch NP (Pkg. of 25) (809-0103)
*	826-1360	Screw, 10-24 x 5/16-inch Round Slot Head ZP (Pkg. of 25) (809-0024)
*	826-1330	Screw, 10-32 x ⅜-inch Slot Head SS (809-0117)
*	809-1003	Screw, 10-32 x ⅜-inch Hex Trim Head SS
*	826-1375	Screw, 10-32 x ¾-inch Hex Trim Head SS (Pkg. of 5) (809-0401)
*	809-1000	Screw, 10-32 x 1¼-inch Hex Sck C/S
*	826-1374	Screw, 10 x ½-inch Hex Head (Pkg. of 25) (809-0412)
*	809-0266	Screw, 10 x ½-inch Phillips Head ZP
*	809-0434	Screw, 10 x ⅜-inch Hex Washer Head NP
*	809-0123	Screw, 10 x ¾-inch Slot Head
*	826-1389	Screw, 1/4-20 x ¾-inch Hex Head ZP (Pkg. of 10) (809-0131)
*	809-0582	Washer ½ NPT Locking
*	809-0184	Washer, #10 LK ZP
*	809-0190	Washer, .625 X .275 X 40 Flat SS
*	809-0191	Washer, Lock 1/4 Spring ZP
*	809-0193	Washer, Flat 1/4 Nylon
*	809-0194	Washer, Flat 5/16 ZP

THIS PAGE INTENTIONALLY LEFT BLANK

Frymaster, L.L.C., 8700 Line Avenue, Shreveport, LA 71106

TEL 1-318-865-1711 FAX (Parts) 1-318-688-2200 (Tech Support) 1-318-219-7135

PRINTED IN THE UNITED STATES

SERVICE HOTLINE
1-800-551-8633

819-6203
NOVEMBER 2008

Ref: NAVSEAINST 4160.3A NAVSEA S0005-AA-GYD-030/TMMP

NAVSEA/SPAWAR TECHNICAL MANUAL DEFICIENCY/EVALUATION REPORT (TMDER)

INSTRUCTIONS: Continue on 8 ½" x 11" page if additional space is needed.
1. Use this report to indicate deficiencies, problems and recommendations relating to publications.
2. For CLASSIFIED TMDERs see OPNAVINST 5510H for mailing requirements.
3. For TMDERs that affect more than one publication, submit a separate TMDER for each.
4. Submit TMDERs at web site https://nsdsa2.phdnswc.navy.mil or mail to: **COMMANDER, CODE 310 TMDER Bldg 1388, NAVSURFWARCENDIV NSDSA, 4363 MISSILE WAY, PORT HUENEME CA 93043-4307**

1. PUBLICATION NUMBER	2. VOL/PART	3. REV/DATE or CHG/DATE	4. SYSTEM/EQUIPMENT ID
S6161-VX-FSE-010		REV 1/15 APRIL 2009	

5. TITLE OF PUBLICATION	6. REPORT CONTROL NUMBER (6 digit UIC-YY-any four: xxxxxx-03-xxxx)
REFRIGERATOR/FREEZER, MODULAR, MODEL R10F10-2M-SNL-MLR; DESCRIPTION, OPERATION AND MAINTENANCE	

7. RECOMMEND CHANGES TO PUBLICATION

7a. Page #	7b. Para #	7c. RECOMMENDED CHANGES AND REASONS

8. ORIGINATOR'S NAME AND WORK CENTER	9. DATE	10. ORIGINATOR'S E-MAIL ADDRESS	11. TMMA of Manual (NSDSA will complete)

12. SHIP OR ACTIVITY Name and Address (Include UIC/CAGE/HULL)	13. Phone Numbers:
	Commercial (___) ___-____ DSN ___-____ FAX (___) ___-____

S6161-1C-FSE-010