S6161-Z9-FSE-010

0910-LP-105-2120

TECHNICAL MANUAL

FOR

FOOD MIXING MACHINE, HOBART MODELS HL600, HL661, AND HL662, 60 QUART, 440 VOLT, 60 CYCLE, 3-PHASE; INSTALLATION, OPERATION, AND CARE, INCLUDING CATALOG OF REPLACEMENT PARTS

Distribution Statement A: Approved for public release; distribution is unlimited.

DEPARTMENT OF THE NAVY
NAVAL SEA SYSTEMS COMMAND

0910-LP-105-2120

31 MAY 2006

S6161-Z9-FSE-010

31 May 2006

IDENTIFYING TECHNICAL PUBLICATION SHEET FOR COMMERCIAL MANUAL

1. PURPOSE: This technical publication sheet is issued for the purpose of identifying and authorizing the following commercial manual for Navy use.

Manufacturer: ITW Food Equipment Group LLC, DBA Hobart
701 South Ridge Avenue
Troy, OH 45374-0001
CAGE 28873

Purchase Order or Contract No.: 4500184262

Requisition No.:

Equipment: Food Mixing Machine, Hobart Models HL600, HL661, and HL662, 60 Quart, 440 Volt, 60 Cycle, 3-Phase;

National Stock Number: 0910-LP-105-2120
Title: Technical Manual

Additional Identification:

Date: 31 May 2006

2. FILE LOCATION: The above-described commercial manual is filed in _____. (Each library will fill this in if this identifying technical publication sheet is filed separately from the commercial manual.)

3. AUTHORITY NOTICE AND DISTRIBUTION STATEMENT:

Published by direction of Commander, Naval Sea Systems Command.

Distribution Statement A: Approved for public release; distribution is unlimited.

FOR UNCLASSIFIED MANUALS

NOTICE: Reproduction for non-military use of the information or illustration in this publication is not permitted. The policy for military use reproduction is established in OPNAVINST 5510.1B.

This document contains copyright or proprietary materials. Infringement of copyright or proprietary materials may violate existing Federal laws and statutes and result in criminal penalties, imprisonment, or removal from office.

HOBART

LEGACY™

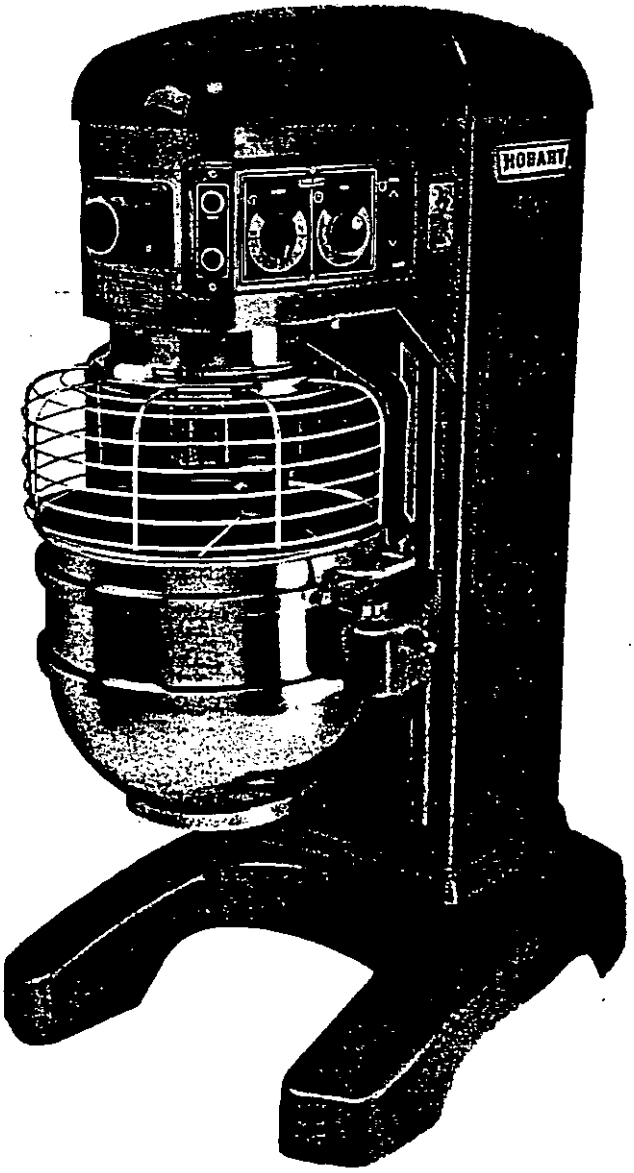

Models
HL600, HL661 & HL662
ML-134145
ML-134218
ML-134219

INSTRUCTION MANUAL

701 S. RIDGE AVENUE TROY, OHIO 45374-0001

937-332-3000 · WWW.HOBARTCORP.COM

FORM 34800 Rev. B (MARCH 2003)

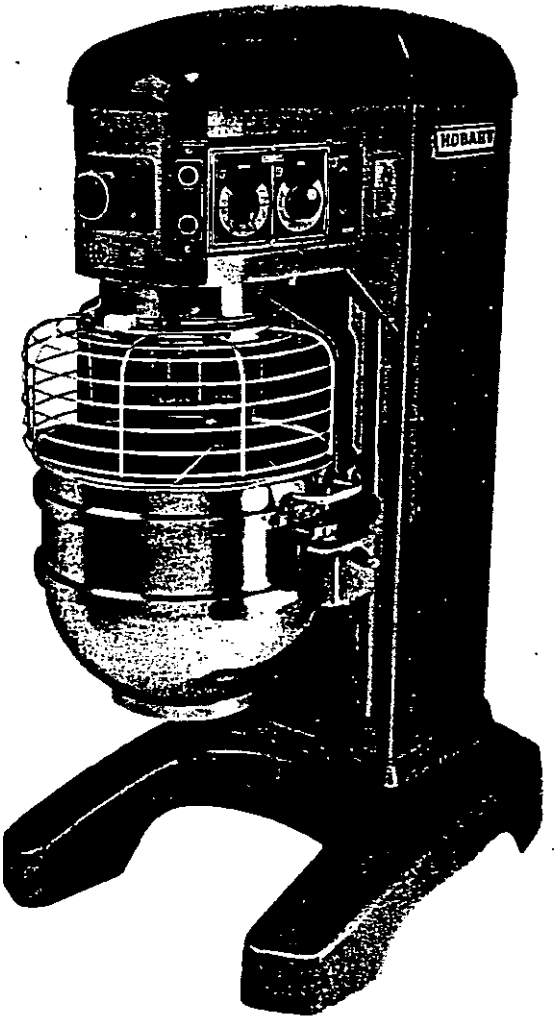

LEGACY 60-QUART MIXER

TABLE OF CONTENTS

GENERAL 4

INSTALLATION 5
- Unpacking 5
- Location 5
- Electrical Connections 6

OPERATION 7
- Controls 8
- Bowl Placement 11
- Agitator 11
- Power Bowl Lift 11
- Prepare for Mixing 12
- Timer Operation 12
- Operating Notes 13
- Unloading 14
- Wire Cage 14
- Agitators and Attachments 15

CLEANING 16

MAINTENANCE 17
- Lubrication 17
- Adjustments 18

TROUBLESHOOTING 20
- Service 20

Installation, Operation and Care of Legacy™ 60-Quart Mixers

SAVE THESE INSTRUCTIONS

GENERAL

The Legacy 60-quart mixer series are heavy-duty mixers which feature a 2.7-horsepower motor, digital Smart™ Timer, a power bowl lift and a #12 attachment hub as standard equipment.

The Legacy series is available in three models:

- The HL600 is equipped with Stir, plus four mixing speeds.
- The HL661 is equipped with one mixing speed.
- The HL662 is equipped with two mixing speeds.

A 40-quart bowl and agitators are also available.

A variety of attachments, agitators and accessories are available. These are described in a separate *Use and Applications Handbook*, which is furnished on the Legacy Mixer Operator Training CD provided with each mixer.

INSTALLATION

UNPACKING

Immediately after unpacking the mixer, check for possible shipping damage. If this machine is found to be damaged after unpacking, save the packaging material and contact the carrier within 15 days of delivery.

LOCATION

Prior to installation, test the electrical service to assure that it agrees with the specifications on the machine data plate.

Place the mixer in its operating location. There should be adequate space around the mixer for the user to operate the controls and to install and remove bowls. The area above and to the right side of the mixer should allow the top and side covers to be removed for routine maintenance and servicing.

Once in position, the mixer must be leveled:

- Remove the two top cover screws and the top cover.
- Place a level on the top rim of the large pulley (Fig. 1). Slide shims under the base contact surface of the mixer as required to level it front-to-back and side-to-side.
- Do not replace the top cover until installation is completed.

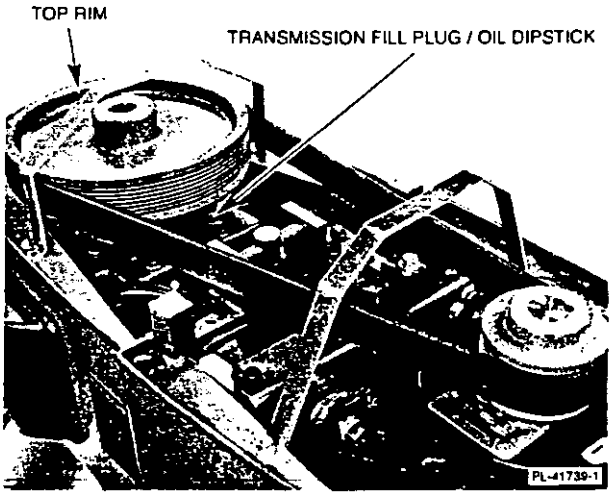

Fig. 1

Check Lubrication Before Use

This mixer is shipped with oil in the transmission. Check oil level before starting mixer. Refer to Lubrication on page 17 for applicable lubrication procedures.

ELECTRICAL CONNECTIONS

WARNING: ELECTRICAL AND GROUNDING CONNECTIONS MUST COMPLY WITH THE APPLICABLE PORTION OF THE NATIONAL ELECTRICAL CODE AND/OR OTHER LOCAL ELECTRICAL CODES.

WARNING: DISCONNECT THE ELECTRICAL POWER TO THE MACHINE AND FOLLOW LOCKOUT / TAGOUT PROCEDURES.

A hole for 3/4"-trade-size conduit is located at the top of the pedestal. Make electrical connections per the wiring diagram located on the inside of the top cover.

Single-Phase Mixer:

- Connect field supply lead wires to L1 and L2.
- Connect ground wire to ground lug on the mixer.
- Cut off stripped portion of L3 on Legacy Mixer and wrap securely with electrical tape to insulate the exposed conductor.

Three-Phase Mixer:

- Connect field supply lead wires to L1, L2 and L3.
- Connect ground wire to ground lug on the mixer.

Check Initial Operation

1. Apply power to the mixer.
2. Turn the SPEED dial pointer to STIR for the HL600 and to 1 for the HL661 and HL662.
3. Install the bowl and lock into mix position, with the Bowl Support all the way up and bowl guard closed. Momentarily run the machine by pushing the START and then STOP buttons.

OPERATION

WARNING: MOVING AGITATOR IN BOWL, KEEP HANDS, CLOTHING AND UTENSILS OUT WHILE IN OPERATION. DO NOT USE WITHOUT INTERLOCKED GUARD.

The Legacy mixer is equipped with Smart™ Timer controls and a power bowl lift. Other operating parts (Fig. 2) and their functions are described throughout the Operation section.

The Wire Cage must be in position or the mixer will not operate.

The bowl must stay in locked position on Bowl Support or the mixer will not operate.

If the Bowl Support is not all the way up (mix position), the mixer will not operate unless the START button is pressed and held.

If the Bowl Support is not at the mix position and the START button is pressed and held, the mixer will operate only in Stir speed.

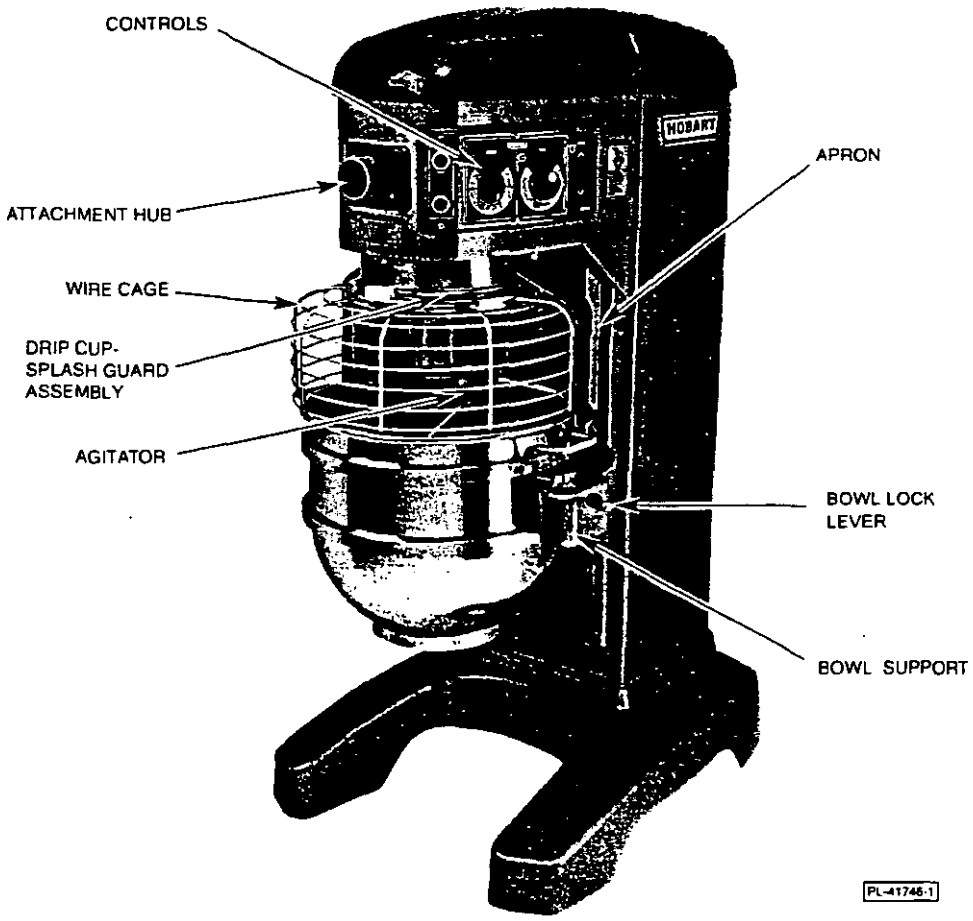

Fig. 2

CONTROLS

Model HL600 (With Four Mix Speeds Plus Stir Speed)

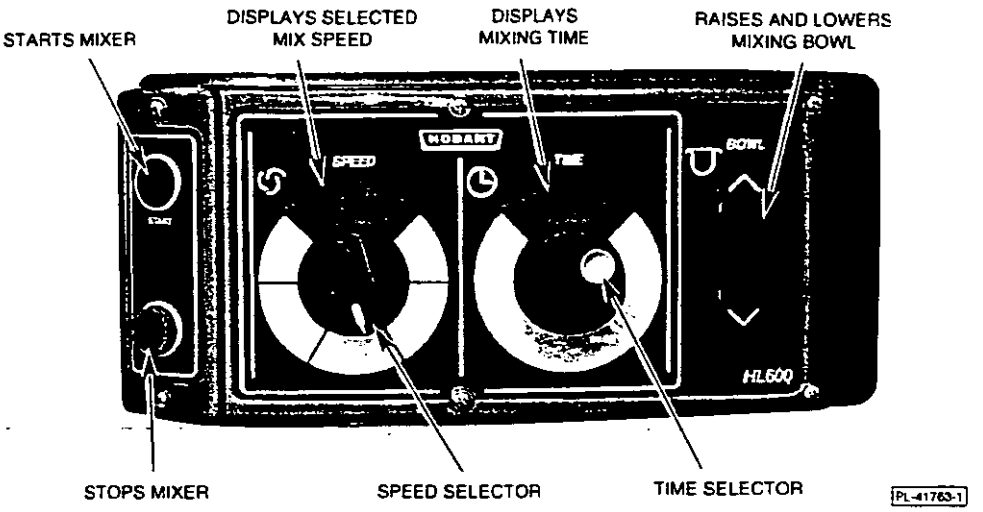

Model HL600 Mixer Speeds

STIR (Slow)	STIR speed is for incorporating ingredients at the start of each mixing process.
SPEED 1 (Low)	This speed is for heavy mixtures such as pizza dough, heavy batters and potatoes.
SPEED 2 (Medium-low)	This speed is for mixing cake batters, mashing potatoes and developing bread dough.
SPEED 3 (Medium-high)	This speed is for incorporating air into light batches, as well as finishing whipped items.
SPEED 4 (High)	This speed is for maximum and accelerated air incorporation into light batches.

Model HL661 (With One Mix Speed Plus Meat Grind, Cheese Shred, Vegetable Slice Speeds)

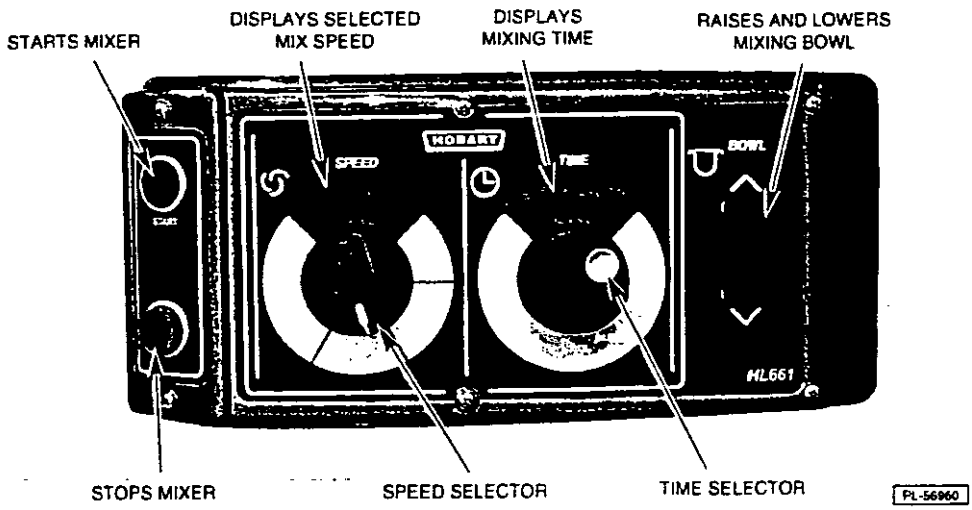

Model HL661 Mixer Speeds

SPEED 1	This speed is for heavy mixtures such as pizza dough.
MEAT GRIND	This speed is for grinding meat.
CHEESE SHRED	This speed is for shredding cheese.
VEGETABLE SLICE	This speed is for slicing vegetables.

Model HL662 (With Two Mix Speeds Plus Meat Grind, Cheese Shred, Vegetable Slice Speeds)

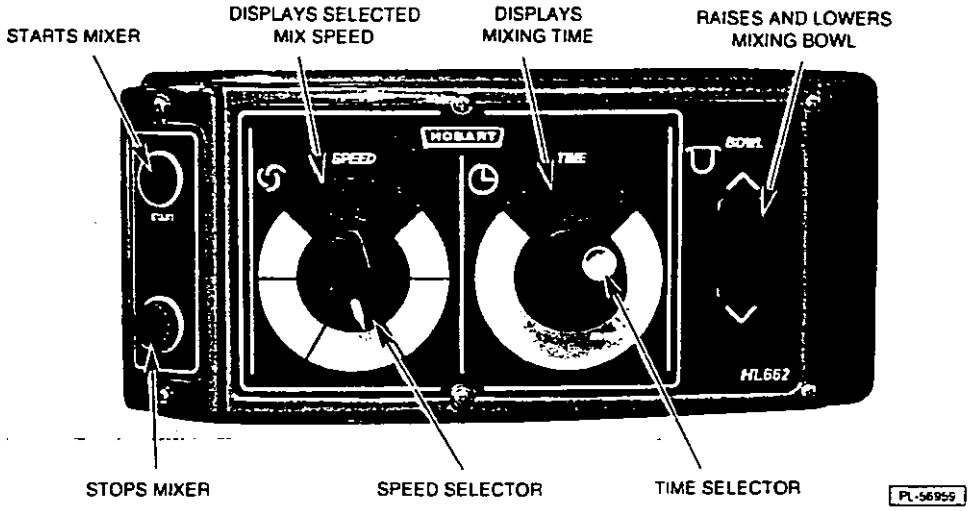

Model HL662 Mixer Speeds

SPEED 1 (Slow)	This speed is for heavy mixtures such as pizza dough.
SPEED 2 (Low)	This speed is for developing pizza dough.
MEAT GRIND	This speed is for grinding meat.
CHEESE SHRED	This speed is for shredding cheese.
VEGETABLE SLICE	This speed is for slicing vegetables.

BOWL PLACEMENT

The bowl must be installed before the agitator is installed.

To install the bowl, fully lower the bowl support. Position bowl so the alignment pins on the left side of the bowl support fit in the holes in the bowl. Swing the bowl into the locked position on bowl support.

AGITATOR

To install an agitator, the bowl must be on the bowl support and fully lowered.

To Install

1. Open the wire cage.
2. Place the agitator inside the bowl and line up the horizontal slot on the agitator with the agitator shaft pins.
3. Slide the agitator up the agitator shaft until it stops and latches.

To Remove

1. Open the wire cage.
2. Lower the bowl by pressing and holding the down arrow on the bowl switch.
3. Hold the agitator and pull the plunger of the agitator out (Fig. 3). Slide agitator down off the agitator shaft.

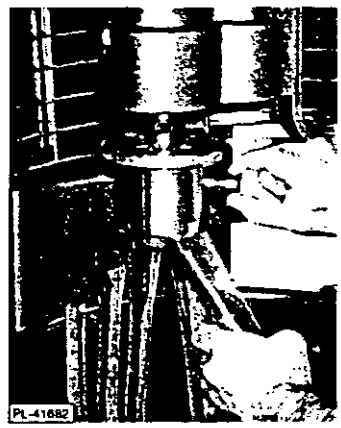

Fig. 3

POWER BOWL LIFT

CAUTION: Before lowering the bowl onto a bowl truck, always unlock bowl and swing bowl out slightly.

To raise the bowl, the bowl must be in the locked position. Push and hold the up arrow on the bowl switch. To lower the bowl, push and hold the down arrow on the bowl switch.

To Raise the Bowl While Mixing

To raise the bowl while the agitator is mixing the product (when required by recipe or when using the Bowl Scraper Attachment):

1. Close the wire cage, then select a mixing speed on the SPEED dial.
2. Select a count-down time or HOLD for continuous count-up mixing.
3. While pressing and holding the up arrow on the bowl switch, press and hold the START button. The mixer runs only in stir speed while the bowl is rising.
4. When the bowl reaches the mix position, release the START button. The mixer automatically changes to the selected mixing speed.

PREPARE FOR MIXING

1. Place the mixing bowl on the bowl support.
2. Pour ingredients into the bowl.
3. Swing the bowl back to the locked position.
4. Place the agitator inside the bowl, then attach it to the agitator shaft (Fig. 4).
5. Return the wire cage to front-center position.
6. Push and hold the up arrow on the bowl switch until the bowl reaches the mix position and stops.
7. The mixer is now ready for mixing. (See Timer Operation.)

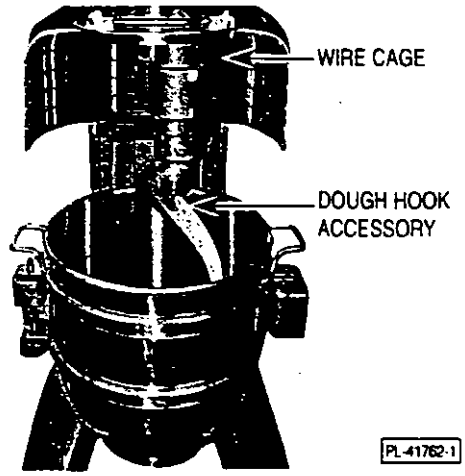

Fig.4

TIMER OPERATION

Using the Count-Up Mode (Continuous Mixing)

1. Turn the SPEED dial to select a mix speed (the SPEED setting can be changed at **any** time during the mixing operation).

   NOTE: STIR is to be used for incorporating ingredients. Do not use to develop dough products.

2. Set the timer on hold by turning the TIME selector counterclockwise until "Hold" appears in the TIME window.
3. Press the START button to begin mixing. The timer starts counting forward from 00:00.

   NOTE: If the wire cage is opened at any time, the mixing operation will stop. To resume the mixing operation, close the wire cage and press the START button.

4. Use the STOP button to stop the mixer; the mixing time is displayed in the TIME window.
5. Press the START button to resume mixing if needed.

   NOTE: When the timer reaches 50:00 minutes, it will rollover to 00:01 and continue counting until the STOP button is pressed.

Using the Count-Down Mode (Timed Mixing)

1. Turn the SPEED dial to select a mix speed.
   a. If the count-up mode was used for the previous batch, the desired time needs to be entered.
   b. If the count-down mode was used for the previous batch, the previous time will be displayed. If a different time is needed, turn the TIME selector to the desired time.
2. Press the START button to begin mixing; the timer starts counting down from the set time.
   a. To stop the mixer at any time, press the STOP button. To resume mixing, press the START button. For example: The mixer is started at SPEED 1 for 30 seconds and is stopped after 10 seconds. Pressing the START button will resume the mixing operation.
   b. If the mixer is stopped and a new time setting is entered, pressing the START button saves the new time setting on the current speed selection. For example: The mixer is started at SPEED 1 for 30 seconds and is stopped after 10 seconds. A new time is entered by turning the TIME selector. The new time will replace the initial 30 seconds for SPEED 1 after the START button is pressed.
   c. If the time is changed while mixing, the mixer will operate until the new time expires. The adjustment to the time will not be stored.
   d. If speed is changed while mixing, the time will change to the previous time for the selected speed and count down.

   NOTE: If the wire cage is opened at any time, the mixing operation will stop. To resume the mixing operation, close the wire cage and press the START button.
3. When the timer reaches 00:00, the mixer stops; a beeper sounds for 3 seconds. The count-down timer displays the last-entered time.

OPERATING NOTES

- STIR is to be used for incorporating ingredients. Do not use it to develop dough products.
- If the mixer is stopped during a mixing operation, the timer also stops. The timer starts again where it left off when the START button is pressed.
- The SPEED window will display the SPEED dial's current speed selection. Turn the TIME selector clockwise to take the mixer out of the hold mode.

UNLOADING

1. Unlock the bowl and swing-out slightly. Press and hold the down arrow on the bowl switch to lower the bowl.
2. Open the wire cage assembly.
3. Remove the agitator from the agitator shaft.
4. Remove the bowl from the bowl support.

WIRE CAGE (Fig. 5)

The wire cage can be rotated out of the way to add ingredients or to access the bowl and agitator.

Note how the grooves on the nylon retainer shoes allow the Wire Cage to ride around the circular ridge of the planetary drip cup.

- To open the wire cage, rotate it to your left.
- To close the wire cage, rotate it to your right until it stops in the front-center, closed position.

NOTE: The wire cage must be returned to the closed position for the mixer to operate.

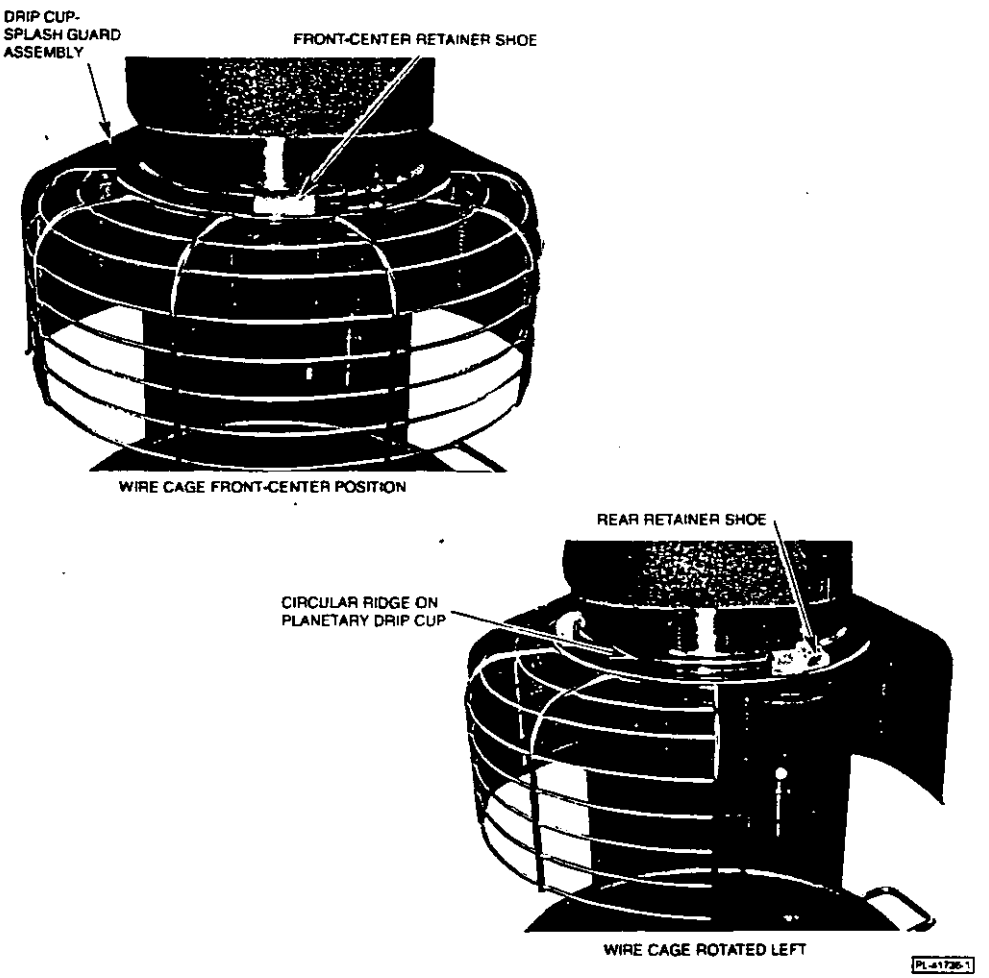

Fig. 5

Remove and Clean Wire Cage (Fig. 6)

1. Lower the bowl. Remove the agitator and bowl.
2. While holding the wire cage securely with both hands, rotate it to your left until the front-center retainer shoe reaches the gap in the circular ridge of the planetary drip cup.
3. Lower the front of the wire cage and move the wire cage slightly to the rear so the rear retainer shoes clear the ridge of the drip cup. The wire cage can now be removed.

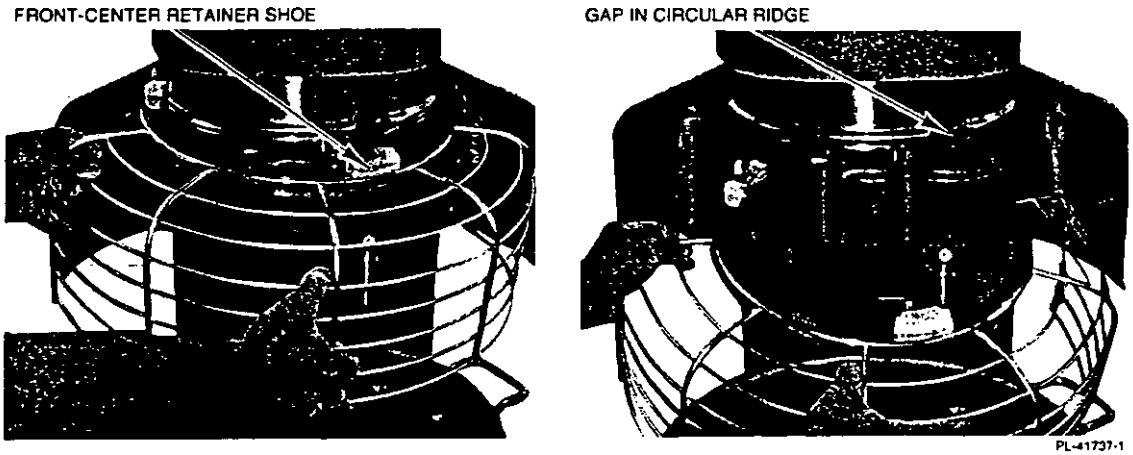

Fig. 6

4. Wash the wire cage in a sink, rinse with clear water, and dry with a clean cloth.
5. The stainless steel splash guard can be wiped off and/or washed with a cloth or sponge using warm, soapy water. Rinse with clear water and dry with a clean cloth.

Reinstall Wire Cage

1. Position the ring of the wire cage so the front-center retainer shoe is positioned below the gap in the circular ridge of the planetary drip cup.
2. Position the grooves so the rear retainer shoes straddle the circular ridge on the planetary drip cup.
3. Lift the front of the wire cage so the front-center retainer shoe passes up through the gap in the circular ridge on the planetary drip cup.
4. Rotate the wire cage to your right until all three retainer shoes straddle the ridge on the drip cup.
5. Continue rotating the wire cage so the opening is to the front of the mixer (to install the agitators) or until it stops at the front-center position.

AGITATORS AND ATTACHMENTS

Attachments for attachment hub and agitators are covered in a separate Hobart Legacy Mixer Use and Application Handbook on the Mixer Operator Information CD. Follow the instructions accordingly.

CLEANING

WARNING: DISCONNECT THE ELECTRICAL POWER TO THE MACHINE AND FOLLOW LOCKOUT / TAGOUT PROCEDURES.

New mixer bowls and accessories (beaters, whips and dough arms) should be thoroughly washed with hot water and a mild soap solution, rinsed with either a mild soda or vinegar solution and thoroughly rinsed with clear water before being used. This cleaning procedure should also be followed for bowls and agitators before whipping egg whites or whole eggs.

The mixer should be thoroughly cleaned daily. DO NOT use a hose to clean the mixer; it should be washed with a clean, damp cloth. The base allows ample room for cleaning under the mixer. The apron (Fig. 2) may be removed for cleaning by loosening the thumb screws.

The drip cup-splash guard assembly (Fig. 2) should be removed periodically and wiped clean.

For cleaning the Wire Cage refer to page 15.

MAINTENANCE

WARNING: DISCONNECT THE ELECTRICAL POWER TO THE MACHINE AND FOLLOW LOCKOUT / TAGOUT PROCEDURES.

LUBRICATION

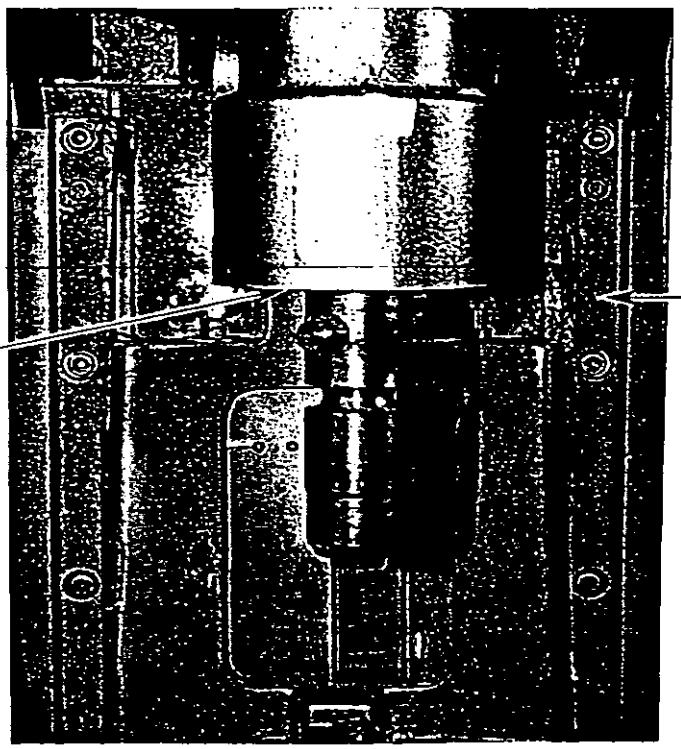

Fig. 7

Slideway

The slideways (Fig. 7) should be lubricated approximately twice a year. To reach these areas, fully lower the bowl support and remove the apron, which is secured by thumb screws. Wipe a thin coat of Lubriplate 630AA on the bowl pad area of the bowl supports and on each slideway. Install the apron.

Planetary Seal

Occasionally, the planetary seal (Fig. 7) may become dry and begin to squeak. To correct this, work a little lubrication (mineral oil) under the lip of the seal.

Transmission

To check the oil level, remove the top cover, which is secured by two screws. Remove the Transmission Fill Plug (Fig. 8) and check the oil level. If the oil level is below the line on the oil dipstick, add a small amount of the recommended transmission oil until it returns to the proper level. Do not overfill the transmission, as leakage may result. Contact your local Hobart Service Office for the recommended transmission oil.

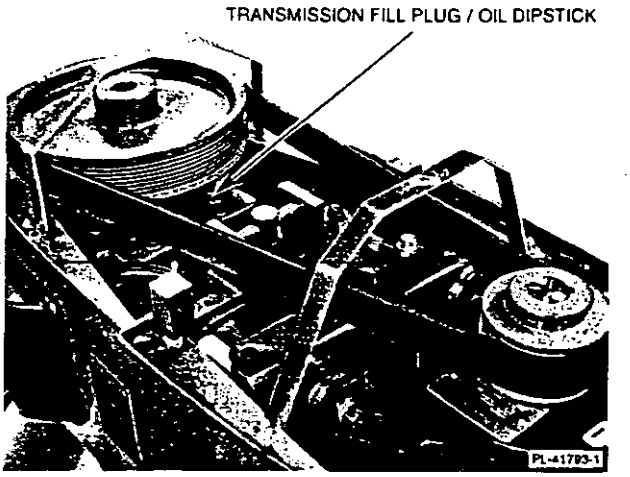

Fig. 8

ADJUSTMENTS

Agitator Clearance

The agitator clearance should be checked periodically. The agitator must not touch the bowl, and the maximum clearance between the bottom of the bowl and the B flat beater is 1/8" (3 mm); the maximum clearance between the bottom of the bowl and the ED dough arm is 5/16" (8 mm).

Install a bowl and agitator (e.g., beater). If the bowl and beater come into contact before the bowl support reaches its stop, adjust the stop screw. Refer to Adjust the Bowl/Agitator Clearance, page 19.

Measure Clearance

Pour enough flour in the bowl to cover the bottom of the bowl where the beater travels. With the bowl fully raised (beater should not touch the bottom of the bowl), briefly run the mixer at the lowest speed.

Turn off the mixer, disconnect the electrical power supply, and measure the depth of flour where the beater has traced a path. This measurement should be taken at several points around the bowl to assure accuracy.

Adjust the Bowl/Agitator Clearance

- Remove the apron (which is secured by thumbscrews).
- Adjust the stop screw on right side.
  - Loosen the bottom locking nut, (Fig. 9) and turn the stop screw counterclockwise to increase the clearance or clockwise to decrease the clearance.
  - Tighten the locking nut while holding the stop screw.
- After the adjustments are made, replace the apron and secure it with the thumbscrews.
- Reconnect the electrical power supply.
- Carefully operate the bowl lift several times to check the adjustment.

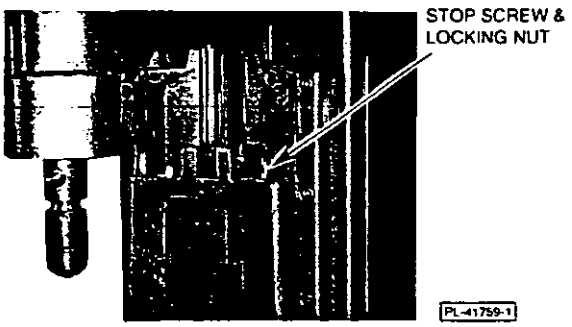

Fig. 9

TROUBLESHOOTING

Symptoms	Possible Causes
Mixer will not start.	Circuit protector is in open position - check fuse or disconnect switch. Mixer is overloaded. Wire cage is not in the closed position. Bowl is not in closed (locked) position.
Agitator touches bowl.	Bowl is not in closed (locked) position. Improper agitator clearance - see Maintenance for adjustment procedure. Agitator is not installed properly.
Planetary seal squeaks.	Seal requires occasional lubrication - see Maintenance.
Timer displays error code (ErXX).	If the error code is flashing - wait for mixer to clear error condition. If mixer continues to stop and timer displays flashing error code, disconnect electrical power from mixer for 1 minute, then reconnect. If symptoms still exist, contact your local Hobart Service office.
Alternated message of "b_in" on SPEED display.	Bowl is not in all the way. If message of "b_in" appears again after a corrective action, disconnect electrical power from mixer for 1 minute, then reconnect. If symptoms still exist, contact your local Hobart Service office.
Alternated message of "b_up" on SPEED display.	Bowl is not up all the way. If message of "b_up" appears again after a corrective action, disconnect electrical power from mixer for 1 minute, then reconnect. If symptoms still exist, contact your local Hobart Service office.
Alternated message of "b_gd" on SPEED display.	Wire cage is not closed completely. If message of "b_gd" appears again after a corrective action, disconnect electrical power from mixer for 1 minute, then reconnect. If symptoms still exist, contact your local Hobart Service office.
Message of "HI" and "LOAd" on displays.	Make sure you are not using STIR to develop dough product.

SERVICE

If service is needed on this equipment, contact your local Hobart Service office.

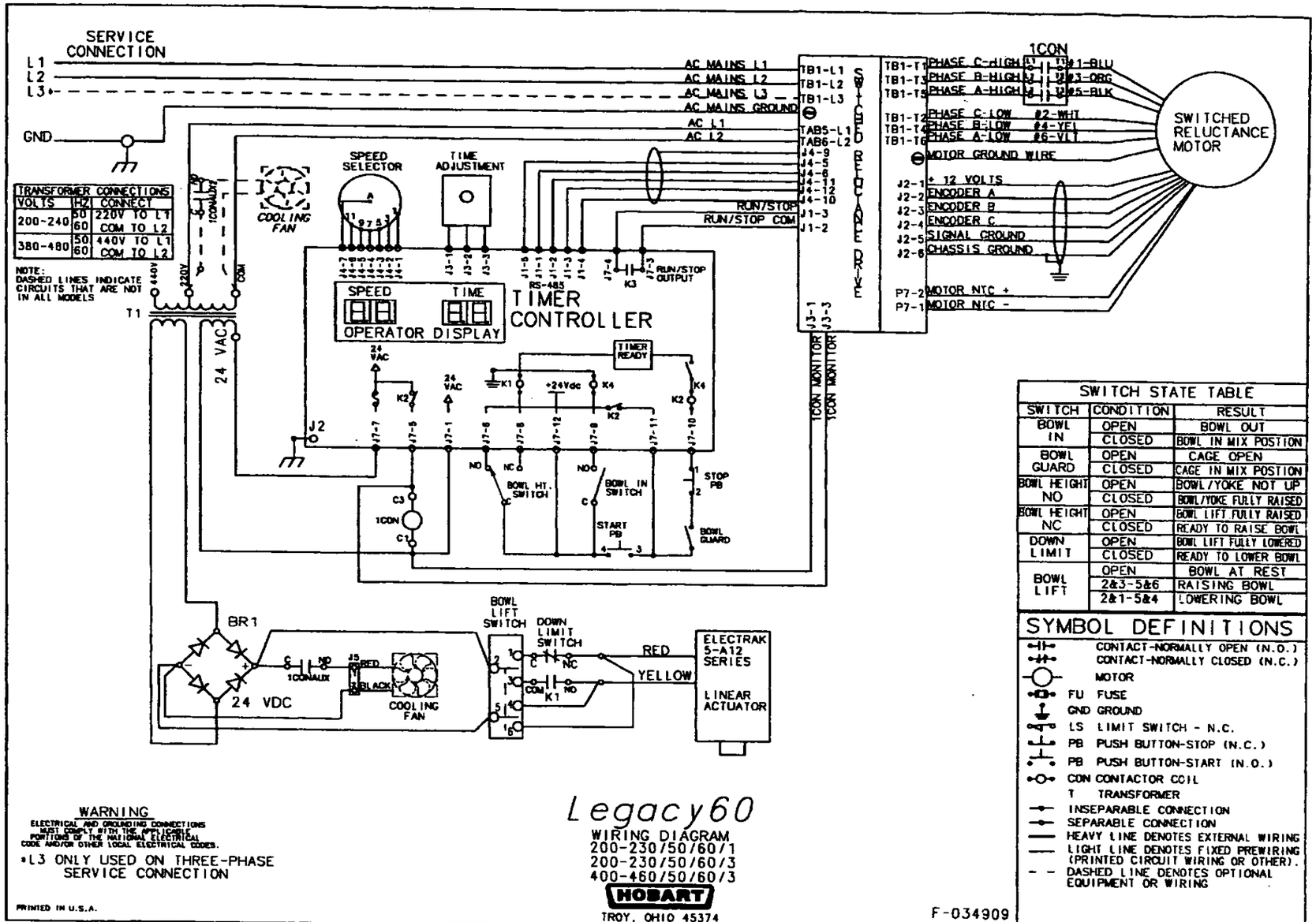

SWITCH STATE TABLE		
SWITCH	CONDITION	RESULT
BOWL IN	OPEN	BOWL OUT
	CLOSED	BOWL IN MIX POSTION
BOWL GUARD	OPEN	CAGE OPEN
	CLOSED	CAGE IN MIX POSTION
BOWL HEIGHT NO	OPEN	BOWL/YOKE NOT UP
	CLOSED	BOWL/YOKE FULLY RAISED
BOWL HEIGHT NC	OPEN	BOWL LIFT FULLY RAISED
	CLOSED	READY TO RAISE BOWL
DOWN LIMIT	OPEN	BOWL LIFT FULLY LOWERED
	CLOSED	READY TO LOWER BOWL
BOWL LIFT	OPEN	BOWL AT REST
	2&3-5&6	RAISING BOWL
	2&1-5&4	LOWERING BOWL

SYMBOL DEFINITIONS

- CONTACT-NORMALLY OPEN (N.O.)
- CONTACT-NORMALLY CLOSED (N.C.)
- MOTOR
- FU FUSE
- GND GROUND
- LS LIMIT SWITCH - N.C.
- PB PUSH BUTTON-STOP (N.C.)
- PB PUSH BUTTON-START (N.O.)
- CON CONTACTOR COIL
- T TRANSFORMER
- INSEPARABLE CONNECTION
- SEPARABLE CONNECTION
- HEAVY LINE DENOTES EXTERNAL WIRING
- LIGHT LINE DENOTES FIXED PREWIRING (PRINTED CIRCUIT WIRING OR OTHER).
- DASHED LINE DENOTES OPTIONAL EQUIPMENT OR WIRING

WARNING

ELECTRICAL AND GROUNDING CONNECTIONS MUST COMPLY WITH THE APPLICABLE PORTIONS OF THE NATIONAL ELECTRICAL CODE AND/OR OTHER LOCAL ELECTRICAL CODES.

*L3 ONLY USED ON THREE-PHASE SERVICE CONNECTION

PRINTED IN U.S.A.

Legacy60

WIRING DIAGRAM
200-230/50/60/1
200-230/50/60/3
400-460/50/60/3

HOBART
TROY, OHIO 45374

F-034909

⊕ ADD	⊖ REMOVE		⊗ WAS	
LTR	REVISIONS	ZONE	DATE	CN NO.
A	PRE-RELEASED FOR PROD	---	01/05/04	310141
B	RELEASED FOR PRODUCTION		03/02/04	3100736

NOTES:

1. PRINT ON WHITE PERMANENT SELF-ADHESIVE LABEL STOCK
   IMAGE SIZE 8.75 BY 12.00
   PAPER SIZE 9.00 BY 12.25

REV | FM

DRAWING STATUS

STATUS:
SUPERSEDED BY:
FOR SERVICE USE:

TOLERANCES NOT SPECIFIED:
.XXX DECIMALS (EXCEPT HOLES): ± .030
PUNCHED HOLE TOLERANCES: ±.005
DRILL HOLE TOLERANCES
UP TO .124 DIA. +.003-.001
.125 TO .249 DIA. +.004-.002
.250 TO .624 DIA. +.005-.002
.625 TO 3.000 DIA. +.010-.002
CHAMFERS DESIGNATED BY (C): .020/.040X40°/50°
ANGLES: ±1°

STOCK SIZES-STANDARD COMMERCIAL TOLERANCES APPLY
ALL DIMENSIONS IN INCHES UNLESS OTHERWISE SPECIFIED
DO NOT SCALE DRAWING | REPORT ERRORS IMMEDIATELY
ENGR: ELEC MATL PACK PROD

ANY VENDOR SUPPLYING PARTS UNDER THIS DRAWING AGREES NOT TO REVISE ANY PHYSICAL, DIMENSIONAL, MATERIAL OR PERFORMANCE CHARACTERISTICS OF SUCH PARTS AFTER APPROVAL BY ITW FOOD EQUIPMENT GROUP OF VENDOR'S SAMPLES UNLESS AUTHORIZED IN WRITING BY ITW FOOD EQUIPMENT GROUP.

THIS DOCUMENT CONTAINS PROPRIETARY AND CONFIDENTIAL DATA OF ITW FOOD EQUIPMENT GROUP. NO DISCLOSURE, REPRODUCTION, OR USE OF ANY PART THEREOF MAY BE MADE WITHOUT WRITTEN PERMISSION OF ITW FOOD EQUIPMENT GROUP.

ITW Food Equipment Group

DIAGRAM, WIRING
HL600 MIXER W/RECIPE TIMER

DRAWN BY: C. CATES
DATE: 10/22/03
SCALE: NONE
SIZE: D
DRAWING NO: 0F-034909
SHEET 1 OF 1
REV: B

HOBART

WARRANTY
and
SERVICE CONTRACT
Information

Please use the most convenient way
to register your new Hobart Product.

www.hobartcorp.com/warranty

Fax to 1-937-332-2182

Cut along dotted lines and
mail the attached card(s)

Thank you,
HOBART CORPORATION
PRODUCT SERVICE

SERVICE CONTRACT

That's the protection you get with a Hobart Service Contract. A Hobart Service Contract is full-time protection. That's why it's your best investment--whether your equipment is old, new, or in between. Look at the very real benefits of a Service Contract vs. paying for each service call as it comes:

- **Budget service costs to the penny**—it's a fixed cost for the full year with no surprises, easy budgeting.
- **Get tomorrow's service at today's cost**—you lock in the best price, even if labor and parts costs go up during the term of your contract.
- **Enjoy peace of mind**--you're fully covered, no matter what happens.
- **No charge**--for parts, or labor during regular business hours.
- **We'll write it**--tailored to your exact needs, one machine or several, one location or many.
- **We'll cover it**--Hobart, Vulcan, Adamatic, Baxter, Baker's Aid.
- **Best service**--rated first in the industry according to independent surveys.
- **At your service**--more than 1700 trained field service representatives in over 200 offices nationwide.

CUT HERE AND MAIL THIS CARD

GIVE ME A QUOTE. What would a Hobart Service Contract cost for the following equipment?

COMPANY NAME:

STREET ADDRESS:	CITY:	COUNTY:	STATE:	ZIP:

TELEPHONE NO.	CONTACT

Type of Equipment					
Brand					
Model No.					
Serial No.					
Date Installed					

F-974-A (R9-01)

WARRANTY OF HOBART

WORLD HEADQUARTERS
701 S RIDGE AVENUE
TROY OHIO 45374-0001

Hobart Corporation ("Hobart") warrants new Hobart products and certain products sold by Hobart under other brand names to the original end user ("Owner") when installed within the United States, against defective material and workmanship for one (1) year from the date of original installation. Hobart will, during normal working hours, through one of its Branches or authorized servicing outlets repair or replace, at its option, including service and labor, all parts found to be defective and subject to this warranty.

Certain Hobart products or parts may be warranted for a period other than one (1) year and others may be subject to travel limitations. Certain Hobart parts, expendable by nature and that need to be replaced frequently, may not be covered. Service labor to perform certain adjustments on Hobart products may not be covered. Ask your authorized Hobart representative for information regarding these products and coverage exclusions.

This warranty is conditioned upon Hobart receiving notice of any defect subject to this warranty within thirty (30) days of its discovery by Owner.

This warranty does not apply to damage resulting from fire, water, burglary, accident, abuse, misuse, acts of God, attempted repairs or improper installation by unauthorized persons. Failure to follow use, care, or maintenance instructions in your Instruction Manual may void this warranty.

THIS WARRANTY EXCLUDES ALL ORAL, STATUTORY, EXPRESS OR IMPLIED WARRANTIES WHICH MAY BE APPLICABLE TO HOBART, INCLUDING, BUT NOT LIMITED TO, ANY IMPLIED WARRANTY OF MERCHANTABILITY AND FITNESS FOR PARTICULAR PURPOSE. Hobart shall have no obligation or liability of any kind or character, including any obligation or liability for consequential or special damages arising out of, or with respect to, the product, its sale, operation, use or repair. Hobart neither assumes nor authorizes anyone else to assume for it any obligation or liability in connection with the product, its sale, operation, or use, other than as stated herein.

CUT HERE AND MAIL THIS CARD

MAIL THIS CARD OR FAX TO 1-937-332-2182 IMMEDIATELY AFTER INSTALLATION

WARRANTY REGISTRATION CARD

Please fill out this card to register your new Hobart product
or use our on-line warranty registration

YOUR NAME:

COMPANY NAME:	LOCATION NAME/STORE NUMBER:

STREET ADDRESS:

CITY:	STATE:	ZIP:

PHONE NUMBER:	E-MAIL:

MODEL: SERIAL NO: DATE OF INSTALLTION:

F-974-B (R9-01)

MIXER
HOBART HL 600
PO 4500184262
ITEM 001

MOTOR CHARACTERISTICS & PERFORMANCE DATA

ITEM___

SHEET___OF___

(IF EQUIPMENT CONTAINS MULTIPLE MOTORS, GIVE DATA FOR EACH SEPARATELY)

MANUFACTURER BALDOR

MASTER DRAWING ML-134284

CERTIFICATION DATA 873943-2

AUXILIARY

EQUIPMENT MODEL NO. HL 600

QUANTITY 1

RATING (HP, VOLTS, PHASE) 380-460V/3Φ 2.7HP

INSULATION CLASS F

WEIGHT 78 LBS.

CYCLES 50/60

DESIGN SWITCHED RELUCTANCE

TORQUE-STARTING 27.5 FL LBS.

-FULL LOAD 10.5 FL. LBS

AMPERS-STARTING 18 AMPS

-FULL LOAD 6.5 AMPS

POWER FACTOR NA

-F.L.

-3/4

-1/2

-LOCKED

ENCLOSURE OPEN

SERVICE

DUTY CONT

TYPE

AMBIENT DEGREE C 50°C

F.L. KW 2.7 KW

MOTOR FRAME 184

EQUIPMENT SPECIFICATION

EFFICIENCY 75%

SYMBOL NO.

MIXER
HOBART HL 600
P0450018426 2
ITEM 001

CONTROLLER DATA

ITEM___

SHEET___OF___

MANUFACTURER BALDOR MOTORS & DRIVES

MASTER DRAWING 874029-2

CERTIFICATION DATA 874029-2

RATING (HP, VOLTS, PHASE 380-460V / 3φ 2.7HP

SIZE 12 1/4" X 8" X 6 3/4"

OPERATION CONT.

TYPE SWITCHED RELUCTANCE

FUCTION VARIABLE FREQUENCY MOTOR DRIVE

DUTY CONT.

LOW VOLTAGE FEATURE NO

OVERLOAD RELAY

HEATER CATALOG NO. ELECTRONIC

TYPE

EMERGENCY RUN (YES/NO)

AMBIENT DEGREE C 40° C

ENCLOSURE OPEN

WEIGHT 13.25 LBS

EQUIPMENT SPECIFICATION

LOCATION

QUANTITY 1

SYMBOL NO.

HOBART

CATALOG OF REPLACEMENT PARTS

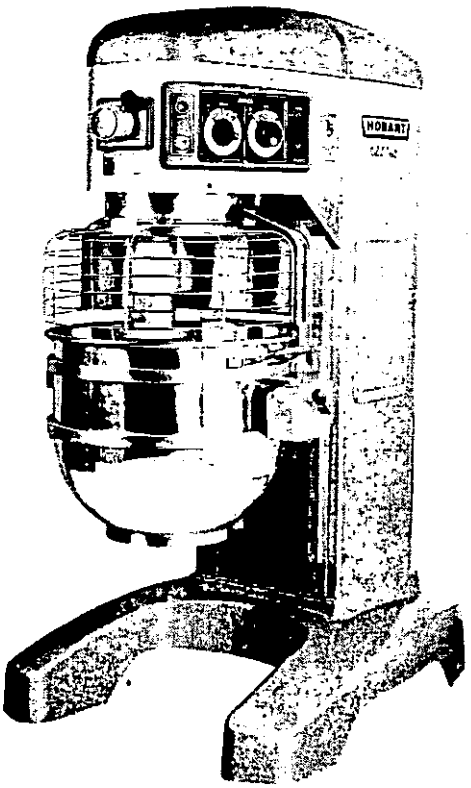

LEGACY MIXER

HL600	ML-134284
HL661	ML-134285
HL662	ML-134286
HL600C	ML-134287

PRIOR MLS COVERED IN THIS CATALOG

HL600	ML-134145
HL661	ML-134218
HL662	ML-134219
HL600C	ML-134223

A product of HOBART CORPORATION 701 S. RIDGE AVENUE TROY, OHIO 45374-0001

FORM 43069 Rev. A (April 2004)

 © HOBART CORPORATION

Table of Contents

Page	Description
5	Control Panel
7	Electrical Components
9	Attachment Hub
11	Base and Pedestal
13	Bowl Support
15	Transmission Case and Motor
17	Transmission
19	Planetary
21	Bowl Guard
23	Agitators and Accessories

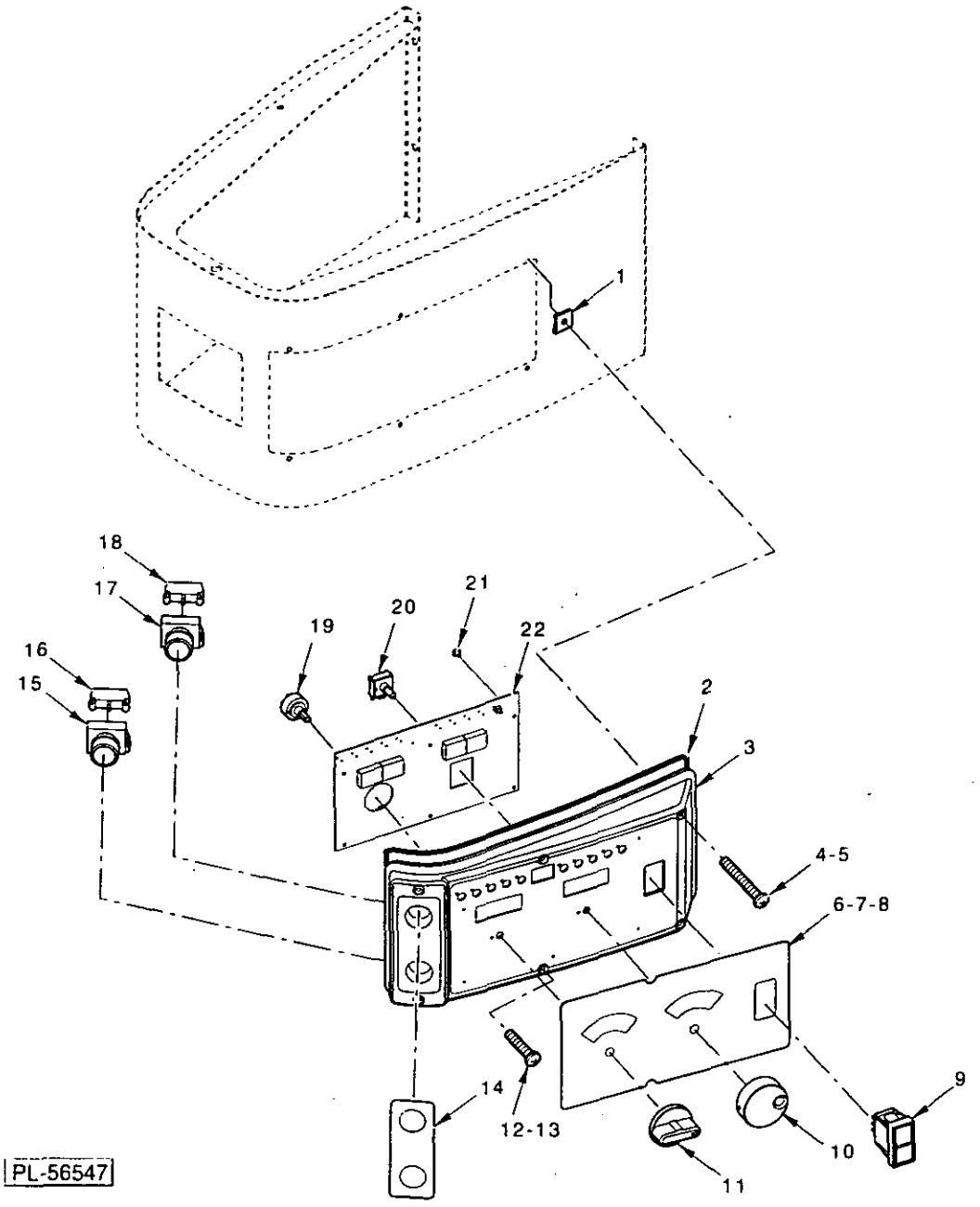

CONTROL PANEL

CONTROL PANEL

ILLUS. PL-56547	PART NO.	NAME OF PART	AMT.
1	00-874338	Fastener – Self-Retaining	6
2	00-875814	Seal – Control Panel	1
3	00-873945	Panel – Control	1
4	SC-128-40	Mach. Screw 8-32 x 2¼ Phil. Oval Hd. (SST)	2
5	00-874468	Extension – Screw (ML-134223 & ML-134287)	2
6	00-874195	Overlay (HL600) (ML-134145, ML-134223, ML-134284, & ML-134287)	1
7	00-875568	Overlay (HL661) (ML-134218 & ML-134285)	1
8	00-875569	Overlay (HL662) (ML-134219 & ML-134286)	1
9	00-087711-330-1	Switch – Rocker (Bowl Lift)	1
*10	00-875724	Knob – Timer	1
*11	00-874630	Knob – Speed Selector	1
12	SC-128-39	Mach. Screw 8-32 x 1½ Phil. Oval Hd. (SST)	4
13	SC-124-78	Mach. Screw 8-32 x 1½ Hex Flat Hd. (SST) (ML-134223 & ML-134287)	6
14	00-875451	Label (Mix/Stop)	1
15	00-478752-00008	Switch – Operator (Start)	1
16	00-087711-322-3	Block – Contact (Start)	1
17	00-478752-00006	Switch – Operator (Stop)	1
18	00-087711-322-4	Block – Contact (Stop)	1
*19	00-874631	Potentiometer Assy. (Speed Selector)	1
*20	00-875723	Encoder Assy. (Time Selector)	1
21	SD-039-23	Self-Tapping Screw 6-32 x ¼ Hex Washer Hd., Type RL	5
**22	00-875768	PCB Assy. (Timer Board)	1
	00-874675	Kit – Timer Control (ML-134145, ML-134218, ML-134219, & ML-143223)	1

* When replacing this item on prior ML's, be sure to order the matching knob or component.
** When replacing this item on prior ML's, order kit 00-874675.

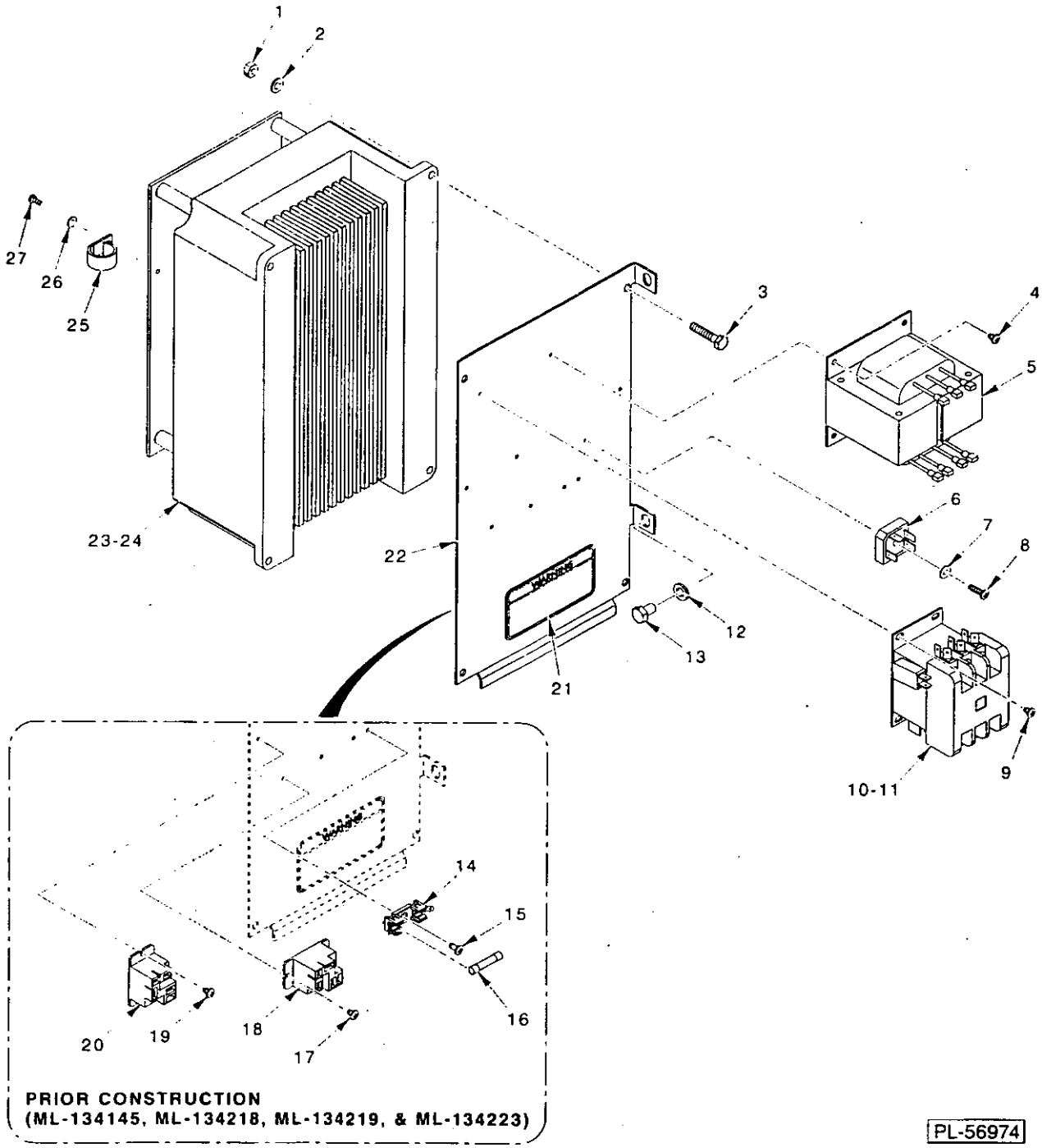

ELECTRICAL COMPONENTS

ELECTRICAL COMPONENTS

ILLUS. PL-56974	PART NO.	NAME OF PART	AMT.
1	NS-013-01	Nut 1/4-20 Hex	4
2	WL-003-38	Lockwasher 1/4 Helical	4
3	SC-036-09	Cap Screw 1/4-20 x 1 1/4 Hex Hd.	4
4	SD-015-39	Self-Tapping Screw 8-32 x 1/4 Phil. Pan Hd., Type TT	2
5	00-294500-050-1	Transformer	1
6	00-042159	Rectifier – Bridge (100 V., 35 Amp.)	1
7	WS-019-41	Washer (SST)	1
8	SD-015-42	Self-Tapping Screw 8-32 x 5/8 Phil. Pan Hd., Type TT	1
9	SD-015-39	Self-Tapping Screw 8-32 x 1/4 Phil. Pan Hd., Type TT	2
*10	00-087713-105-1	Contactor (3P, 30 Amp./Aux.)	
11	00-087713-101-3	Contactor (3P, 30 Amp./Aux.)	1
12	WL-003-44	Lockwasher 5/16 Helical	2
13	SC-041-09	Cap Screw 5/16-18 x 1/2 Hex Hd. (SST)	2
*14	00-294436-00003	Block – Fuse	1
*15	SD-015-40	Self-Tapping Screw 8-32 x 3/8 Phil. Pan Hd., Type TT	1
*16	FE-017-03	Fuse (125 V., 2 Amp.)	1
*17	SD-015-39	Self-Tapping Screw 8-32 x 1/4 Phil. Pan Hd., Type TT	2
*18	00-087714-065-1	Relay SPST, Flange Mounting (24 VAC)	1
*19	SD-015-39	Self-Tapping Screw 8-32 x 1/4 Phil. Pan Hd., Type TT	2
*20	00-087714-065-1	Relay SPST, Flange Mounting (24 VAC)	1
21	00-438131-00174	Label – Warning	1
22	00-874421	Plate – Drive Control Mounting	1
23	00-874029	Drive – Switch Reluctance (200-240/50/60/31/1)	1
24	00-874029-00002	Drive – Switch Reluctance (380-460/50/60/3)	1
25	00-294677-00003	Clamp	2
26	WS-023-15	Washer	2
27	SC-018-29	Mach. Screw 6-32 x 3/8 Phil. Pan Hd.	2
	00-875579	Panel Assy. – SR Drive Assy. (200-240/50/60/3/1)	1
	00-875579-00002	Panel Assy. – SR Drive (380-460/50/60/3)	1

* Only used on ML-134145, ML-134218, ML-134219, & ML-134223.

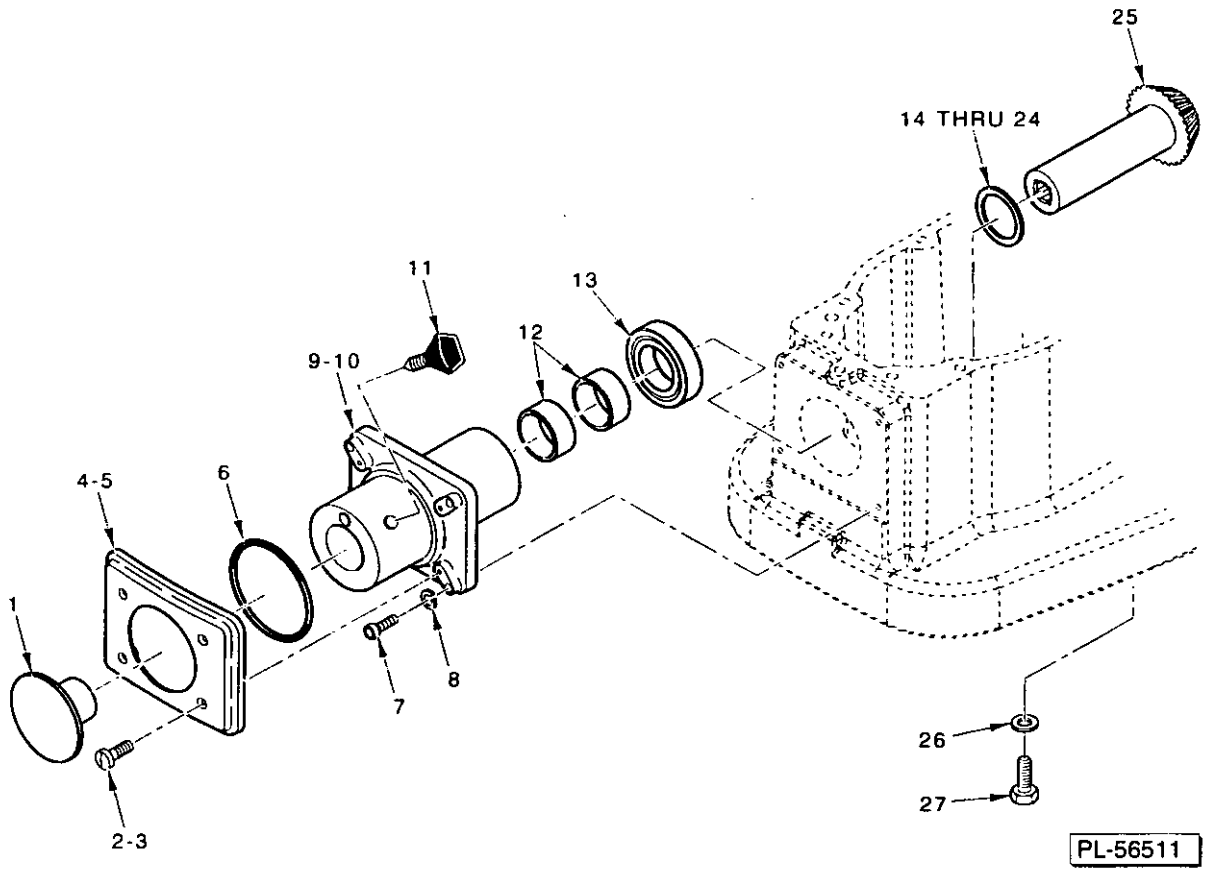

ATTACHMENT HUB

ATTACHMENT HUB

ILLUS. PL-56511	PART NO.	NAME OF PART	AMT.
1	00-114824-00001	Plug – Attachment	1
2	SC-128-37	Mach. Screw 8-32 x 5/8 Phil. Oval Hd.	4
3	SC-128-56	Mach. Screw 8-32 x 5/8 Hex Flat Hd. (SST) (ML-134223 & ML-134287)	4
4	00-873973-00002	Panel – Front	1
5	00-875813	Seal – Attachment Hub Cover	1
6	OR-001-09	O-Ring	1
7	SC-040-09	Cap Screw 1/4-20 x 1 1/4 Hex Soc. Hd.	4
8	WL-003-38	Lockwasher 1/4 Helical	4
9	00-874290-00002	Hub – Attachment	1
10	00-508462	Sealer – Permatex (11 oz.)	1
11	00-108197-00001	Thumb Screw	1
12	BN-002-06	Bearing – Needle	2
13	BB-013-03	Ball Bearing	1
14	00-061920-00001	Washer – Thrust (0.076 Thk.)	AR
15	00-061920-00002	Washer – Thrust (0.079 Thk.)	AR
16	00-061920-00003	Washer – Thrust (0.082 Thk.)	AR
17	00-061920-00004	Washer – Thrust (0.085 Thk.)	AR
18	00-061920-00005	Washer – Thrust (0.088 Thk.)	AR
19	00-061920-00006	Washer – Thrust (0.091 Thk.)	AR
20	00-061920-00007	Washer – Thrust (0.094 Thk.)	AR
21	00-061920-00008	Washer – Thrust (0.097 Thk.)	AR
22	00-061920-00009	Washer – Thrust (0.100 Thk.)	AR
23	00-061920-00010	Washer – Thrust (0.103 Thk.)	AR
24	00-061920-00011	Washer – Thrust (0.106 Thk.)	AR
25	00-874277	Pinion – Bevel (24T)	1
26	WS-021-21	Washer	1
27	SC-041-42	Cap Screw 1/2-20 x 1 Hex Hd.	1

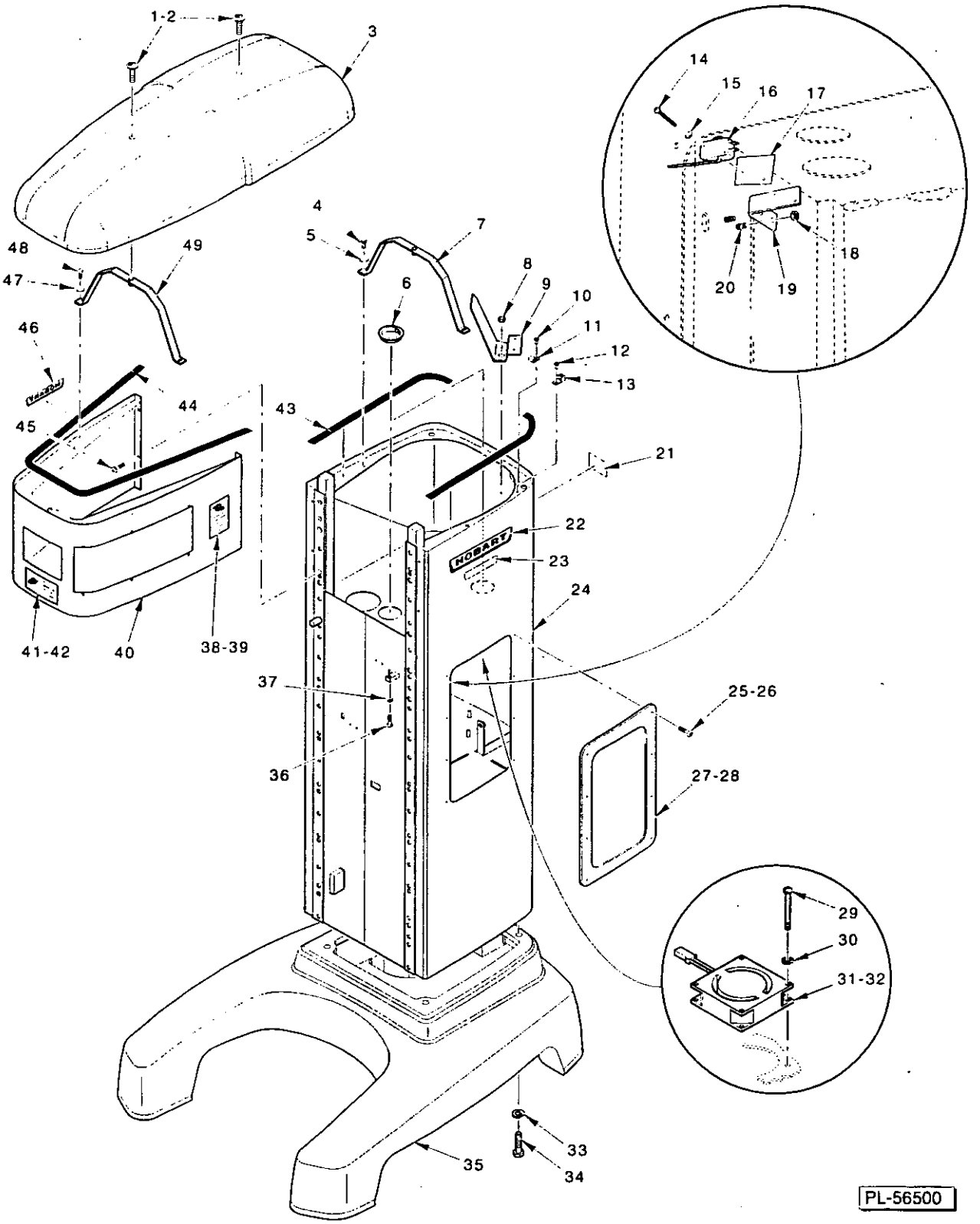

BASE AND PEDESTAL

BASE AND PEDESTAL

ILLUS. PL-56500	PART NO.	NAME OF PART	AMT.
1	SC-120-30	Mach. Screw 1/4-20 x 2 Phil. Oval Hd.	2
2	SC-122-02	Mach. Screw 1/4-20 x 2 Hex Flat Hd. (SST) (ML-134223 & ML-134287)	2
3	00-873882	Cover – Top	1
4	SC-036-06	Cap Screw 1/4-20 x 1 Hex Hd.	2
5	WS-003-43	Washer	2
6	FE-026-28	Bushing – Electric Snap	2
7	00-874222	Rear Strap Assy. – Rear	1
8	FE-021-13	Bushing – Electric Split	1
9	00-874473	Shield – Wire	1
10	SD-029-02	Self-Tapping Screw 10-24 x 1/2 Slotted Pan Hd., Type F	1
11	00-078752-00003	Clamp – Cable	1
12	SD-029-02	Self-Tapping Screw 10-24 x 1/2 Slotted Pan Hd., Type F	1
13	00-118544-00001	Lug – Solderless	1
14	SC-060-40	Mach. Screw 4-40 x 5/8 Slotted Rd. Hd.	4
15	WL-003-03	Lockwasher #4 Helical	4
16	00-087711-00248	Switch – Bowl Height	2
17	00-439892	Insulator – Switch	2
18	NS-044-09	Nut Assy. 10-24 Hex KEPS	4
19	00-874109	Bracket – Bowl Travel Switch	2
20	00-113631-00006	Stud – Self-Clinching	4
21	00-438131-061-1	Label – Warning (California)	1
22	00-874401	Logo – Hobart	1
23	00-874379	Label – Legacy	1
24	00-873894-00003	Pedestal Assy.	1
25	SD-009-41	Self-Tapping Screw 8-32 x 3/8 Slotted Pan Hd., Type F (SST)	8
26	SC-122-76	Mach. Screw 8-32 x 1/2 Hex Button Hd. (SST) (ML-134223 & ML-134287)	8
27	00-874238-00001	Cover – Side (Incls. Item 28)	1
28	00-875815	Seal – Side Panel	2
29	SC-110-48	Mach. Screw 6-32 x 2 Slotted Pan Hd.	2
30	WL-003-09	Lockwasher #6 Helical	2
31	00-874535	Fan – Cooling (24 VDC)	1
32	00-875676	Fan – Cooling (220 VAC) (ML-134145, ML-134218, ML-134219, & ML-134223)	1
33	WL-004-11	Lockwasher 1/2 Helical	4
34	SC-037-06	Cap Screw 1/2-13 x 2 3/4 Hex Hd.	4
35	00-873950-00002	Base	1
36	SC-041-13	Cap Screw 5/16-18 x 1 Hex Hd. (SST)	1
37	NS-013-14	Nut 5/16-18 Hex	1
38	00-438131-00001	Plate – Caution	1
39	RS-003-04	Rivet	1
40	00-873897-00001	Wrapper – Transmission	1
41	00-438131-00002	Plate – Warning	1
42	RS-003-04	Rivet	1
43	00-874512-00001	Seal – Top Cover (Rear)	2
44	00-874512-00002	Seal – Top Cover	1
45	SD-039-06	Self-Tapping Screw 1/4-20 x 3/4 Hex Washer Hd., Type F	4
46	00-118365	Decal – Hobart	1
47	WS-003-43	Washer	2
48	SC-036-06	Cap Screw 1/4-20 x 1 Hex Hd.	2
49	00-874223	Strap Assy. – Front	1
	FE-006-28	Nipple – Conduit 3/4 (ML-134223)	1
	FE-006-06	Lock Nut – Electric 3/4 (ML-134223)	1
	SD-015-40	Self-Tapping Screw 8-32 x 3/8 Phil. Pan Hd., Type TT (ML-134223)	1
	SC-121-90	Mach. Screw 6-32 x 3/8 Hex Button Hd. (SST) (ML-134223)	2

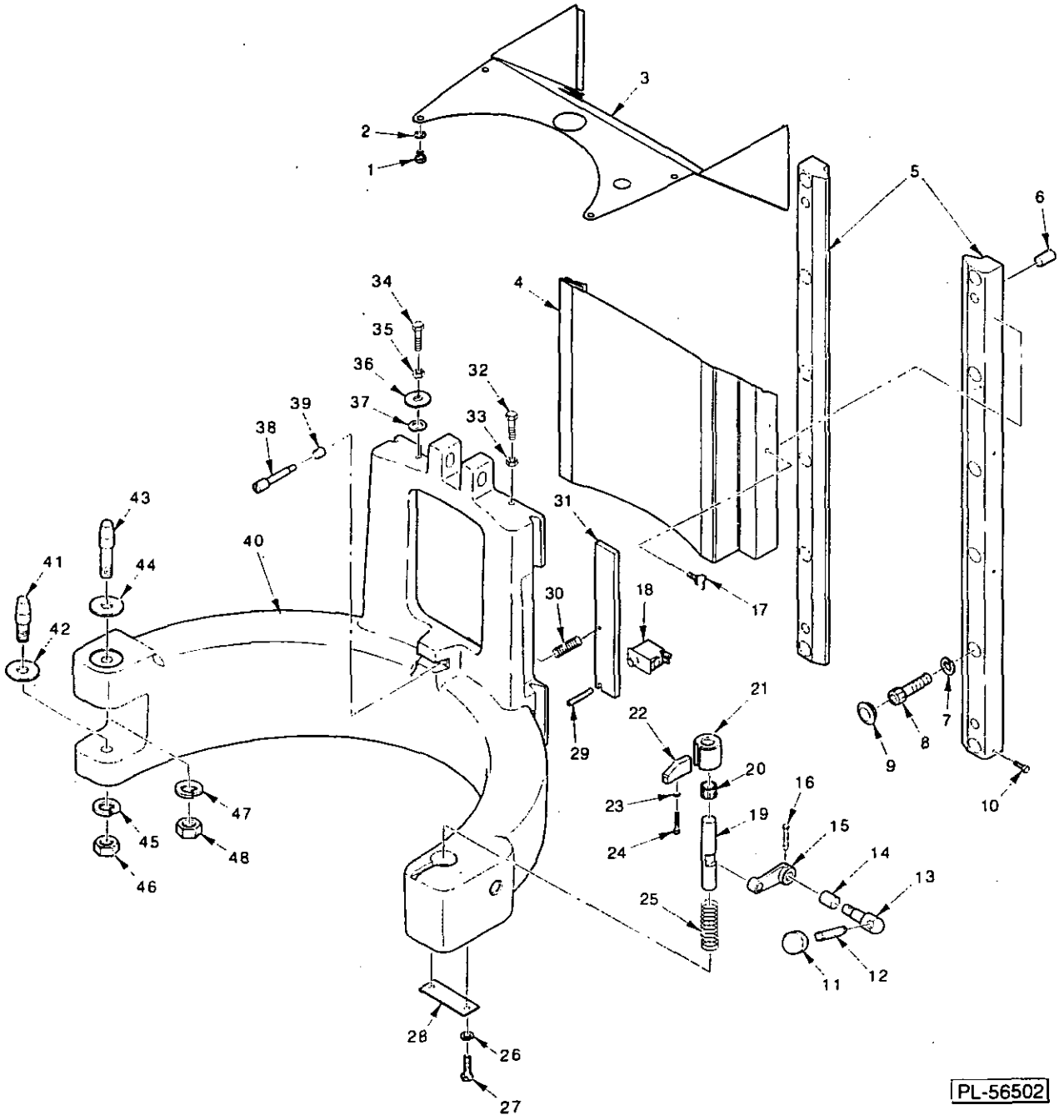

BOWL SUPPORT

BOWL SUPPORT

ILLUS. PL-56502	PART NO.	NAME OF PART	AMT.
1	SC-062-20	Cap Screw 1/4-20 x 3/8 Hex Hd.	4
2	WL-003-38	Lockwasher 1/4 Helical	4
3	00-874357	Cover – Apron	1
4	00-874324	Apron – Lower	1
5	00-873885	Slideway	2
6	00-011800-00143	Dowel	2
7	WL-004-02	Lockwasher 3/8 Helical	12
8	SC-092-62	Cap Screw 3/8-16 x 1 1/2 Hex Soc. Hd.	12
9	PB-004-90	Cap	12
10	SC-128-48	Mach. Screw 10-24 x 1/4 Hex Hd. (ML-134223 & ML-134287)	6
11	00-875356	Handle – Lift Lever	1
12	00-874197	Shaft – Bowl Pin Handle	1
13	00-874220	Handle – Bowl Pin	1
14	00-874138	Bushing – Bowl Pin Cam	1
15	00-874218	Clevis – Bowl Lock	1
16	00-874338	Detent – Clevis Pin	1
17	00-070641-00009	Thumb Screw (All Except ML-134223 & ML-134287)	2
18	00-087711-00338	Switch – Panel Front	1
19	00-874219	Pin – Bowl (RH)	1
20	00-874499	Bushing – Bowl Lock Pin	2
21	00-874506	Button – Rest Bowl	1
22	00-874113	Ramp – Wear	1
23	WL-003-12	Washer	1
24	SC-040-92	Cap Screw 8-32 x 1 Hex Soc. Hd.	1
25	00-874198	Spring – Bowl Pin	1
26	WL-003-38	Lockwasher 1/4 Helical	2
27	SC-036-14	Cap Screw 1/4-20 x 1/2 Hex Hd.	2
28	00-874199	Strap – Spring Retaining	1
29	RP-005-12	Roll Pin 0.187 x 1.250 Lg.	1
30	00-874496	Spring – Pushplate	1
31	00-874464	Plate – Push	1
32	SC-041-13	Cap Screw 5/16-18 x 1 Hex Hd. (SST)	1
33	NS-013-14	Nut 5/16-18 Hex	1
34	SC-041-13	Cap Screw 5/16-18 x 1 Hex Hd. (SST)	1
35	NS-013-14	Nut 5/16-18 Hex	1
36	WS-005-33	Washer (SST)	1
37	WS-006-36	Washer	3
38	00-874458	Plunger – Bowl-In	1
39	00-874492	Bushing – Bowl-In	1
40	00-873844-00002	Yoke	1
41	00-873846	Pin – Bowl	1
42	00-874084	Bushing – Bowl Support	1
43	00-873845	Pin – Bowl	1
44	00-874084	Bushing – Bowl Support	1
45	WL-004-12	Lockwasher 1/2 Helical	1
46	NS-013-30	Nut 1/2-13 Hex	1
47	WL-004-12	Lockwasher 1/2 Helical	1
48	NS-013-30	Nut 1/2-13 Hex	1
	00-874139	Bowl Lock Handle Assy. (Incls. Items 11, 12, & 13)	1
	00-874139-00002	Bowl Lock Handle Assy. (Welded) (ML-134223 & ML-134287)	1

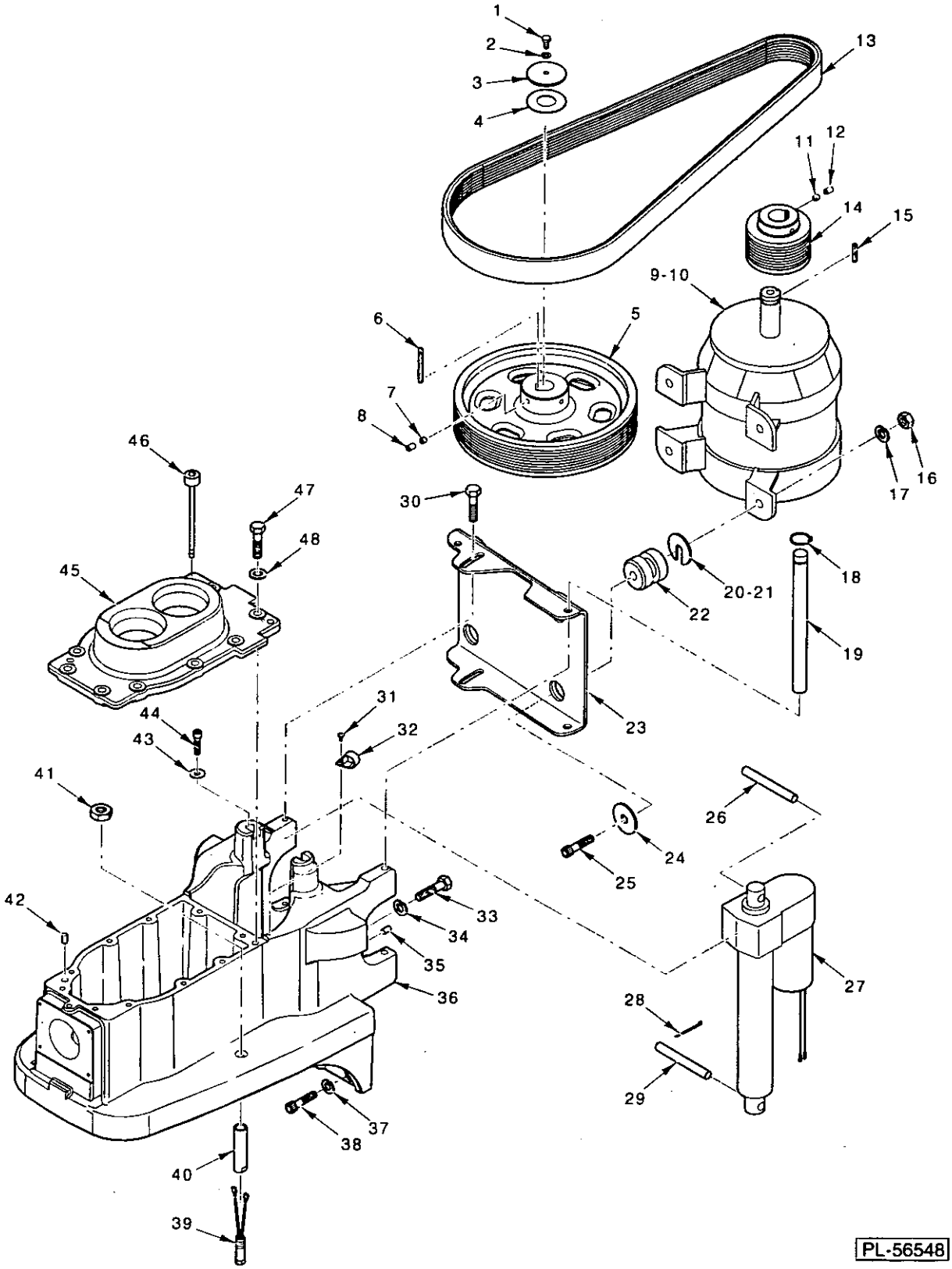

TRANSMISSION CASE AND MOTOR

TRANSMISSION CASE AND MOTOR

ILLUS. PL-56548	PART NO.	NAME OF PART	AMT.
1	SC-036-14	Cap Screw 1/4-20 x 1/2 Hex Hd.	1
2	WL-003-38	Lockwasher 1/4 Helical	1
3	00-874345-00003	Washer – Special	1
4	00-874345-00004	Washer – Special	1
5	00-874000	Sheave – Driven	1
6	00-012430-00177	Key 1/4 x 1/4 x 2 1/2	1
7	SC-047-31	Set Screw 5/16-18 x 5/16 Hex Hdls., Cup Pt.	2
8	SC-047-34	Set Screw 5/16-18 x 1/2 Hex Hdls., Cup Pt.	2
9	00-873943-00001	Motor – Switch Reluctance (200-240/50/60/3/1)	1
10	00-873943-00002	Motor – Switch Reluctance (380-460/50/60/3)	1
11	SC-047-31	Set Screw 5/16-18 x 5/16 Hex Hdls., Cup Pt.	2
12	SC-047-34	Set Screw 5/16-18 x 1/2 Hex Hdls., Cup Pt.	2
13	00-873921	Belt	1
14	00-873999	Sheave – Drive	1
15	00-012430-00163	Key 1/4 x 1/4 x 1 3/4	1
16	NS-013-30	Nut 1/2-13 Hex	4
17	WL-004-12	Lockwasher 1/2 Helical	4
18	RR-004-19	Retaining Ring	2
19	00-874241	Pin – Pivot Motor Bracket	1
20	00-874373-00001	Shim – Motor (0.059)	AR
21	00-874345-00001	Washer	AR
22	00-874346	Isolator	4
23	00-874349	Plate – Motor Assy.	1
24	00-874345-00001	Washer	4
25	SC-087-54	Cap Screw 1/2-13 x 3 1/4 Hex Soc. Hd.	4
26	00-874315	Pin – Actuator (Upper)	1
27	00-874057	Actuator (Bowl Lift)	1
28	PC-003-50	Cotter Pin 7/64 x 1 Lg.	1
29	00-874117	Pin – Clevis	1
30	SC-123-50	Cap Screw 3/8-16 x 1 Hex Washer Hd.	2
31	SC-018-62	Mach. Screw 10-24 x 3/8	1
32	00-294677-00003	Clamp	1
33	SC-062-67	Cap Screw 1/2-13 x 2 1/4 Hex Hd.	2
34	WL-004-11	Lockwasher 1/2 Helical	2
35	00-011800-00221	Dowel	2
36	00-873996-00002	Case – Transmission	1
37	WL-004-11	Lockwasher 1/2 Helical	2
38	SC-040-36	Cap Screw 1/2-13 x 1 3/4 Soc. Hex Hd.	2
39	00-874958-00001	Switch – Reed & Extension	1
40	00-874128	Extension – Bowl Guard Switch (Bowl Guard)	1
41	NS-017-46	Nut – Jam 3/4-10 Hex	1
42	00-011800-00224	Dowel	2
43	WS-006-36	Washer	2
44	SC-040-16	Cap Screw 5/16-18 x 1 Hex Soc. Hd.	2
45	00-873916-00002	Cover – Transmission	1
46	00-874131	Dipstick	1
47	SC-062-48	Cap Screw 3/8-16 x 1 1/8 Hex Hd.	10
48	WL-004-04	Lockwasher 3/8 Helical	10

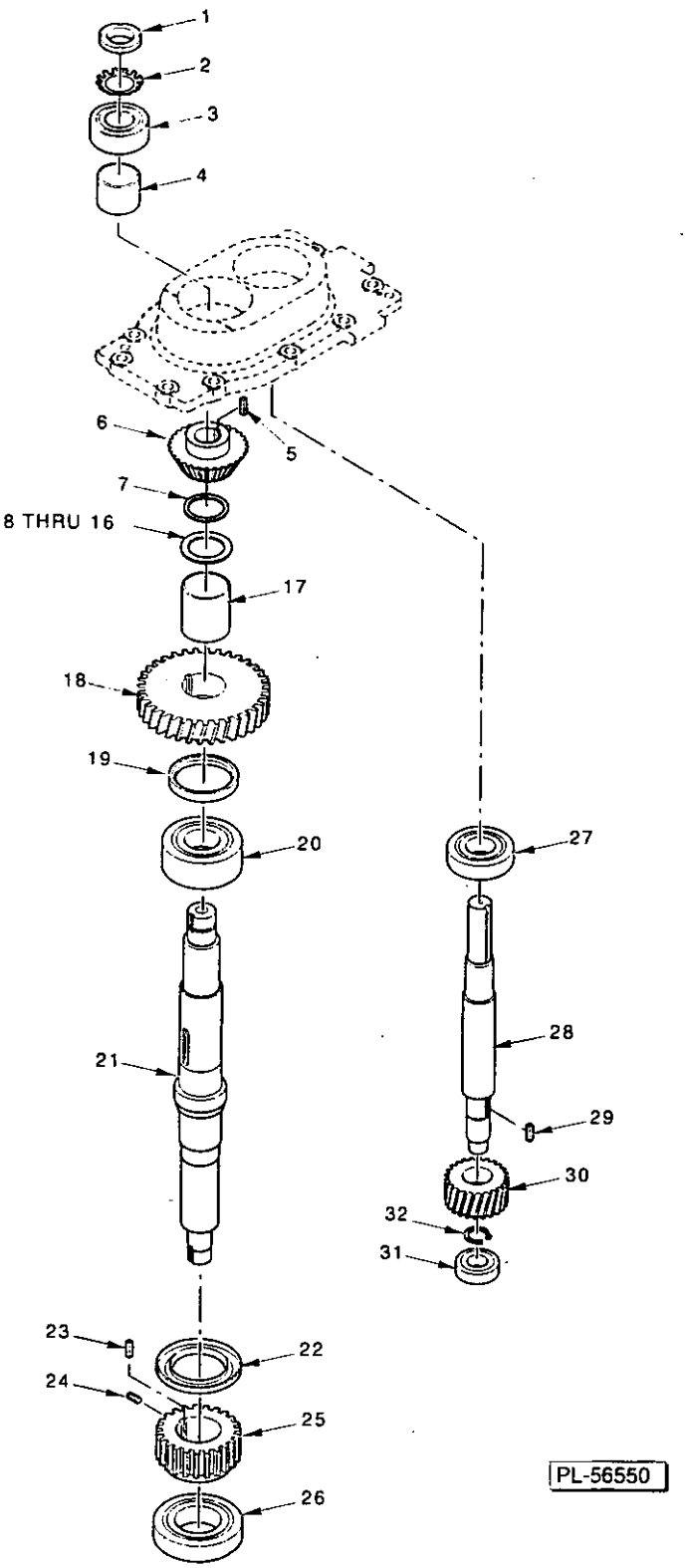

TRANSMISSION

TRANSMISSION

ILLUS. PL-56550	PART NO.	NAME OF PART	AMT.
1	NS-034-07	Lock Nut	1
2	WL-017-07	Lockwasher – Bearing 1.500 x 1.953	1
3	BB-021-35	Ball Bearing (SKF-5206 A-2RS/C3/HT51)	1
4	00-874293	Spacer (1.505 I.D.)	1
5	00-875419-00071	Key 5/16 x 5/16 x 1 5/8	1
6	00-874282	Gear – Bevel (30T)	1
7	00-874384	Spacer – Gear	1
8	00-874283-00001	Shim – Gear	AR
9	00-874283-00002	Shim – Gear	AR
10	00-874283-00003	Shim – Gear	AR
11	00-874283-00004	Shim – Gear	AR
12	00-874283-00005	Shim – Gear	AR
13	00-874283-00006	Shim – Gear	AR
14	00-874283-00007	Shim – Gear	AR
15	00-874283-00008	Shim – Gear	AR
16	00-874283-00009	Shim – Gear	AR
17	00-874294	Spacer (1.755 I.D.)	1
18	00-873914	Gear – Drive	1
19	00-873922	Spacer – Planetary Shaft	1
20	BB-009-30	Ball Bearing	1
21	00-873908	Shaft – Planetary	1
22	00-873939	Seal	1
23	00-875419-00075	Key 5/16 x 5/16 x 1 1/16	1
24	SC-047-12	Set Screw 1/4-20 x 3/8 Soc. Hdls., Knife Cup Pt.	1
25	00-873912	Gear – Sun	1
26	BB-007-01	Ball Bearing	1
27	BB-006-36	Ball Bearing	1
28	00-873913	Shaft – Input	1
29	00-012430-00048	Key 3/16 x 3/16 x 3/4	1
30	00-873915	Gear – Pinion	1
31	BB-007-14	Ball Bearing	1
32	RR-009-07	Retaining Ring	1

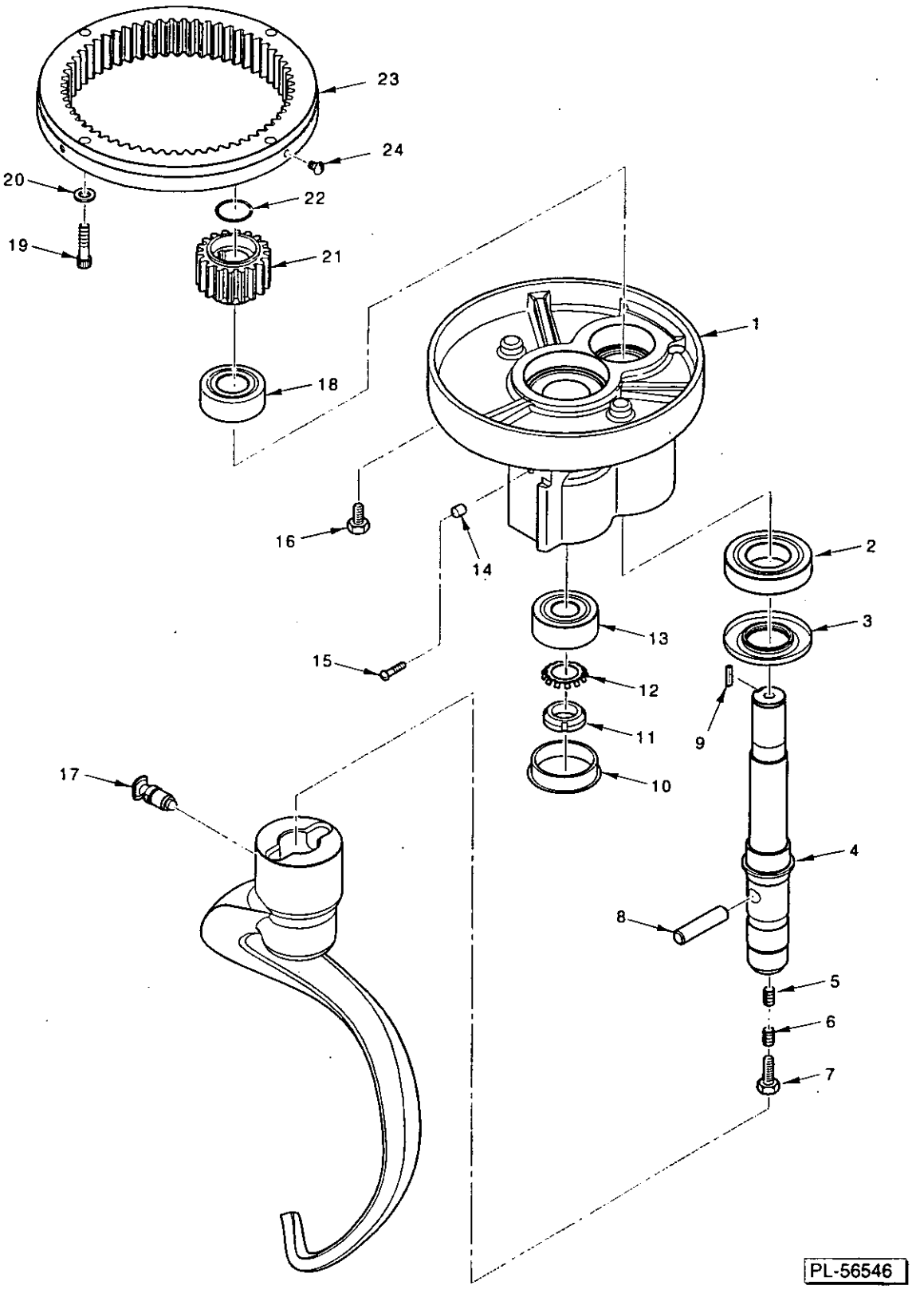

PLANETARY

PLANETARY

ILLUS. PL-56546	PART NO.	NAME OF PART	AMT.
1	00-873995-00002	Planetary	1
2	BB-007-01	Ball Bearing	1
3	00-292288	Seal	1
4	00-873923	Shaft – Agitator	1
5	00-007744	Set Screw – Hdls., Cone Pt.	1
6	SC-047-41	Set Screw 3/8-16 x 3/8 Soc. Hdls., Cup Pt.	1
7	00-064723	Plug – Agitator Shaft	1
8	00-873953	Pin – Agitator Shaft	1
9	00-012430-00154	Key 1/4 x 1/4 1 3/8	1
10	00-874291	Plug – Planetary (Plastic)	1
11	NS-034-06	Lock Nut	1
12	WL-012-06	Lockwasher – Bearing 0.989 x 1.719	1
13	BB-021-52	Ball Bearing	1
14	00-874181	Spacer – Scraper Arm	1
15	SC-021-54	Mach. Screw 5/16-18 x 7/8 Slotted Rd. Hd. (SST)	1
16	SC-041-26	Cap Screw 3/8-16 x 1/2 Hex Hd. (SST)	2
17	00-874145	Plunger Assy.	1
18	BB-021-35	Ball Bearing	1
19	SC-040-23	Cap Screw 3/8-16 x 1 1/4 Hex Soc. Hd.	4
20	WL-019-92	Lockwasher 3/8 Helical	4
21	00-024270	Pinion – Internal (18T)	1
22	RR-005-08	Retaining Ring	1
23	00-437692	Gear – Internal	1
24	SC-021-37	Mach. Screw 1/4-20 x 3/8 Slotted Rd. Hd. (SST)	3

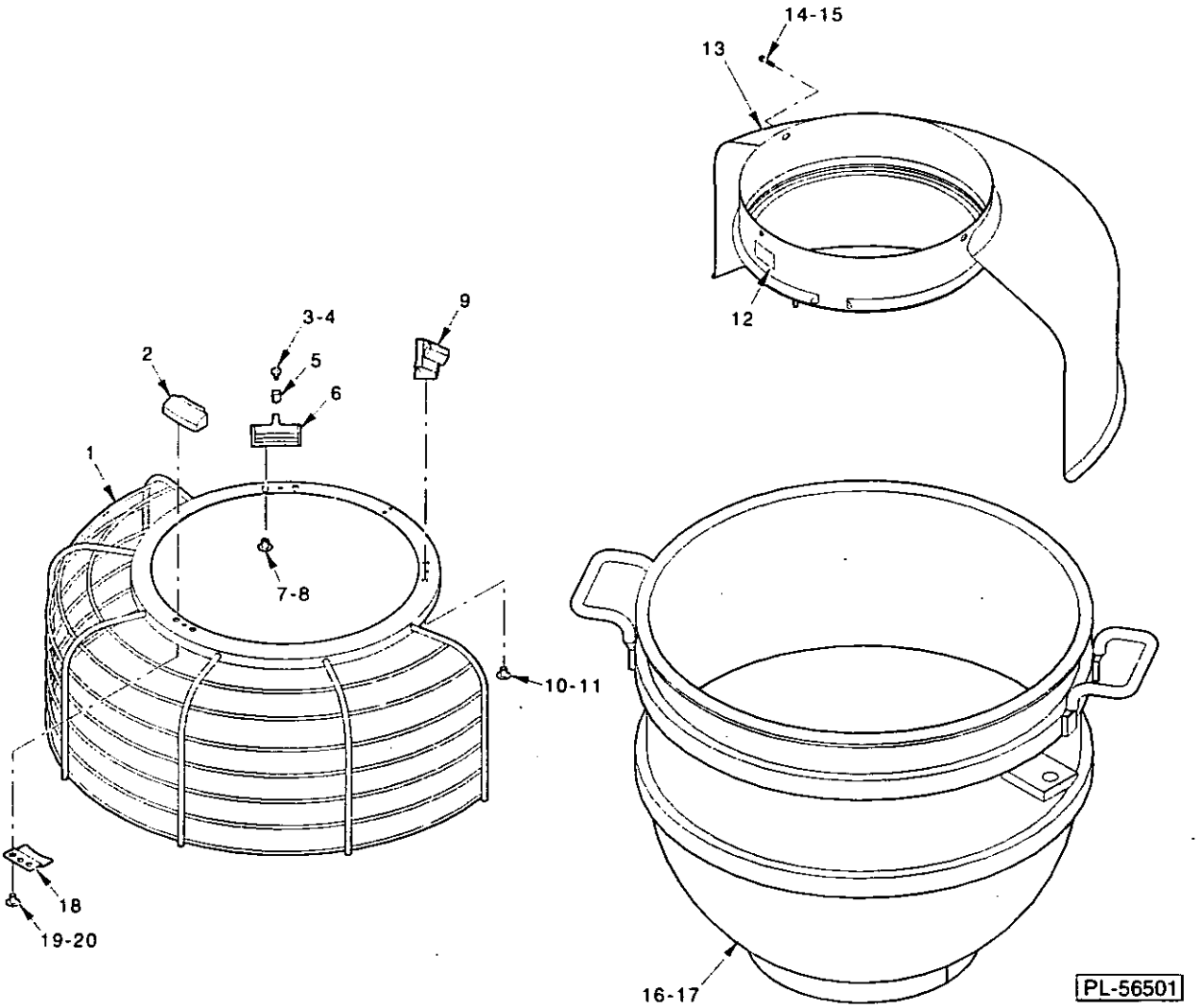

BOWL GUARD

BOWL GUARD

ILLUS. PL-56501	PART NO.	NAME OF PART	AMT.
1	00-874124	Wire Cage	1
2	00-874126	Shoe – Front	1
3	SC-123-07	Mach. Screw 8-32 x 1/2 Slotted Truss Hd.	1
4	SC-122-76	Mach. Screw 8-32 x 1/2 Hex Button Hd. (ML-134223 & ML-134287)	1
5	00-437720	Key – Shoe	1
6	00-437433-00003	Shoes – Adjustable	1
7	SC-122-45	Mach. Screw 1/4-20 x 3/8 Slotted Truss Hd.	2
8	SC-122-52	Mach. Screw 1/4-20 x 3/8 Hex Button Hd. (SST) (ML-134223 & ML-134287)	2
9	00-874127	Shoe – Fixed	1
10	SC-122-45	Mach. Screw 1/4-20 x 3/8 Slotted Truss Hd.	2
11	SC-122-52	Mach. Screw 1/4-20 x 3/8 Hex Button Hd. (SST) (ML-134223 & ML-134287)	2
12	00-875726	Label – Cage	1
13	00-874123	Guard – Splash & Drip	1
14	SC-021-37	Mach. Screw 1/4-20 x 3/8 Slotted Rd. Hd. (SST)	3
15	SC-122-52	Mach. Screw 1/4-20 x 3/8 Hex Button Hd. (SST) (ML-134223 & ML-134287)	3
16	00-875603	Bowl Assy. (60 Quart) (Packaged)	1
17	00-875604	Bowl Assy. (40 Quart) (Packaged) (Not Shown)	1
18	00-874168	Stop – Cage	1
19	SC-122-45	Mach. Screw 1/4-20 x 3/8 Slotted Truss Hd.	2
20	SC-122-52	Mach. Screw 1/4-20 x 3/8 Hex Button Hd. (SST) (ML-134223 & ML-134287)	2
	00-512987	Adhesive	AR
	00-874125	Wire Cage Assy. (Incls. Items 1, 2, 3, 5, 6, 7, 9, 10, 17, & 18)	1
	00-874125-00002	Wire Cage Assy. (Incls. Items 1, 2, 4, 5, 6, 8, 9, 11, 17, 19 & Adhesive) (ML-134223 & ML-134287)	1

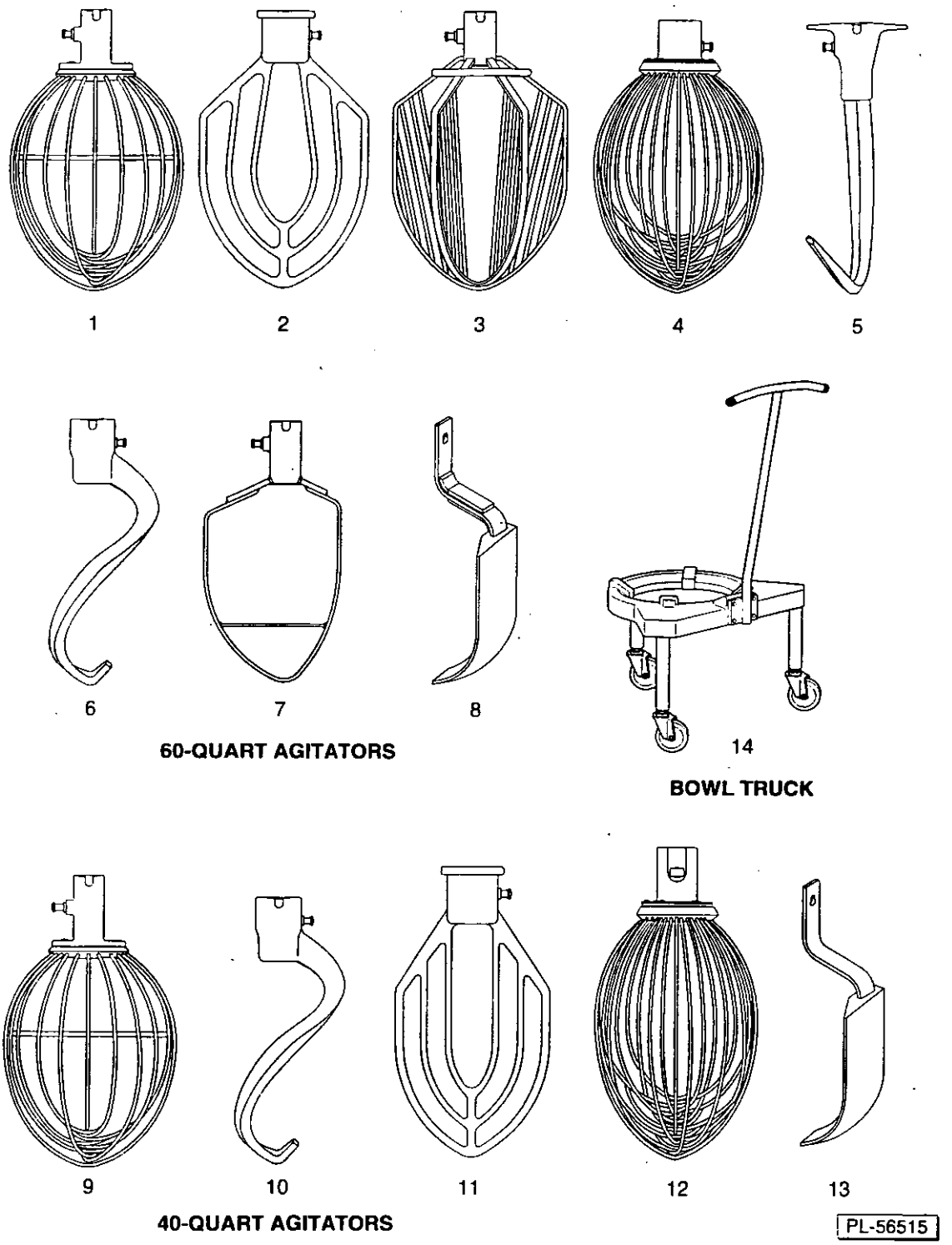

AGITATORS AND ACCESSORIES

AGITATORS AND ACCESSORIES

ILLUS. PL-56515	PART NO.	NAME OF PART	AMT.
1	00-874271	"I" Wire Whip (60 Quart) (Packaged)	1
2	00-874172	"B" Flat Beater (60 Quart) (Packaged)	1
3	00-874278	"C" Six Wing Whip (60 Quart) (Packaged)	1
4	00-874190	"D" Wire Whip (60 Quart) (Packaged)	1
5	00-874284	"E" Dough Arm (60 Quart) (Packaged)	1
6	00-874285	"ED" Dough Arm (60 Quart) (Packaged)	1
7	00-874286	"P" Pastry Knife (60 Quart) (Packaged)	1
8	00-874267	Bowl Scraper (60 Quart) (Packaged)	1
9	00-874250	"I" Wire Whip (40 Quart) (Packaged)	1
10	00-874292	"ED" Dough Arm (40 Quart) (Packaged)	1
11	00-874248	"B" Flat Beater (40 Quart) (Packaged)	1
12	00-874249	"D" Wire Whip (40 Quart) (Packaged)	1
13	00-874268	Bowl Scraper (40 Quart) (Packaged)	1
14	00-874203	Bowl Truck (Packaged)	1
	00-438104-00004	Extension – Bowl (SST) (Packaged)	1
	00-438082	Splash Cover (60 Quart) (Packaged)	1
	00-438081	Splash Cover (40 Quart) (Packaged)	1
	00-438824	Chute – Ingredient (Packaged)	1
	00-874622	Kit – Deck Plate	1

Ref: NAVSEAINST 4160.3A NAVSEA S0005-AA-GYD-030/TMMP

NAVSEA/SPAWAR TECHNICAL MANUAL DEFICIENCY/EVALUATION REPORT (TMDER)

INSTRUCTIONS: Continue on 8 ½" x 11" page if additional space is needed.
1. Use this report to indicate deficiencies, problems and recommendations relating to publications.
2. For CLASSIFIED TMDERs see OPNAVINST 5510H for mailing requirements.
3. For TMDERs that affect more than one publication, submit a separate TMDER for each.
4. Submit TMDERs at web site https://nsdsa2.phdnswc.navy.mil or mail to: **COMMANDER, CODE 310 TMDER BLDG 1388, NAVSURFWARCENDIV NSDSA, 4363 MISSILE WAY, PORT HUENEME CA 93043-4307**

1. PUBLICATION NUMBER	2. VOL/PART	3. REV/DATE OR CHG/DATE	4. SYSTEM/EQUIPMENT ID

5. TITLE OF PUBLICATION	6. REPORT CONTROL NUMBER (6 digit UIC-YY-any four: xxxxxx-03-xxxx)

7. RECOMMEND CHANGES TO PUBLICATION

7a. Page #	7b. Para #	7c. RECOMMENDED CHANGES AND REASONS

8. ORIGINATOR'S NAME AND WORK CENTER	9. DATE	10. ORIGINATOR'S E-MAIL ADDRESS	11. TMMA of Manual (NSDSA will complete)

12. SHIP OR ACTIVITY Name and Address (Include UIC/CAGE/HULL)	13. Phone Numbers:
	Commercial (___) ___-_____ DSN ___-_____ FAX (___) ___-_____

FOLD HERE AND TAPE SECURELY
PLEASE DO NOT STAPLE

INCLUDE COMPLETE ADDRESS

USE PROPER POSTAGE

FOR OFFICE USE ONLY

COMMANDER
CODE 310 BLDG 1388
NAVSURFWARCENDIV NSDSA
4363 MISSILE WAY
PORT HUENEME, CA 93043-4307

FOLD HERE AND TAPE SECURELY
PLEASE DO NOT STAPLE

S6161-Z9-FSE-010