S6161-V7-FSE-010

0910-LP-017-0480

TECHNICAL MANUAL

FOR

FREEZER, MODELS F41-2M-SN, F41-2M-SNM, AND F41-2M-SN-MLR WITH 404A REFRIGERANT; INSTALLATION, OPERATION, AND MAINTENANCE INSTRUCTIONS

"Distribution Statement "A": Approved for public release; distribution is unlimited."

DEPARTMENT OF THE NAVY
NAVAL SEA SYSTEMS COMMAND

30 MAY 2003

0910LP0170480

APPROVAL AND PROCUREMENT RECORD PAGE

APPROVAL DATA FOR: S6161-V7-FSE-010

TITLE: Technical Manual for Freezer, Models F41-2M-SN, F41-2M-SNM, & F41-2M-SN-MLR with 404A Refrigerant; Installation, Operation, and Maintenance Instructions

APPROVAL AUTHORITY: Not Required

CONTRACT OR PURCHASE ORDER	SHIP APPLICABILITY	QUANTITY OF MANUALS	QUANTITY OF EQUIPMENT	BUILDING SHIPYARD
4500089535	CVN69	1	5	Northrop Grumman Newport News
4500001952	CVN76	3	6	Northrop Grumman Newport News

REMARKS:

Distributed to CVN76 in accordance with Contract No. N00024-95-C-2106, CDRL Item No. B006.

CERTIFICATION: Not Required

Date: May 30, 2003

Cospolich Refrigerator Co.
14695 Highway 61
Norco, LA 70079
CAGE 66682

Technical Manual

Installation, Operation, and
Maintenance Instructions

Convectional & Modular
Freezer
F41-2M-SN, F41-2M-SNM,
& F41-2M-SN-MLR

Cospolich Refrigerator Company, Inc.
Norco, LA 70079
800-423-7761

COSPOLICH

www.Cospolich.com

Table of Contents

	Page
List of Figures	i
List of Tables	ii
List of Appendices	iii
Chapter 1 – General Information	1-1
1.1 Introduction	1-1
1.2 Scope	1-1
1.3 Equipment Description	1-1
1.4 Equipment Supplied	1-1
Chapter 2 – Operation	2-1
2.1 Introduction	2-1
2.2 Controls and Indicators	2-1
2.3 Start-up Procedures	2-1
2.4 Shutdown Procedures	2-3
2.5 Preparation for Extended Period of Inactivity	2-3
Chapter 3 – Functional Description	3-1
3.1 System Description	3-1
3.2 System Operation	3-1
Chapter 4 – Scheduled Maintenance	4-1
4.1 Introduction	4-1
4.2 Preventive Maintenance Action Index	4-1
4.3 Preparation for Maintenance	4-1
4.4 Maintenance Procedures	4-1
4.4.1 Weekly Maintenance Requirements	4-1
4.4.2 Monthly Maintenance Requirements	4-2
4.4.3 Annual Maintenance Requirements	4-3
4.4.4 Three Year Frequency Maintenance	4-3
Chapter 5 – Troubleshooting	5-1
Chapter 6 – Corrective Maintenance	6-1
6.1 Introduction	6-1
6.2 Repair Procedures Replacement of:	
6.2.1 Motor, Compressor	6-1
6.2.2 Low Pressure Control	6-4
6.2.3 Thermal Expansion Valve	6-5
6.2.4 Filter Dryer	6-5

6.2.5 Motor, Condenser Fan 6-5
6.2.6 Condenser Fan 6-5
6.2.7 Anti-Condensate Heater 6-6
6.2.8 Door Handle 6-6
6.2.9 Door Hinge 6-6
6.2.10 Door Gasket 6-7
6.2.11 Power Switch 6-7
6.2.12 Cold Well Switch 6-7
6.2.13 Drain Line (forced air evaporator) 6-8
6.2.14 Shelf Standards 6-8
6.2.15 Lamp Socket* 6-8
6.2.16 Lamp Shield* 6-8
6.2.17 Light Switch* 6-9

6.3 Charging the Refrigeration System 6-9
6.4 Recalibrating the Thermometer 6-10

Chapter 7 – Parts List 7-1
7.1 Introduction 7-1
7.2 Source Codes 7-1

Chapter 8 – Installation 8-1
8.1 Unpacking 8-1
8.2 Installation 8-1

Chapter 9 – Electrical and Mechanical 9-1
9.1 Introduction 9-1
9.2 Electrical Abbreviations and Abbreviations 9-1

Chapter 10 – Warranty 10-1

Appendices A-1

* For refrigerators only unless otherwise noted.

List of Figures

Figure - Title	Page
Figure 1.1 - General Arrangement Drawing	1-3
Figure 4.1 - Thermometer Calibration	4-4
Figure 9.1 - Electrical Schematic	9-3
Figure 9.2 - Refrigeration Piping Schematic	9-4

List of Tables

Table - Title	Page
Table 1.1 - Leading Particulars	1-2
Table 2.1 - Controls and Indicators	2-1
Table 2.2 - Start-up Procedure – Refrigerated Storage	2-2
Table 2.3 - Operation of Cold Well (CFC)	2-2
Table 2.4 – Operation of Thaw Cabinet	2-2
Table 2.5 - Shutdown Procedures	2-3
Table 2.6 - Shutdown Procedures for an Extended Period	2-4
Table 4.1 - Preventive Maintenance	4-5
Table 5.1 - Mechanical and Electrical Troubleshooting Guide	5-1
Table 5.2 - Operator's Troubleshooting Guide	5-2
Table 7.1 - Vendor Source Codes	7-1
Table 7.2 - Parts List – Special Tools	7-2
Table 7.3 - Parts List	7-3
Table 9.1 - Operating Pressure Readings	9-2

List of Appendices

Title	Page
Appendix A – Assembly and Installation Instructions for Modular Units [1]	A-1
Appendix B – High/Low Temperature Alarm Manual [2]	B-1
Appendix C – Motor Characteristics & Performance Data	C-1
Appendix D – General Arrangement Drawing	D-1

[1] For Modular units only
[2] Where applicable

Chapter 1

General Information

1.1 Introduction

This technical manual provides information for the installation, operation, maintenance, and inspection of this unit manufactured by Cospolich, Inc., Norco, Louisiana. A complete parts breakdown is also provided.

1.2 Scope of the Manual

This manual provides sufficient information for maintenance of the equipment.

1.3 Equipment Description

The unit consists of the following parts:

a. Storage compartment – The insulated food storage compartment is clear storage area. Included in this area are the adjustable shelves, an interior light (for refrigerators), and the cooling coil.

b. Doors – Access to the storage compartment is through a hinge-mounted, insulated door(s). The door is fully "gasketed" to provide a tight seal.

c. Condensing Unit Compartment – This area contains the condensing unit(s) along with the necessary controls and other components.

d. Evaporator Coil – The evaporator coil is located in the storage compartment and is responsible for distributing the cold air associated with the refrigeration system.

e. Cabinet – The cabinet is the enclosure in which all of the above mentioned items are housed.

1.4 Equipment Supplied

The unit is shipped from the factory fully assembled except for the adjustable shelving that will require positioning on the pilaster standards as needed. The complete assembly is palletized and crated to minimize the possibility of damage

in shipping and storage. See Appendix A for assembly and installation instructions for Modular units.

Table 1.1 – Leading Particulars

Model:	F41-2M-SN & F41-2M-SN-MLR	F41-2M-SNM
Manufacturer:	Cospolich, Inc Norco, Louisiana 70079	Cospolich, Inc Norco, Louisiana 70079
Type:	Marine Freezer Unit	Marine Freezer Unit
Refrigerant:	R404a	R404a
Purpose:	Storage of Frozen Food Items	Storage of Frozen Food Items
Power Supply:	115 Volts AC	115 Volts AC
Operating Current:	14.3 Amps	14.3 Amps
Maximum Power Demand:	20 Amps	20 Amps
Drain Requirements:	None	None
Shipping Weight:	795 lbs.	765 lbs.
Operating Weight:	748 lbs.	708 lbs.
Volume (crated):	95 cu. Ft.	84 cu. Ft.

See Appendix D For Drawing

Figure 1.1 – General Arrangement Drawing

Chapter 2

Operation

2.1 Introduction

This model is a heavy-duty piece of equipment designed for continuous use. It incorporates automatic controls to regulate the cycling of the refrigeration system.

2.2 Controls and Indicators

Table 2.1 – Controls and Indicators

Name	Type	Function
Low Pressure Switch	Contact Points	Cycles the refrigerator system (automatic)
Suction Valve	Manual Plunger Valve	Isolate suction at the compressor
Discharge Valve	Manual Plunger Valve	Isolate discharge line at receiver
Power Control Switch (On/Off)	Contact Points	Terminates all of the electrical into and past the supply cord
Light Switch [1,3]	Contact Points	Activates the interior lighting with the opening of the cabinet door
Thermostat	Contact Points	Cycles the refrigerator system (automatic)
Defrost Timer [2]	Contact Points	Controls scheduled evaporator coil defrosting
Evaporator Pressure Regulator [3]	Needle Valve	Regulates the flow of refrigerant
Solenoid Valve [1,3]	Automatic Plunger	Shuts off refrigerant flow
Thaw Switch [4]	Contact Points	Switches the function from refrigerate to thaw
Well Switch [3]	Contact Points	Activates the solenoid to bring the cold well on line

[1] Refrigerators

[2] Freezers

[3] Cold Food Counters

[4] Thaw Cabinets

2.3 Start-up Procedure

The refrigeration system is completely factory assembled, pre-charged, and ready for operation. To energize the system it is only necessary to find the power supply cord and connect it to a proper electrical source. Once the supply cord has been connected to a power source, the unit can be started by flipping the power control switch to the "ON" position.

Table 2.2 – Start-up Procedure (Refrigerated Storage)

Operation	Results
1. Activate system by inserting electrical service cord into electrical supply source and flip power control switch.	Compressor should immediately come on line along with the condenser fan and the evaporator fan.
2. Locate liquid refrigerant indication glass mounted on the receiver.	Once the system has been operating for two minutes, the glass should appear clear and full of liquid refrigerant.
3. Wait 15 minutes	The temperature in the storage area should begin to approach the "green zone" on the thermometer indicating adequate operation.
4. Wait 3 hours	Once the operating temperature has been reached, stocking of the containment area can begin.

Table 2.3 – Operation of Cold Well [1]

Operation	Results
1. Locate cold well switch	Mounted above refrigeration equipment compartment in the grill
2. With refrigeration system running, flip switch to "ON"	After some time, ice will begin to form on the bottom and sides of the cold well.
3. Turn cold well switch to "OFF"	The ice will gradually melt.

[1] For Cold Food Counters (CFC) only

Table 2.4 – Operation of Thaw Cabinet [2]

Operation	Results
1. To use the unit as a refrigerator, turn the control knob to "REF".	Unit will operate in the refrigerate mode.
2. To use the unit as a thaw cabinet, turn the control knob to "THAW".	Unit will operate as a thaw cabinet.

[2] For Thaw Cabinets only

Table 2.5 – Shut Down Procedures

Operation	Results
1. De-energize the system by flipping the power control switch to the "OFF"position and disconnecting the electrical supply cord.	Once the system is de-energized, the condenser fan and the evaporator fan will cease operation.

2.4 Shut-Down Procedure

To shut down, disconnect the electrical supply cord and open the door(s) allowing the interior cabinet temperature to equalize with the room temperature. A mild detergent diluted in warm water should be used to wash down the interior and exterior surfaces of the cabinet.

WARNING:

Prior to any cleaning of the system involving placing hands in areas with moving parts, the system should be deactivated by disconnecting the power supply cord.

2.5 Preparation for an Extended Period of Inactivity

This unit is designed for continued use at automatically cycled intervals. However, in the event of an extended shut down, both the mechanical refrigeration system and the food storage compartment system must be serviced.

Table 2.6 – Shut Down Procedures for an Extended Period

Operation	**Results**
1. Fully close discharge valve at the receiver	Compressor will pump liquid refrigerant from system to receiver
2. Fully close suction valve at the compressor	This will isolate the refrigerant between the two valves
3. Disconnect power supply	De-energizes the system
4. Clean and wipe dry the food storage compartment	This will reduce the odor buildup during shut down

Chapter 3

Functional Description

3.1 System Description

This unit is self contained, automatically controlled, continuous duty perishable food storage system. It is designed with the intent and purpose of storing food items.

The operating temperature is automatically monitored by controls that are factory set to maintain a predetermined adequate condition.

The equipment is installed in two basic compartment assemblies. They are:

a. *Condensing Unit Compartment* – This area contains the condensing unit along with the necessary controls.

b. *Storage Compartment* – This insulated food storage area is clear storage area. Included in this compartment is the adjustable shelving.

c. *Cold Food Well*[1] – The insulated and refrigerated compartment is designed to accommodate standard cold food pans on the top side of the counter.

3.2 System Operation

The design of the refrigerated cabinet focuses primarily on the safe storage of food products requiring refrigeration. In engineering, considerable attention was placed on its functional and its serviceable capabilities.

The refrigeration system is a closed loop system. Barring a leak in the system, the addition of refrigerant is not required. However, a periodic check of its level is recommended to insure that the system operates at the optimum level at which it was designed.

The condensing unit is found within the regular equipment compartment. Also in this compartment is the electrical control panel that contains the power switch and a terminal box. On all models that feature forced air evaporators, a heated condensation evaporator pan or a heated condensing unit base is provided. The evaporator pan is also located in the equipment compartment. On remote applications, the evaporator pan is optional.

---

[1] Cold Food Counters

Special care in the initial loading of the storage compartment should be taken. It is suggested that the loading be scheduled in three equal portions allowing three hours between each loading.

The chilled food compartment is designed for the storage of perishable food items that require a temperature range of 37 to 40 degrees Fahrenheit on refrigerators and –5 to 0 degrees Fahrenheit on freezers. It is a general rule that adequate spacing is allowed between stored items to allow for proper air circulation. The well surface of a Cold Food Counter is designed to operate at 32 degrees Fahrenheit. The storage compartment of a Thaw Cabinet is in the range of 33 to 42 degrees Fahrenheit.

Chapter 4

Scheduled Maintenance

4.1 Introduction

To ensure the longest and most trouble free operation of the unit, a thorough maintenance schedule is required to be adhered to periodically. The maintenance system should be designed to maximize the efficient use of maintenance personnel, reduce down time, and provide the orderly acquisition of spare parts support.

The Cospolich refrigeration cabinet will generally be in operation in a facility where scheduled maintenance is performed according to Maintenance Index Plans. Your unit is no exception to required maintenance. This chapter of the manual is intended as an alternate to any standard maintenance program that may pre-exist. The preventive maintenance schedule is based upon similar maintenance requirements for commercial refrigeration equipment.

4.2 Preventive Maintenance Action Index

If you do not have a Maintenance Index Plan, one is included for you in Table 4.1.

4.3 Preparation for Maintenance

Since many areas affected by the maintenance schedule are electrically supplied, it is recommended that the system be de-energized prior to making the inspections.

4.4 Maintenance

4.4.1 Weekly Inspection

a. The unit should first be de-energized by switching the toggle switch to the "OFF" position. The switch is found on the control panel in the condensing unit compartment.

***Note**: It is necessary to first remove the front air grill. This is done by lifting it straight up then pulling the bottom out and down.

b. Using a vacuum or small hand broom, brush the condenser in a vertical motion to remove any dust or debris that may have accumulated.

4.4.2 Monthly Inspection

a. Check the drain line at both the inlet and outlet ends to make certain that there are no obstructions (forced air evaporator models only). It is not recommended to use any chemicals in clearing a clogged drain. The preferred method of unstopping an obstructed drain is to use compressed air. Approximately 60 lbs. should be sufficient. Simply remove the drain line at the evaporator coil and attach an air-line to it.

b. With the unit in a cooling cycle, use a flashlight and locate the refrigerant sight glass. If the compressor has been running for three minutes there should be no visible bubbles.

c. If bubbles are present:

   i. Determine if there is a leak by using a halide or electronic leak detector.
   ii. Repair leak(s).

WARNING:
The system should be de-energized when checking for leaks.

1. If a leak is found on a flared fitting, it can often be repaired by simply tightening the brass flare nut ¼ of a turn. If tightening does not repair the leak, it may be necessary to reflare the tubing.
2. If a leak is found on a brazed joint, it will be necessary to pump down the system's refrigerant charge to remedy the problem.
3. To pump the refrigerant into the receiver, you must first connect service gauges to the system at the suction valve on the compressor and the liquid valve on the receiver. Purge the gauges before opening the system's valves to avoid contamination. Run the receiver (liquid or high pressure) valve all of the way in to stop the refrigerant from exiting the receiver. Start the unit and allow it to run until the suction or low-pressure gauge reads 5 lbs. When it reaches 5 lbs., de-energize the system.
4. Once pumped down, the necessary repairs can be made.

d. Using a mild non-abrasive detergent and soft cloth, wipe the interior lining beginning with the top and working down. Also, wipe the gasket and where it sits on the cabinet exterior.

e. Remove the front air grill and unbolt the condensing unit. Once unbolted, slide it out. The unit is capable of being completely removed due to the extra tubing coiled up behind the unit. With the unit de-energized, check the condenser fan motor and make certain that it is not loose. Inspect the fan for cracks and make sure that it is tight on the motor.

f. To inspect the evaporator motor, first turn the unit off. Then, remove the drain line from the evaporator pan. Loosen the four screws that hold the shroud. Lower the shroud and disconnect the polarized electrical connection. With the shroud out of the cabinet, proceed to inspect the motor mounting bolts and the fan for cracks or excessive play. [2]

g. Using a mild detergent and water, wipe the vinyl gasket. Make certain to also clean under the gasket to remove any mildew or residue.

h. Using a mild, non-abrasive detergent and warm water, wipe the cabinet exterior. When cleaning always follow the grain of the stainless steel to prevent scratching or marring of the finish surface.

4.4.3 Annual Maintenance

a. Slide condensing unit out of the compartment and check all refrigerant lines for leaks or fatigue. Make certain that no exposed copper tubing is in contact with any other metal surface. If there is contact, install an insulating material between the two metal components.

b. With the condensing unit out and the breaker at the main panel "OFF", inspect the system's wiring. Look for a tight fit of all connections and make certain that the wire restraining devices are tight. Inspect all wires and cords, paying particular attention to nicks or age cracks in the insulation.

c. Visually inspect the outer panel and components of the cabinet. Check screws and bolts to make certain that they are tight. Also, make sure that the bolts that secure the base frame to the deck are tight.

4.4.4 Three Year Frequency

a. Replace the door gasket(s). To accomplish this, it is first necessary to remove all products from the refrigerated compartment to avoid spoilage. Take the door off of the cabinet and lay it on a flat surface – gasket up. Lift the flange

[2] On forced air evaporator systems only.

of the gasket and remove the fasteners that secure the gasket to the door. Remove the original gasket and replace with a new one by reversing the process.

b. Inspect all motors and shafts for both noise and wear. If they show age, replace them.

c. With the main power off, remove the condensing unit from its compartment and inspect all wiring. Also, remove the cover from the controls and check them to make certain that they are operational and do not show signs of wear.

d. Inspect the operation of the door latch assembly. Look into the latch to make certain that the moving parts do not show any signs of wear. Make sure that the screws are tight on the latch and strike. To check the hinges, open the door at a 90-degree angle to the cabinet. With a little pressure, lift up the outer edge of the door. If there is an upward movement of ½ of an inch or more, replace the hinges.

e. To recalibrate the thermometer, remove it from the cabinet. Using a small, flat screwdriver, remove the lens. Prepare an ice water bath and immerse the thermometer bulb at least two inches into the ice bath. Within 30 seconds the indicator dial should read 32 degrees Fahrenheit. If it does not, it needs to be recalibrated. Do this by placing your index finger on the opposite side of the needle that needs to move. Then, using a flat screwdriver, turn the screw at the center of the dial ¼ of a turn in the direction you want to move the dial. Repeat the procedure until the needle is on 32 degrees. See Figure 4-1 below for an illustration.

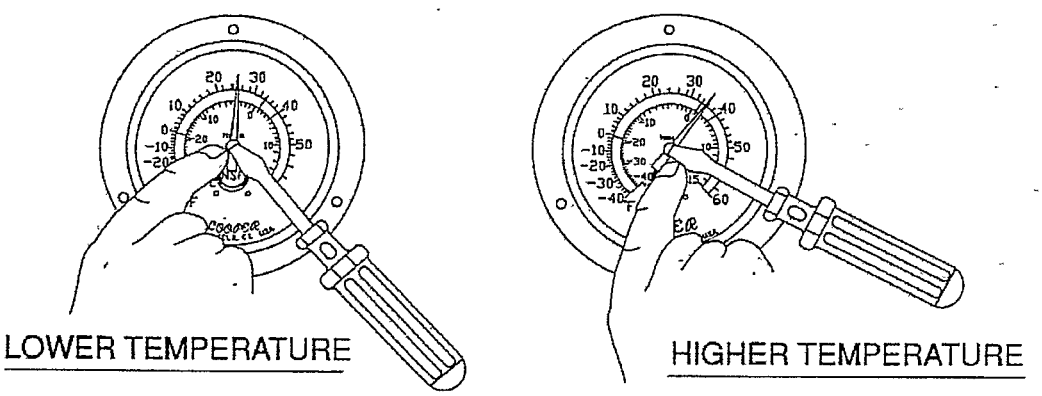

Figure 4.1 – Thermometer Calibration

Table 4.1 – Preventative Maintenance Action Index

1.	Weekly	a. Inspect condenser coil to make certain that air flow is not hampered and that it is clear of dust and debris.
2.	Monthly	a. Inspect and clear drain line. b. Check the liquid refrigerant sight glass to make certain that the system is completely charged. c. Clean the interior of the cabinet with a mild soap and warm water solution. Be certain to dry thoroughly. d. Check both the condenser fan motor and the evaporator fan motor to make certain that they are operational and that the fans are tight and secure (evaporator motor on ADS models and forced air evaporator units only). e. Clean door gaskets and breaker strips with a damp cloth. f. Clean exterior of cabinet with mild soap and warm water. Dry thoroughly.
3.	Annually	a. Slide condensing unit from the refrigeration compartment and check all joints and fittings for any signs of leaks or fatigue. b. Inspect electrical connections to confirm that there is good contact and that wires are neither weakened nor frayed. c. Check the integrity of the cabinet.
4.	Three-year Frequency	a. Replace door gasket(s). b. Inspect motor shafts for noise or wear. c. Inspect electrical controls and wiring. d. Inspect door latch(s) and hinges. e. Recalibrate thermometer.

Chapter 5

Troubleshooting

5.1 Introduction

This chapter provides a systematic check of components in determining a possible cause of failure in the event of various symptoms.

It is necessary that the individual performing the troubleshooting tasks be familiar with the function of the equipment as described in Chapter 3.

The following tables list the most common symptoms that may be experienced and the recommended corrective action.

Table 5.1 – Mechanical and Electrical Troubleshooting Guide

Symptom	Possible Failure	Remedy
Unit does not operate	1. Control failure 2. Incorrect voltage 3. Failed compressor	1. Adjust or replace control 2. Correct 3. Replace
Unit runs continuously	1. Low on refrigerant 2. Control failure 3. Bad connection at TXV 4. Restricted air flow or dirty 5. Bad condenser fan motor 6. TXV stuck open 7. Compressor failure 8. Ineffective door seal 9. Restricted circulation in storage compartment	1. Leak check system and recharge 2. Adjust or replace control 3. Check and secure sensor bulb to suction line 4. Rectify air flow problem and clean condenser 5. Check and replace if necessary 6. Replace 7. Replace 8. Adjust door strike and hinges 9. Redistribute food for even air flow
Low head pressure	1. Defective compressor 2. Low refrigerant 3. Ambient temperature too low	1. Replace 2. Leak check system and recharge 3. Raise room temperature
High head pressure	1. Blocked or dirty condenser 2. Ambient temperature too high 3. System contains air 4. Refrigerant overcharge	1. Clean and remove any obstructions 2. Lower room temperature 3. Evacuate, change filter dryer, recharge 4. Reduce amount of refrigerant in system
Short cycling	1. Maladjusted control	1. Adjust control

Table 5.2 – Operator's Troubleshooting Guide

Symptom	Possible Failure	Remedy
Unit does not cool	1. Blown fuse/circuit breaker 2. Bad connection at supply cord 3. Ill fitting gasket	1. Replace fuse/reset circuit breaker 2. Check supply cord at outlet 3. Tighten strike on door latch

Chapter 6

Corrective Maintenance

6.1 Introduction

This chapter focuses on the instruction needed in the removal and replacement of certain components. It also addresses the repair of components not listed under the scheduled maintenance index covered in Chapter 4.

The level of skills required to perform the service or repair will vary. Some may require specific training while others may be performed by any type of mechanic. It is up to the individual and his/her supervisor to determine the breadth of knowledge required to perform the necessary service or to make the necessary repairs.

It is also important to know that any procedure requiring the handling of refrigerant requires proper certification.

The service or repair items are limited to those parts listed in Table 7-3.

6.2 Repair Procedures

WARNING:
Prior to performing any work on the refrigeration system, it is required that the unit be de-energized.

6.2.1 Replacement of Compressor Motor

a. Evacuate the refrigerant from the system using a refrigeration vacuum pump.

   ***Note**: Federal laws require the proper handling and disposal of refrigerants. It is unlawful to release any refrigerant into the atmosphere.*

b. Disconnect the electrical power to the unit. This is done by turning off the circuit in the main supply panel. It should be noted on the panel that the refrigerator (freezer) is being serviced and that the breaker must remain off.

c. To reach the condensing unit, the front ventilation grill on the front of the cabinet must be removed. This is done by pulling the grill up vertically about one inch, out over the retainer angles and then down.

d. With the grill removed, use a 3/8" wrench or socket and ratchet to unscrew the mounting bolt that secures the condensing unit to the cabinet base.

e. Once the mounting bolt is removed, carefully slide the whole condensing unit forward – lifting it over the angle-mounting clip at the front of the base. Due to extra copper coil refrigeration lines, the unit can be completely removed from the compartment and placed on the deck.

f. Find the electrical terminal box on the side of the compressor and remove the front cover. Disconnect the wires from the compressor. Remove the screws that attach the terminal box to the compressor. At this point, the compressor will be electrically detached.

g. Using wrenches, remove the suction and discharge valve stem cover caps on each side of the compressor. Also, remove the cap nut on the suction and discharge side as well.

h. Disconnect the high-side line at the compressor. This is done by heating the brazed connection using an acetylene and oxygen torch set.

Note: Do not apply a flame to a line containing refrigerant.

i. To remove the low-pressure control capillary tube and service fitting, loosen the ¼" brass flare nut on the suction valve.

j. The final step in removing the compressor is to disconnect it from its mounting. To free the compressor, remove the wire clips on each of the four feet.

k. To install the new compressor, place it in position on the base and reinstall the four wire clips.

l. Reattach the suction and discharge valve blocks to the appropriate sides of the compressor.

m. Reattach the low-pressure control capillary tube and service fittings to the suction side of the compressor.

n. Reattach the suction line to the compressor.

o. In reconnecting the high-pressure line, it is necessary to first prepare the line's end. Using a fine sandpaper or emery cloth, clean the residue off of the end. Also, clean the connection on the compressor. Apply flux to both ends and braze the connections into place.

p. Remove the valve stem cap from the suction valve block on the side of the compressor. Run the valve stem all of the way out and then in one turn clockwise.

q. Place the refrigeration service manifold gauge hoses on the suction and high-side valves. Attach a bottle of refrigerant to the charging hose and charge the system with 150 psi of vapor. Using an electronic leak detector, check the new connections for leaks. Should a leak appear, evacuate the charge and repair the leak. Repeat the leak check process again.

r. If the system checks out with no leaks, recover the test charge using a vacuum recovery pump.

s. With the system pressure at zero, connect the vacuum pump and evacuate the system. The pump should rum for one hour. The vacuum pump should pull the system down to 30 inches of vacuum.

t. Reattach the electrical terminal box and secure all wiring.

u. Check the refrigeration tag on the unit for the number of ounces of refrigerant to place into the system for start-up. Monitor the pressure on both the suction and discharge sides of the manifold gauges. As the temperature in the storage area begins to fall, check the refrigerant flow through the sight glass. The unit is fully charged when there are no bubbles in the sight glass. If after five minutes of operation, bubbles are still present, it may be necessary to add more refrigerant (add refrigerant in small amount to keep from overcharging).

WARNING:

Overcharging a refrigeration system can be dangerous.

If the system overcharge is sufficient enough to immerse the major parts of a hermetic compressor in liquid refrigerant, a situation has been created that when followed by unusual but possible circumstances, can lead to compressor housing seam separation or rupture.

The sequence of circumstances that can lead to compressor housing seam separation or rupture occurs in the following manner:

1. The system overcharge immerses the compressor motor, piston, connecting rods, cylinders, etc. in liquid refrigerant, thereby effectively forming a hydraulic block preventing the compressor from starting. This condition is known as locked rotor.

2. Electrical current continues to flow through the compressor motor windings that become, in effect, electric resistance heaters. The heat produced begins to vaporize the excessive liquid overcharge, causing a rapid increase in system pressure.

3. If the system compressor protective devices fail for any reason prior to or during this locked rotor heating cycle or cycles, liquid refrigerant may be vaporized sufficiently fast enough to raise the pressure within the system to extremes far greater that the housing or weld seam is designed to handle.

4. In some instances where the amount of refrigerant overcharge is critical in proportion to the system internal volume, the pressure reached can cause a compressor housing seam separation or rupture that can be hazardous.

The remedy to eliminate this exceedingly rare, but potential hazard is to use correct refrigerant charge amounts and techniques.

Cospolich, Inc. urges that all individuals responsible for training, teaching, or advising installation mechanics and service personnel emphasize proper charging techniques. In addition, Cospolich advises strict adherence to refrigerant charge amounts specifically recommended by the manufacturer of the refrigeration, air conditioning, or heat pump system.

6.2.2 Replacement of Low Pressure Control

a. Disconnect the unit from electrical service.

b. Remove control cover and disconnect electrical terminals.

c. Disconnect capillary tube.

d. Remove mounting fasteners on control base and install new control by reversing the procedure.

e. To adjust the control, hook up the service gauges to the suction and discharge valves and crack them to allow the gauges to read.

f. Using a standard screwdriver, coarse adjust the control by turning the adjustment screws on top of the control. Preset the cut-in and cutout and 68 lbs. and 38 lbs. respectively for a refrigerator and 25 lbs. and 10 lbs. respectively for a freezer.

g. Start the system. Allow it to run for five minutes. Monitor the low side pressure. Fine adjustments will be required to achieve the prescribed cycling pressures.

__Note__: Running the suction valve in or out as required to effectively change the pressures can speed up the control adjustment process.

6.2.3 Replacement of Thermal Expansion Valve (TXV)

a. Close liquid valve and run compressor until it pumps refrigerant into the receiver (low side service gauge will read 1 lbs.). Close the suction line valve.

b. Disconnect the sensor bulb on the suction line.

c. Disconnect the liquid line (1/4") and suction line (3/8") then remove the TXV.

d. Install new TXV, reconnect lines, and re-fasten the sensor bulb.

Note: It is not recommended to adjust the valve super heat as this comes pre-set from the factory.

6.2.4 Replacement of Filter Dryer

a. Close liquid line valve and run compressor until the low side refrigeration gauge indicates zero lbs., then close suction.

b. Remove filter dryer from system and replace with new dryer.

c. Purge system and add refrigerant if needed.

6.2.5 Replacement of Condenser Fan Motor

a. Disconnect all electrical power to the unit.

b. Remove the condensing unit from the condensing unit compartment.

c. Remove the protective wire shroud from around the motor.

d. Disconnect the fan motor leads from the terminal box on the compressor.

e. Remove the mounting screws at the motor base.

f. Using an allen wrench, remove the aluminum fan.

g. To install the new motor, reverse the process.

6.2.6 Replacement of the Condensing Fan

a. Disconnect all electrical power to the unit.

b. Remove the condensing unit from the condensing unit compartment.

c. Remove the protective wire shroud from around the motor.

d. Using an allen wrench, loosen the set screw on the blade hub and slide the blade from the shaft.

e. Reverse the procedure to reassemble.

6.2.7 Replacement of the Anti-Condensate Heater

***Note**: The anti-condensate heater is located behind the front edge of the vinyl breakers in the door opening.*

a. Disconnect all electrical power to the cabinet.

b. Remove vinyl breakers by exerting pressure at the front edge toward the center of the door.

c. Disconnect anti-condensate heater wiring connection.

d. Remove heater from recessed rail.

e. Replace new heater in rail and reconnect electrical.

6.2.8 Replacement of Door Handle

***Note**: Removing the handle from the door may be necessary to fit the cabinet through a door opening during install.*

a. Remove the three side mounting screws in the latch.

b. Remove the two screws in the strike.

c. Replace in reverse order.

6.2.9 Replacement of Door Hinge

***Note**: This procedure is best performed with two people – one to hold the door while the other removes the attachment screws.*

a. Using a screwdriver, remove the three screws that attach the butt section of the hinges to the cabinet.

b. With the door detached from the cabinet, remove the screws that attach the hinges to the door.

c. To install the replacement hinges, reverse the process.

6.2.10 Replacement of Door Gasket

***Note**: It is suggested that the door be removed from the cabinet and placed gasket up on a table. Also, try not to cut the gasket in the replacement process.*

a. Remove the fasteners located under the gasket lip and pull the gasket off.

b. Clean the gasket retainer and the immediate area.

c. Start new gasket into retainer.

d. Once positioned, replace fasteners.

6.2.11 Replacement of Power Switch

a. Shut off all electrical power going to the unit.

b. Remove the front air grill.

c. Using a flat blade screwdriver, remove the cover plate with the switch attached.

d. Remove the wires connected to the switch.

e. Unscrew the lock washer and remove the switch.

f. Reverse the process when installing the new switch.

6.2.12 Replacement of the Cold Well Switch[3]

a. Shut off all electrical power going to the unit.

b. Remove the front air grill.

[3] On Cold Food Counter models only.

c. Disconnect the wires on the cold well switch.

d. Remove the old switch by pushing it through the front of its mounting plate.

e. Snap in new switch from the front of its mounting plate.

f. Reconnect the electrical to the switch.

6.2.13 Replacement of the Drain Line

***Note**: To replace the vinyl drain line, it is necessary that there be access to the rear of the cabinet.*

a. On the cabinet exterior, remove the rear tubing cover using a ¼" nut driver.

b. On the interior of the cabinet, remove the drain line cover.

c. From the inside of the cabinet, pull the drain from the evaporator shroud fitting.

d. From the rear, pull the drain through the penetration in the back wall of the cabinet.

e. At the bottom of the condensing unit compartment, cut the drain line retaining strap. The drain line should now be free.

f. To install the new drain line, reverse the process.

6.2.14 Replacement of Shelf Standards

a. To replace a shelf standard, you must first remove all products from the shelves then remove the shelves.

b. With the shelves removed, slide the standard up vertically ½" to allow it to slip out of the retainer stud.

6.2.15 Replacement of the Lamp Socket

WARNING:

It is necessary to shut off all power going to the cabinet prior to performing this repair.

a. With the power off, remove the lamp shield by turning it counter-clockwise.

b. Unscrew and remove the light bulb.

c. Remove the two screws in the base of the fixture using a ¼" nut driver.

d. Pull the fixture out revealing the electrical connections.

e. Remove the fixture by disconnecting the electrical via the two quick connect fittings.

f. Install the replacement by reversing the process.

6.2.16 Replacement of Lamp Shield

a. Unscrew the shield by turning counter-clockwise.

b. Replace by turning clock-wise.

6.2.17 Replacement of Light Switch

WARNING:

It is necessary to shut off all power going to the cabinet prior to performing this repair.

a. Using a thin blade screwdriver, apply twisting pressure between the light switch and the cabinet. This will allow the switch to pop out.

b. Pull the switch away from the cabinet about 2", exposing the wires.

c. Remove the connections from the switch.

d. Fasten the connectors to the new switch.

e. Place the new switch in the hole and apply pressure to the flange of the switch until it snaps into place.

f. Test the switch to make sure that it is operable.

6.3 Charging the Refrigeration System

a. Connect service gauges to the suction and discharge service valves then open valves one full turn.

b. If the system is pressurized slightly, open both manifold gauge valves and purge the service line gauges.

c. With manifold gauge valves closed, start refrigeration system.

d. Attach a drum of refrigerant to the suction service side of the manifold gauges and add refrigerant until the liquid sight glass is clear of bubbles.

6.4 Recalibrating the Thermometer

a. To recalibrate the thermometer, remove it from the cabinet. Using a small, flat screwdriver, remove the lens. Prepare an ice water bath and immerse the thermometer bulb at least two inches into the ice bath. Within 30 seconds the indicator dial should read 32 degrees Fahrenheit. If it does not, it needs to be recalibrated. Do this by placing your index finger on the opposite side of the needle that needs to move. Then, using a flat screwdriver, turn the screw at the center of the dial ¼ of a turn in the direction you want to move the dial. Repeat the procedure until the needle is on 32 degrees. See Figure 4-1 on page 4-4 for an illustration.

Chapter 7

Parts Lists

7.1 Introduction

This section of the manual contains lists of replaceable parts. Each of the tables contains a list of removable parts associated with an assembly of the cabinet or refrigeration system. No parts identification has been provided for details of permanently assembled items or those that are not suitable for field repair.

7.2 Source Codes

The sources for some items are shown in Table 7.1 below.

Table 7.1 – Vendor Source Codes

Code Number	Name	Address
14852	Bohn Heat Transfer	Danville, IL 61932
32761	Kason Industries	Shenandoah, GA 30265
50992	Ranco Controls	St. Louis, MO 63143
78462	Sporlan Valve	St. Louis, MO 63143
14569	Copeland Corporation	Sidney, OH 45365
17529	Watsco	Hialeah, FL 33010
59431	Tecumseh Products	Tecumseh, MI 49286
49048	Miljoco Corporation	Eastpointe, MI 48021
45020	Nashville Wire Products	Nashville, TN 37202
79264	Jean's Extrusions, Inc.	Salem, IN 47167
2K223	Refrigeration Hardware	Sun Valley, CA 91353
87518	Standard Keil, Inc.	Allenwood, NJ 08720
60886	Idec Corporation	Sunnyvale, CA 94089
19220	Eberhard, Inc.	Cleveland, OH 44136
66682	Cospolich, Inc.	Norco, LA 70079

Table 7.2, on the following page, is a parts list of special tools required for routine service.

Table 7.2 – Parts List – Special Tools List

Part Number	Description	Quantity
R1412	Refrigerant service gauges with hoses	1
VA70264	Service valve wrench	1
50992	Refrigerant	30 lbs.

Table 7.3 – Parts List

Parts List - Cabinet R41-2M-SN				
Item	Cosp #	Mfg #	Vendor	Qty
Latch	HXLH06	172BC	Kason	12
Hinge	HXHE02	217	Kason	15
Thermometer	RWTM01C	V20362002	Milijoco	3
Pilaster #1	HXSD36	65	Kason	18
Pilaster #2	HXSD48	65	Kason	6
Pilaster Clip	HXCS01	66	Kason	84
Shelves #1	SEW22AX26 B	22.25" X 26.5"	Cospolich	21
Shelves #2	-	-	-	-
Gasket #1	6449	22" X 66.25"	Cospolich	3
Gasket #2	6449	22" X 51.25"	Cospolich	3
Mullion Heater #1	L1HR172	L1HR168	Cospolich	3
Mullion Heater #2	L1HR145	145"	Cospolich	3
Breaker Kit #1	20.5"	-	Cospolich	12
Breaker Kit #2	49.75"	-	Cospolich	12
Breaker Kit #3	64.75"	-	Cospolich	12
Light Switch	LRLS01	2767-1012-3000	Standard Keil	6
Light Guard	LRLC01	2778-1010-3000	Standard Keil	3
Light Socket	LRSK01	L10-X003	Component Hdwr	3
Light Bulb	LRSB01	R79-0040	Component Hdwr	3

Parts List - Refrigeration R41-2M-SN				
Item	Cosp #	Mfg #	Vendor	Qty
Evaporator Coil Assy	RWE040	TA23AF	Heatcraft	3
Evaporator Motor	RWEM03	25300701	Heatcraft	9
Evaporator Fan	RWE5101B	5101B	Heatcraft	9
Expansion Valve	RWEV30	FS 1/2 C	Sporlan	3
Thermostat	RWTT08	A319ABC-24-01	Johnson Controls	3
Condensing Unit	RUT520	FJCF-A050-IAA-201	Copeland	3
Compressor	RUT511	RS43C1E-IAA-100	Copeland	3
Condenser	RWCD37	066-0303-00	Copeland	3
Condenser Fan Blade	RWFB08	083-0130-00	Copeland	3
Condenser Fan Motor	RWCM27	050-0259-12	Copeland	3
Receiver	RWRT12	577-0346-02	Copeland	3
Start Capacitor	RWCP03	014-0008-57	Copeland	3
Run Capacitor	-	-	-	-
Relay	RWRLY02	040-0102-00	Copeland	3
Overload	RWOVL02	071-0329-15	Copeland	3
Filter Dryer	RWFD02	C-052-S	Sporlan	3
Sight Glass	RWSG01	SG-114	Watsco	3
Pressure Control	RWPL02	010-1483	Ranco	3
Power Control Switch	LWTS01	-	Cospolich	3
Terminal Box Assy	MT-001	-	Cospolich	3

Table 7.3 – Parts List

Parts List – Cabinet F41-2M-SNM				
Item	Cosp#	Mfg#	Vendor	Qty
Latch	HXLH22	533D	Kason	2
Hinge	HXHE02	217	Kason	5
Thermometer	RWTM01C	V20362002	Milijoco	1
Pilaster #1	HXSD36	65	Kason	6
Pilaster #2	HXSD48	65	Kason	2
Pilaster Clip	HXCS01	66	Kason	28
Shelves #1	SSW25CX23 B	-	Cospolich	7
Shelves #2	-	-	-	-
Gasket #1	6449	25.5 X 51.75	Cospolich	1
Gasket #2	6449	25.5 X 66.75	Cospolich	1
Mullion Heater #1	L1HR153H	-	Cospolich	1
Mullion Heater #2	L1HR183H	-	Cospolich	1
Breaker Kit #1	24"	-	Cospolich	4
Breaker Kit #2	65.25"	-	Cospolich	2
Breaker Kit #3	50.25"	-	Cospolich	2
Light Switch	-	-	-	-
Light Guard	-	-	-	-
Light Socket	-	-	-	-
Light Bulb	-	-	-	-

Parts List - Refrigeration F41-2M-SNM				
Item	Cosp #	Mfg #	Vendor	Qty
Evaporator Coil Assy	RWE110	TL21AF	Bohn	1
Evaporator Motor	RWEM14	25303201	Bohn	1
Evaporator Fan	RWFB11	23100201	Bohn	1
Expansion Valve	RWEV30	FS 1/2 Z	Sporlan	1
Thermostat	RWTT02	T6031A-1029	Honeywell	1
Defrost Timer	RWDT01	8145-00	Paragon	1
Condensing Unit	RUT730	FJAF-A075-CAA-201	Copeland	1
Compressor	RUT741	RS64C1E-CAA-100	Copeland	1
Condenser	RWCD56	066-0304-00	Copeland	1
Condenser Fan Blade	RWFB18	083-0102-00	Copeland	1
Condenser Fan Motor	RWCM38	050-0244-01	Copeland	1
Receiver	RWRT21	577-0431-00	Copeland	1
Start Capacitor	RWCP02	014-0008-74	Copeland	1
Run Capacitor	RWCP56	014-0037-16	Copeland	1
Relay	RWRLY12	040-0001-38	Copeland	1
Overload	RWOVL42	071-0127-43	Copeland	1
Filter Dryer	RWFD02	C-052-S	Sporlan	1
Sight Glass	RWSG01	SG-114	Watsco	1
Pressure Control	RWPL02	1483	Ranco	1
Power Control Switch	LWTS01		Cospolich	1

Terminal Box Assy	LT-001	-	Cospolich	1

Parts List – Cabinet R41-2M-SN-MLR				
Item	Cosp #	Mfg #	Vendor	Qty
Latch	HXLH06	172BC	Kason	2
Hinge	HXHE02	217	Kason	5
Thermometer	RWTM01C	V20362002	Milijoco	1
Pilaster #1	HXSD36	65	Kason	6
Pilaster #2	HXSD48	65	Kason	2
Pilaster Clip	HXCS01	66	Kason	28
Shelves #1	SSW22AX26 B	-	Cospolich	7
Shelves #2	-	-	-	-
Gasket #1	6449	22" X 66.25"	Cospolich	1
Gasket #2	6449	22" X 51.25"	Cospolich	1
Mullion Heater #1	L1HR137	-	Cospolich	1
Mullion Heater #2	L1HR167	L1HR168	Cospolich	1
Breaker Kit #1	20.5"	-	Cospolich	4
Breaker Kit #2	49.75"		Cospolich	2
Breaker Kit #2	64.75"	-	Cospolich	2
Light Switch	LRLS01	2767-1012-3000	Standard Keil	2
Light Guard	LRLC01	2778-1010-3000	Standard Keil	1
Light Socket	LRSK01	L10-X003	Component Hdwr	1
Light Bulb	LRSB01	R79-0040	Component Hdwr	1

Parts List – Refrigeration R41-2M-SN-MLR				
Item	Cosp #	Mfg #	Vendor	Qty
Evaporator Coil Assy	RWE040	TA23AF	Heatcraft	1
Evaporator Motor	RWEM03	25300701	Heatcraft	3
Evaporator Fan	RWE5101B	5101B	Heatcraft	3
Expansion Valve	RWEV30	FS 1/2 C	Sporlan	1
Thermostat	RWTT08	A319ABC-24-01	Johnson Controls	1
Condensing Unit	RUT520	FJCF-A050-IAA-201	Copeland	1
Compressor	RUT511	RS43C1E-IAA-100	Copeland	1
Condenser	RWCD37	066-0303-00	Copeland	1
Condenser Fan Blade	RWFB08	083-0130-00	Copeland	1
Condenser Fan Motor	RWCM27	050-0259-12	Copeland	1
Receiver	RWRT12	577-0346-02	Copeland	1
Start Capacitor	RWCP03	014-0008-57	Copeland	1
Run Capacitor	-	-	-	-
Relay	RWRLY02	040-0102-00	Copeland	1
Overload	RWOVL02	071-0329-15	Copeland	1
Filter Dryer	RWFD02	C-052-S	Sporlan	1
Sight Glass	RWSG01	SG-114	Watsco	1
Pressure Control	RWPL02	010-1483	Ranco	1
Power Control Switch	LWTS01	-	Cospolich	1
Terminal Box Assy	MT-001	-	Cospolich	1

Chapter 8

Installation

8.1 Unpacking

***Note**: Before unpacking the unit, note any crate markings and check for damage to crating. Notify the carrier if there should appear to be damage to the unit.*

The unit is shipped directly from the manufacturing factory securely fastened to a single pallet then protected by an external wrapping.

a. After inspection, carefully remove all external wrappings and other protective coverings.

b. Review the installation section of the manual completely prior to installing the unit.

c. Discard crating materials.

8.2 Installation

a. Before moving the unit to the installation sight, double-check passageways to ensure that the unit will move through without modification.

   ***Note**: In certain instances, it may be necessary to remove the doors and hardware. This will allow the unit to fit through tighter spaces.*

b. On most shipboard applications, a permanent base is fabricated by the ship builder to accommodate the base frame of the unit.

c. Position the unit to allow for sufficient ventilation. Typically, approximately 3" clearance from bulkheads and other equipment is sufficient. Try not to place the unit near heat producing items such as ovens, ranges, and furnaces.

d. Level the cabinet from front to back and side to side. This is important so that the cabinet will not be pulled out of square when securing it to the deck.

e. Evaporator coil drain lines are factory installed and are either plumbed into a condensate evaporator pan or the condensate evaporative base of the condensing unit to eliminate the need for exterior plumbing. Make certain that the drain outlet is located such that the condensate falls into the pan or base. On units with remotely located refrigeration, the condensate evaporator pan is optional.

f. Check the door gasket to make certain that it is sealing properly to the cabinet. Adjusting the latch strike or the hinges may be necessary to produce a tight seal.

g. Before applying electrical power to the unit, you should first check the electrical characteristics of the condensing unit to ensure that they agree with those of the electrical supply source.

CAUTION:
Low or excessive voltage can severely damage the electrical system.

***Note**: Adjusting any valves or controls on the system is not necessary and may void your warranty. All valves and controls have been set by the factory.*

Chapter 9

Electrical and Mechanical

9.1 Introduction

This section of the manual contains drawings and schematics of the electrical and mechanical piping systems.

9.2 Electrical Abbreviations and Terminology

a. RLA – Rated Load Amperage

1. Rated load amps is a measure of the current drawn by a compressor when operated at compressor manufacturer rating conditions at nominal voltage. This value is listed at U.L. and C.S.A. as "RLA". It is in agreement with the N.E.C. definition that the RLA be the current draw when the compressor is delivering rated output.

b. LRA – Locked Rotor Amperage

1. The locked rotor amps of a compressor is the current value recorded three seconds after rated voltage is applied under locked rotor conditions from a 75 degree Fahrenheit motor soakout temperature (The voltage drop is to be predetermined and adjusted accordingly prior to testing). This value appears on the compressor serial plate and on all compressor statistics sheets.
2. It may be well to note that the practice in the past was to show an additional column marked, "LRA U.L. Test Report". This is no longer needed since the U.L. investigation work, regarding component rating, will be guided by the compressor manufacturer's published value.

c. MCG – Maximum Continuous Current

1. Maximum continuous current is a limiting ampere value that must not be greater than 156% of the RLA of the compressor as marked on the nameplate of the particular unit into which that compressor is applied.

Table 9.1 – Operating Pressures

Refrigerant: R-12			
Cabinet	**Ambient**	**Suction Pressure**	**Head Pressure**
-5 degrees F (Fre.)	90 degrees F	0-10 lbs.	120-150 lbs.
37 degrees F (Ref.)	90 degrees F	18-35 lbs.	120-150 lbs.
Refrigerant: R-22			
Cabinet	**Ambient**	**Suction Pressure**	**Head Pressure**
-5 degrees F (Fre.)	90 degrees F	10-15 lbs.	200-250 lbs.
37 degrees F (Ref.)	90 degrees F	37-67 lbs.	200-250 lbs.
Refrigerant: 134A			
Cabinet	**Ambient**	**Suction Pressure**	**Head Pressure**
-5 degrees F (Fre.)	90 degrees F	-5-10 lbs.	120-150 lbs.
37 degrees F (Ref.)	90 degrees F	16-37 lbs.	120-150 lbs.
Refrigerant: 404A			
Cabinet	**Ambient**	**Suction Pressure**	**Head Pressure**
-5 degrees F (Fre.)	90 degrees F	15-20 lbs.	250-300 lbs.
37 degrees F (Ref.)	90 degrees F	68-84 lbs.	250-300 lbs.

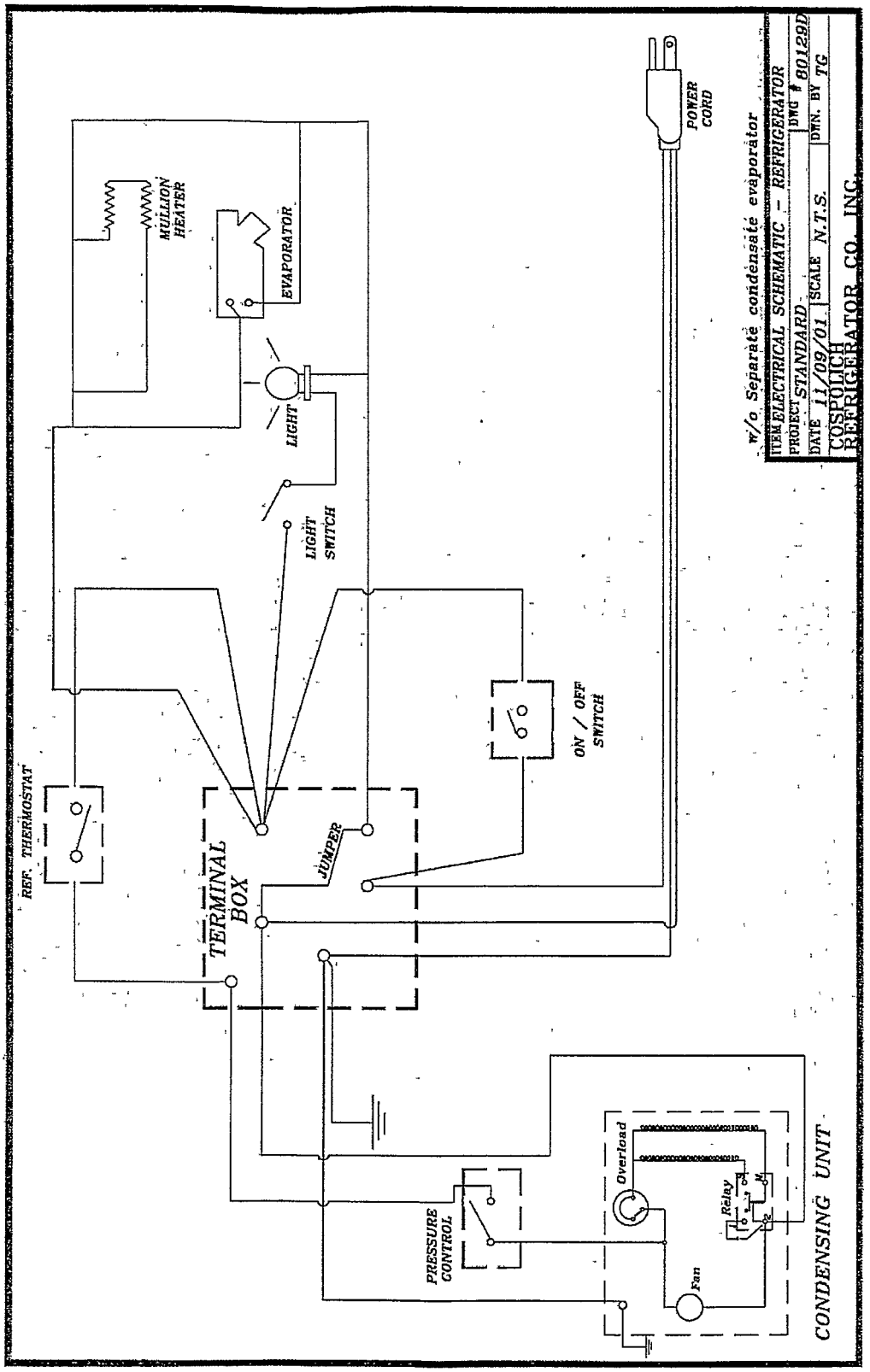

Figure 9.1 – Electrical Schematic

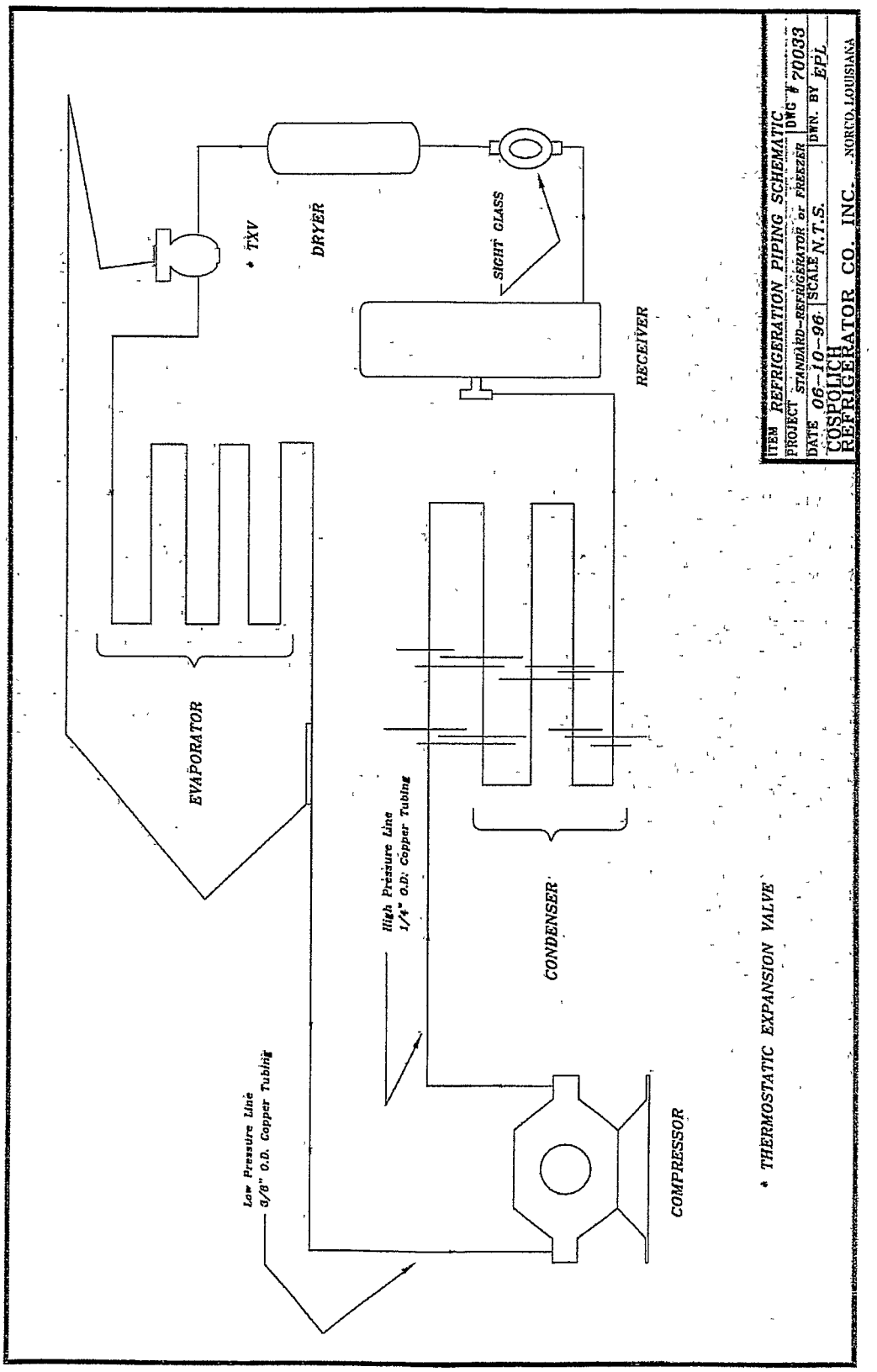

Figure 9.2 – Refrigeration Piping Schematic

Chapter 10

Limited Warranty

10.1 Introduction

Cospolich warrants their cabinets and units to consumers only against defects in material or workmanship under normal use and service for a period of one year from the date of shipment. Cospolich will repair or replace at their option, any part, assembly, or portion thereof, which, by their examination, is deemed to be defective. Cospolich will pay the labor costs for the repair up to twelve (12) months from the date of shipment.

10.2 Terms

10.2.1 Exclusions

a. Cospolich's obligations under this warranty shall not extend to any malfunction or other problem caused by unreasonable use, such as, but not limited to, improper setting of controls, improper installation, improper voltage supply, loose electrical connections or blown fuses, and damage not attributable to a defect in workmanship. This warranty will not apply to any cabinet or component part that has been subject to any accident, abuse, misuse, damage caused by fire or floor or any other act of God, and to any product serviced by an unauthorized service person or company.

10.2.2 To Secure Warranty Service

a. To claim a defect under this warranty, direct your claim to whomever you purchased the product. Be prepared to provide the model number, serial number, and a description of the problem.

b. If the above procedure fails to satisfy your claim, you may write directly to the **Director of Customer Relations, Cospolich, Inc., P.O. Box 1206, Destrehan, LA 70047**. Again, please provide the model number, serial number, and a description of the problem.

Note:

There is no other express warranty on Cospolich units except as stated herein. Any implied warrants of fitness and merchantability are limited in duration to the duration of this warranty. The liabilities of Cospolich are limited solely and exclusively to replacement as stated herein and do not include any liability for any incidental, consequential, or other damages of any kind whatsoever, whether any claim is based

upon theories of contract negligence or tort. Some states do not allow limitations on how long an implied warranty lasts, or the exclusion of limitations of incidental or consequential damages. So, the above limitations and exclusions may not apply to you. This warranty gives you specific legal rights and you may also have other rights that vary from state to state.

ASSEMBLY

Appendix A

Assembly and Installation Instructions

Modular Units

Cospolich Refrigerator Company, Inc.
Norco, LA 70079
800-423-7761

Note:

If this manual is for a ***Hot Food Counter*** *or* ***Dry Storage Cabinet****, please proceed to page 8 of this section.*

Assembly and Installation Instructions (Refrigerated Units)

Item: Modular Unit

Scope:

These instructions were prepared to assist in the assembly and installation of a Cospolich Modular unit. Should any questions arise regarding the assembly or installation, it is suggested that the factory be contacted.

Required Tools:

1. Panel Lock Wrench (included)
2. Standard Screwdriver (included)
3. Caulking Gun (included)
4. ¼" Nut Driver (included)
5. Philips Screwdriver (included)
6. 3/8" Nut Driver (included)
7. Quick Connect Wrenches (2) (included)
8. 5/16" Socket and Ratchet
9. Crescent Wrench

Uncrating:

1. Remove all wrappings and packaging materials.
2. Inspect unit to make certain that there is no damage.

Note:

Visually inspect the complete cabinet. It is recommended that all personnel involved with the installation of the unit(s) view the enclosed instructional video prior to doing anything. Before installation, run the unit for 24 hours. Be sure to unwrap the heater (for refrigerated units) before turning the unit on. Should it not achieve temperature or should the cabinet arrive in less than proper order, contact Cospolich immediately at (800) 423-7761 or (985) 725-0222.

Failure to pre-test and inspect may affect the equipment warranty.

WARNING:

Verify that the unit has NO power going to it prior to the disassembly process.

Disassembly:

1. Take the shelves, breaker strips, and the box of components out of the cabinet storage compartment.

2. *Doors:* Remove each door. To do this, use a flat screwdriver to pop off the side hinge covers. Use a Phillips screwdriver to remove the hinge screws that attach the door to the cabinet. Two people are required to perform this step. When the door(s) is removed, place it safely out of the way. In the instance that there is more than one door, mark each of them to ensure that they are re-installed over the same opening.

3. *Tubing cover(s):* Using the ¼" nut driver, remove the stainless steel, hex head screws that secure the rear tubing cover(s). The cover(s) will then be detached.

4. *Louvered grill(s):* Remove the ventilation grill(s) from the front and rear, where applicable, of the cabinet by lifting it up about ½", pulling the bottom of the grill out, and then down.

5. *Evaporator Coil Electrical:* Locate the evaporator coil on either the interior top or rear of the cabinet. Using a 5/16" socket or wrench, remove the fasteners securing the coil housing.

    a. *Sensors:* Remove the sensor cover and pull the sensor lead through the wall penetration.
    b. *Fan Harness:* Find the electrical line in the rear of the cabinet tagged "Fan Harness." Disconnect it from the other lead.

6. *Refrigeration Lines:* In the rear of the cabinet, locate the quick connect fittings on the refrigeration lines. Using the two wrenches provided, loosen the fittings. Continue the uncoupling process quickly to minimize the refrigerant loss.

7. *Removing the Condensing Unit:* Using a 5/16" ratchet, loosen and remove the mounting bolt located just below the condenser. This will allow the condensing unit to slide out of the compartment. Find the electrical lead to the condensing unit and disconnect it from the electrical control panel.

8. *Pre-charged Refrigerant Lines:* The refrigerant line set has self-sealing fittings on the ends. Using wrenches, loosen and remove the fittings from those locations. Once the fittings are disconnected, carefully remove the line set and place it out of the way. The affected fittings are appropriately tagged for re-installation.

9. Disassembling the Cabinet

   a. *Top:* Locate the camlock holes lining the interior ceiling seams. Insert the provided camlock wrench into the holes turning counter-clockwise until the cam opens. When all ceiling camlocks are released, lift the top straight up and remove. If the evaporator is mounted to the top, special care should be taken in the transport and storage of this part to ensure that there is no damage to the electrical or the coil itself.

      Note: *The polyurethane perimeter of each of the cabinet parts must not be dented, torn, or damaged. Use particular care when handling the parts.*

   b. *Ends:* With one installer supporting the end from the outside of the cabinet, disengage the camlocks in the same manner described above. Remove the panels and store safely.

   c. *Partition:* If the unit is constructed with a partition, either vertical or horizontal, the same procedures should be followed to disassemble it.

   d. *Back:* With an installed supporting the back from the outside of the cabinet, disengage the camlocks and remove and store the back. If the evaporator is mounted to the back, special care should be taken in the transport and storage of this part to ensure that there is no damage to the electrical or the coil itself.

   e. *Base:* Disassembly is complete. Transport the base into the final assembly area.

      Note: *At this time, it may be advisable to familiarize yourself with all of the components and equipment. The alignment of all panels is critical and tight quarters in the final assembly location may add a degree of difficulty to the assembly process.*

Reassembly:

10. Transferring Components for Reassembly

    a. The utmost care should be taken when transferring the components to the assembly area. Do not allow the perimeter, polyurethane edge of the panels to be dented or torn, as this will affect the seal of the walls.

b. Particular care should be taken in handling and moving the components such that the panels do not get scratched or dented.

11. Positioning Components for Reassembly

a. Since the working area may be quite limited, it is suggested that, except for the base, the other components should be safely placed in an adjacent area for easy access as needed.

b. The assembly of the unit can be accomplished in the exact spot that the unit will be operating. This is provided that there is a minimum of 2" of clearance in the rear and top for installation.

c. The base should be placed in the position that the unit will be assembled.

12. Assembly Information

a. *Work Space:* It is suggested that there be 2 inches of clearance on the sides, back, and top to allow for ease in installing.

b. *Caulking:* A silicone caulking is furnished. It is to be applied along the stainless steel flanges and hardrail for sealing.

c. *Camlock Hook Position:* When preparing to attach one panel to another, make certain that the camlocks are in a fully extended position.

Note: *When the camlock is fully extended, it should be approximately 1 ½" from the top of the camlock hook to the top of the hardrail.*

13. Base Foundation

a. A strong and level foundation is essential to successfully installing the cabinet. Any imperfection in the foundation will limit the quality of the finished product.

b. Recommendation for the Foundation

i. The structural material that makes up the foundation must be capable of supporting the cabinet without deflection or movement of any type.

ii. The foundation must support the cabinet around the total perimeter.

iii. The foundation should be perfectly level.

iv. It is recommended that there be at least four attachment points of the cabinet base to the foundation.

14. Cabinet Assembly Process

a. *Base:* Place the base on a permanent foundation or in the general area of the equipment's final installation. Using the silicone sealant provided, place three ¼" beads on the rail of the base where the back wall part will be installed. One bead should be on each flange (interior and exterior) and one bead should be placed down the middle of the rail. The silicone should be applied just prior to assembling the panel.

b. *Rear:* With the cams fully extended, place the panel into its position on the base. Once in position, insert the camlock wrench into the holes and draw them closed by turning clockwise.

c. *Ends:* Place the three beads of silicone in the same manner described above on all female rails. With the cams fully extended, place the panel into its position on the base. Once in position, insert the camlock wrench into the holes and draw them closed by turning clockwise.

d. Install all other components using the same guidelines.

Note: *It is important to pay particular attention to ensure that all components are matching correctly and that all seams are closed tightly.*

e. *Top:* Make sure that all camlocks are fully extended in the ends and rear sections (and the partition, when applicable). Apply the silicone to the female rails. Place the top into place and lock the camlocks rear to front. Lock all cams.

Note: *At this point, examine the cabinet again. It should be square and all seams closed tightly.*

f. *Mullion Heater(s):* Locate the mullion heater(s) in the front of the base. Untie the heater and place it into the track around the perimeter of the door opening. The track is under the gray PVC primary breaker strip lining the opening. The heater should be placed on the side of the breaker facing out of the cabinet.

g. *Secondary Breaker Strips:* With the heater(s) in place, snap the secondary breaker strips into place. They simply snap over the primary breaker strips.

h. *Doors:* With assistance holding the door in place, line up the hinges with the hole positions on the cabinet and start the screws. Once all screws are in, tighten them. Carefully close the door, checking the latching assembly to make certain that it operates properly. Follow the same process in installing the other doors, where applicable.
With the door(s) in place, observe that the door(s) is aligned properly.

Note: *Unless the door(s) is aligned properly, it may not seal effectively.*

15. Electrical

a. Reinstall the electrical that was removed.

Note: *Make certain that all connections are tight and that none of the wires are pinched.*

16. Refrigeration

a. *Rear Connection:* Make the connection of the lines exiting the cabinet to the spiral refrigeration line section first. Wrap well with the tubing insulation provided.

b. *Pre-charged Refrigeration Lines:* With the condensing unit and evaporator coil in position, reconnect the pre-charged tubing lines. Make certain that the 3/8" suction lines are connected to the 3/8" tubing line and do the same for the ¼" lines. Also, connect the condensing unit cord into the electrical control panel.

Note: *Each fitting on the line set is coded similarly to the matching fitting on either the condensing unit(s) or evaporator coil(s).*

c. *Condensing Unit(s):* Place the condensing unit(s) on the deck in front of the cabinet with the condenser(s) facing away from the cabinet. Locate the spiral refrigeration lines at the rear and move them forward. Use the furnished wrenches to make the connections. Place the condensing unit inside of the refrigeration compartment and bolt it down.

Reattach the electrical to the control enclosures.

Suggestion: *Leak check all lines and connections. To do this, apply a small amount of leak detecting fluid on each of the connections.*

d. *Rear Line Cover:* Install the rear line cover using the #8 x ½" hex screws provided.

17. *Drain Line:* In the interior of the cabinet, connect the ½" clear vinyl tubing to the bottom line on the evaporator coil. Replace the drain line cover(s) back into place. On the other end of the drain, ensure that the line has a piece of copper tubing in it and that it is situated such that the liquid will flow into the condensate evaporator pan or the evaporative base of the condensing unit.

    Note: *This will not apply on remotely located refrigeration systems.*

18. *Cam Access Hole Covers:* Grey vinyl caps are provided in the supplied package. Snap the caps into all of the cam access holes in the interior of the cabinet to prevent moisture exposure in the walls.

19. *Shelves:* Install the shelves at the desired heights. In lieu of shelves, some units may have pans or racks.

20. *System Start Up:* Prior to starting, review the operating instructions.

Final Check List:

1. With the cabinet in position, slide the condensing unit(s) back out and start the system. Allow it to run for 5 minutes then check the liquid sight glass for bubbles. A clear glass indicates that the system is fully charged.

   Note: *When this check is complete, turn the unit off and slide the condensing unit back into place and secure it.*

   Note: *Temperature controls are factory set and should* ***not*** *be readjusted.*

Assembly and Installation Instructions (HFC's and Dry Storage)

Item: Hot Food Counter of Dry Storage Cabinet

Scope:

These instructions were prepared to assist in the assembly and installation of a Cospolich Hot Food Counter or Dry Storage unit. Should any questions arise regarding the assembly or installation, it is suggested that the factory be contacted.

Required Tools:

1. 7/16" socket and ratchet or open-end wrench
2. Flat blade screwdriver

Uncrating:

1. Remove all wrappings and packaging materials.
2. Inspect unit to make certain that there is no damage.

Note:

Visually inspect the complete cabinet. Before installation, run the unit for 24 hours. Should it not achieve temperature or should the cabinet arrive in less than proper order, contact Cospolich immediately at (800) 423-7761 or (985) 725-0222.

Failure to pre-test and inspect may affect the equipment warranty.

WARNING:

Verify that the unit has NO power going to it prior to the disassembly process.

Disassembly:

1. If the unit contains shelves, remove them and store them in a safe place.

2. Remove all accessories (display top, work top, tray rail, plate dispensers, etc.) when applicable.

3. Unplug all polarized electrical connections. This is applicable only for Hot Food Counters. In the storage compartment, there are electrical connections located near the main panel and behind every hot well switch.

4. Disconnect the drain line(s) (when applicable).

5. Remove the top. If the top contains hot wells, remove the top with the wells in place. The top is removed by unbolting it from the rest of the panels. From the inside of the cabinet, locate the bolts on the flanges located around the perimeter of the cabinet. Remove all bolts using the 7/16" socket or open-end wrench. In some instances, a socket and ratchet will not fit given the tight space constraint.

6. Remove the bottom pans.

7. Remove one of the ends. Some ends will also contain a door. Leaving the door attached, remove the end by unbolting as before.

8. With the end removed, the angled base frame can be removed. Remove any bolts securing the frame to the cabinet. The frame can now be removed by sliding it out from the end.

9. Remove the other end.

10. Remove the front. The front may contain door(s) and mullions. If this is the case, keep the front completely in tact and remove all of the pieces together.

11. Remove the back.

> ***Note:*** *At this time, it may be advisable to familiarize yourself with all of the components and equipment. The alignment of all panels is critical and tight quarters in the final assembly location may add a degree of difficulty to the assembly process.*

Reassembly:

12. Transferring Components for Reassembly

    a. The utmost care should be taken when transferring the components to the assembly area. Do not allow the perimeter of the panels to be dented, as this will affect the fit of the final assembly.

    b. Particular care should be taken in handling and moving the components such that the panels do not get scratched or dented.

13. Positioning Components for Reassembly

    a. Since the working area may be quite limited, it is suggested that the components be safely placed in an adjacent area for easy access as needed.

    b. The assembly of the unit can be accomplished in the exact spot that the unit will be operating. This is provided that there is a minimum of 2" of clearance in the rear and top for installation.

14. Assembly Information

    a. *Work Space:* It is suggested that there be 2 inches of clearance on the sides, back, and top to allow for ease in installing.

15. Base Foundation

    a. A strong and level foundation is essential to successfully installing the cabinet. Any imperfection in the foundation will limit the quality of the finished product.

    b. Recommendation for the Foundation

        i. The structural material that makes up the foundation must be capable of supporting the cabinet without deflection or movement of any type.

        ii. The foundation must support the cabinet around the total perimeter.

        iii. The foundation should be perfectly level.

        iv. It is recommended that there be at least four attachment points of the cabinet base to the foundation.

16. Cabinet Assembly Process

    a. Reassemble all of the components in the reverse order that they were disassembled.

       Note: *It is important to pay particular attention to ensure that all components are matching correctly and that all seams are closed tightly.*

17. Electrical

    a. Reinstall the electrical that was removed.

       Note: *Make certain that all connections are tight and that none of the wires are pinched.*

Appendix C

Motor Characteristics & Performance Data

Newport News
CVN

Cospolich Refrigerator Company, Inc.
Norco, LA 70079
800-423-7761

MOTOR CHARACTERISTICS AND PERFORMANCE DATA

EQUIPMENT MANUFACTURER & P/N	COSPOLICH RWCM27
MANUFACTURER	EMERSON ELECTRIC
MASTER DRAWING	050-C012-00
CERTIFICATION DATA	UL LISTED
AUXILIARY	NONE
EQUIPMENT MODEL NO.	COSPOLICH R41-2M-SN & R41-2M-SN-MLR
QUANTITY	ONE
RATING (HP, VOLTS, PHASE)	9 WATTS, 115 VAC, 1 PHASE
INSULATION	B
WEIGHT	2.5 POUNDS
CYCLES	60
DESIGN	1550 RPM
TORQUE-STARTING	
FULL LOAD	
AMPERES- STARTING	
FULL LOAD	
POWER FACTOR	
ENCLOSURE	CAST ALUMINUM
SERVICE	
DUTY	EITHER CONTINUOUS OR INTERMITTENT
TYPE	SHADED POLE
AMBIENT	40 DEGREES C
F.L. KW	.048 KW
MOTOR FRAME	51
EFFICIENCY	30%

MOTOR CHARACTERISTICS & PERFORMANCE DATA

EQUIPMENT MANUFACTURER AND P/N	COSPOLICH	RWEM03
MANUFACTURER	UPPCO	
MASTER DRAWING	25300701	
CERTIFICATION DATA	UL LISTED	
AUXILIARY	NONE	
EQUIPMENT MODEL NO.	COSPOLICH	R41-2M-SN & R41-2M-SN-MLR
QUANTITY	ONE	
RATING (HP, VOLTS, PHASE)	115 VAC, 1 PHASE	
INSULATION	CLASS A	
WEIGHT	1.2 POUNDS	
CYCLES	60	
DESIGN	3000 RPM	
TORQUE-STARTING	30%	
FULL LOAD		
AMPERES- STARTING	1.4	
FULL LOAD	0.8	
POWER FACTOR		
ENCLOSURE	SKELETON	
SERVICE		
DUTY.	EITHER CONTINUOUS OR INTERMITTENT	
TYPE	SHADED POLE	
AMBIENT	40 DEGREES C	
F.L. KW	.048 KW	
MOTOR FRAME	C	
EFFICIENCY	40%	

CONTROLLER DATA

MANUFACTURER	Cospolich/ Johnson Controls
MASTER DRAWING	RWTT08/A319
CERTIFICATION DATA	UL Listed
RATING (HP, VOLTS, PHASE)	120/220VAC 1 Phase 24 Amps
SIZE	NONE
OPERATION	Normally open
TYPE	Temperature control
FUNCTION	Normally open
DUTY	Continuous
LOW-VOLTAGE FEATURE	None
OVERLOAD RELAY	None
HEATER CATOLOG #	
TYPE	
EMERGENCY RUN (YES/NO)	
AMBIENT DEGREES C	Unknown
ENCLOSURE	NEMA 1
WEIGHT	1 pound
EQUIPMENT SPECIFICATION	
LOCATION	Unknown
QUANTITY	One
WEIGHT	
EQUIPMENT SPECIFICATION	
LOCATION	
QUANTITY	

MOTOR CHARACTERISTICS AND PERFORMANCE DATA

EQUIPMENT MANUFACTURER & P/N	COSPOLICH RWCM38
MANUFACTURER	EMERSON ELECTRIC
MASTER DRAWING	050-0244-01
CERTIFICATION DATA	UL LISTED
AUXILIARY	NONE
EQUIPMENT MODEL NO.	COSPOLICH F41-2M-SN & F41-2M-SN-MLR
QUANTITY	ONE
RATING (HP, VOLTS, PHASE)	9 WATTS, 115 VAC, 1 PHASE
INSULATION	B
WEIGHT	2.5 POUNDS
CYCLES	60
DESIGN	1550 RPM
TORQUE-STARTING FULL LOAD	
AMPERES- STARTING FULL LOAD	
POWER FACTOR	
ENCLOSURE	CAST ALUMINUM
SERVICE	
DUTY	EITHER CONTINUOUS OR INTERMITTENT
TYPE	SHADED POLE
AMBIENT	40 DEGREES C
F.L. KW	.048 KW
MOTOR FRAME	51
EFFICIENCY	30%

Appendix D

General Arrangement
Drawing

Newport News
CVN

Cospolich Refrigerator Company, Inc.
Norco, LA 70079
800-423-7761

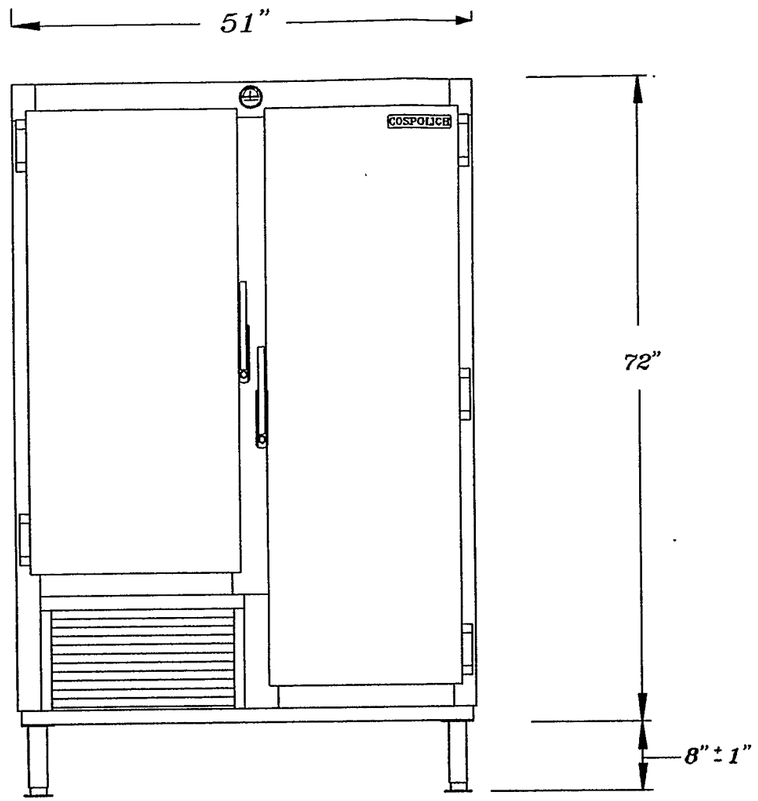

ELEVATION

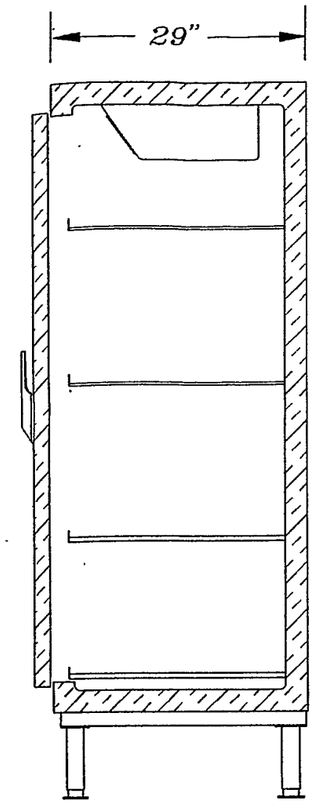

VERTICAL SECTION

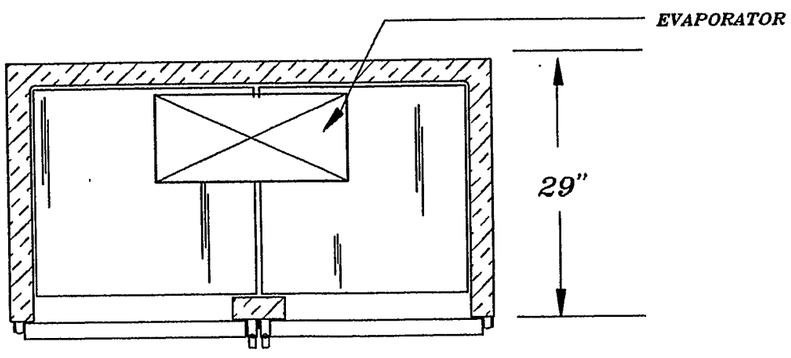

HORIZONTAL SECTION

MODEL *R41-2M-SN*

SPECIFICATION

DIMENSIONS: Width *51"* Depth *29"* Height *72"*

FINISH: Exterior (Exposed) *S.S.* Interior *S.S.*

INSULATION: *POLYURETHANE, FOAMED-IN-PLACE*

REFRIGERATION: *404A REFRIGERANT*

ELECTRICAL: *115VAC, 1 PHASE, 60 hz*

SPECIAL PROVISIONING:
Legs will be 8" high at mid adjustment point.

Latches will be Kason 533D, in lieu of 1279 & 1278, which ae obsolete.

NOTES:

REVISIONS:

Fabrication can proceed according to these specification, except as noted:

Approved By: _____

Date: _____

ITEM *SHIPBOARD REFRIGERATOR*		
PROJECT *Newport News (CVN-76)*		DWG # *50230*
DATE *10-08-96*	SCALE *N.T.S.*	DWN. BY *EPL*
COSPOLICH REFRIGERATOR CO. INC.		KENNER, LOUISIANA 70062

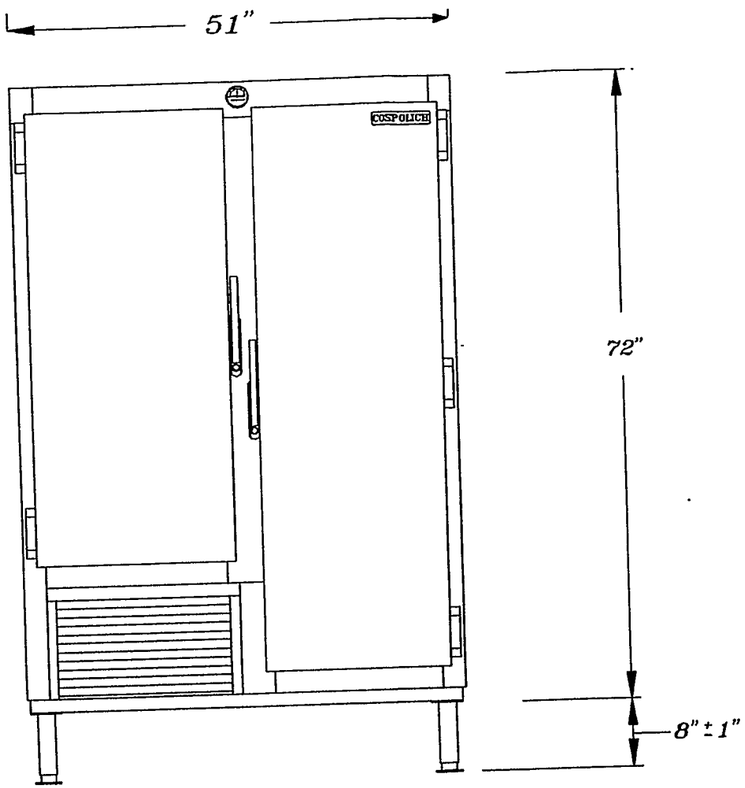

ELEVATION

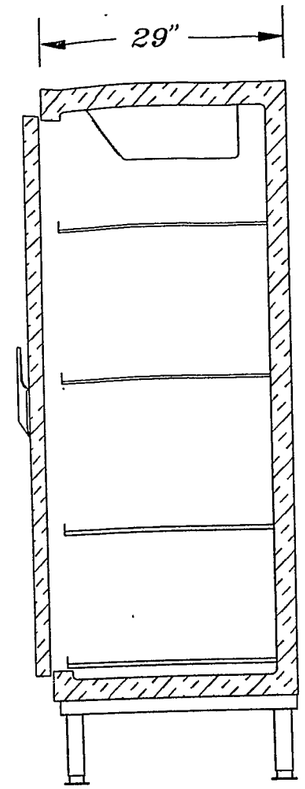

VERTICAL SECTION

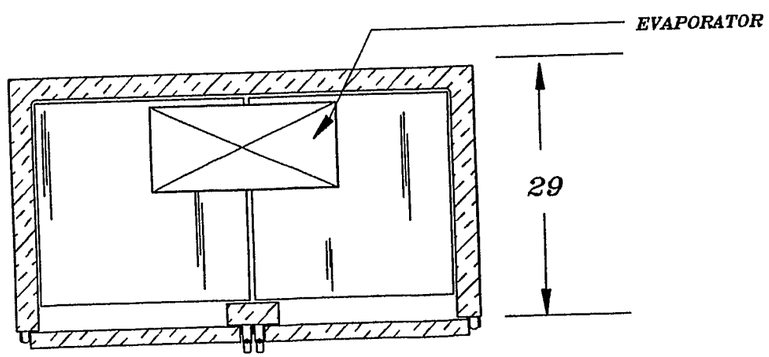

HORIZONTAL SECTION

MODEL *F41-2M-SN*

SPECIFICATION

DIMENSIONS: Width *51"* Depth *29"* Height *72"*

FINISH: Exterior (Exposed) *S.S.* Interior *S.S.*

INSULATION: *POLYURETHANE, FOAMED-IN-PLACE*

REFRIGERATION: *404A REFRIGERANT*

ELECTRICAL: *115VAC, 1 PHASE, 60 hz*

SPECIAL PROVISIONING:
Legs will be 8" high at mid adjustment point.

Latches will be Kason 533D, in lieu of 1279 & 1278, which ae obsolete.

NOTES:

REVISIONS:

Fabrication can proceed according to these specification, except as noted:

Approved By:

Date:

ITEM *SHIPBOARD FREEZER*		
PROJECT *Newport News (CVN-76)*		DWG # *50243*
DATE *10-08-96*	SCALE *N.T.S.*	DWN. BY *EPL*
COSPOLICH REFRIGERATOR CO. INC.		KENNER, LOUISIANA 70062

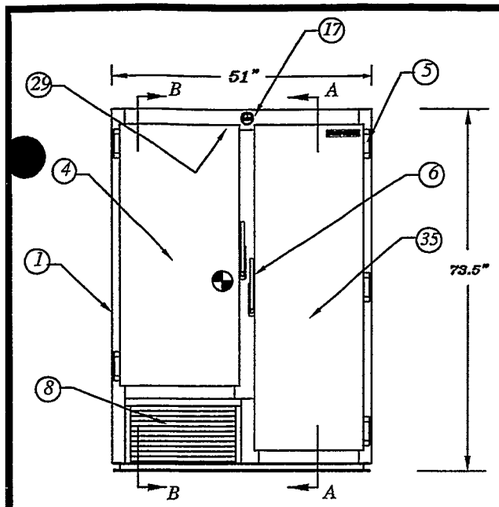

ELEVATION

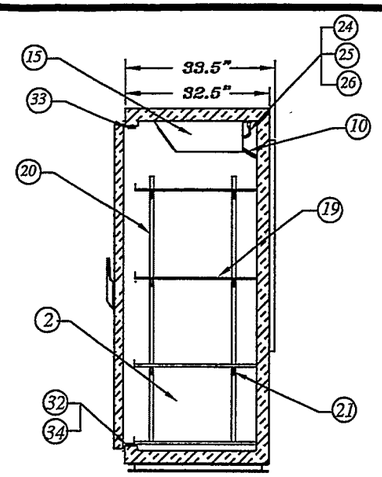

SECTION A–A

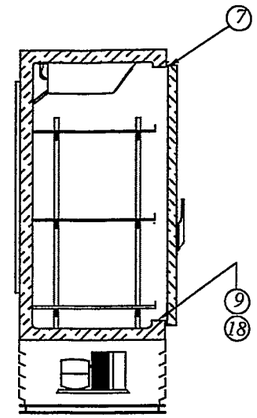

SECTION B–B

- NOTES -

1. ◐ : DENOTES CENTER OF GRAVITY (X,Y,Z)=(29,43,13)in.
2. WET WEIGHT: 713 lbs.
   DRY WEIGHT: 708 lbs.
3. REFRIGERATION: R-404A ; CHARGE: 22 oz.
4. ELECTRICAL: 115V , 13.7 AMPS
   MOTOR: 1/3HP

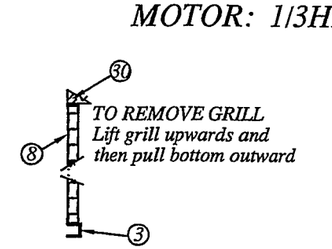

GRILL DETAIL

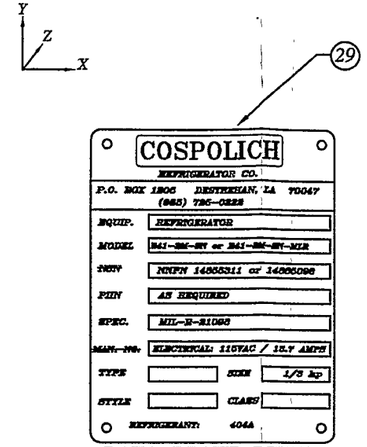

DATA PLATE DETAIL

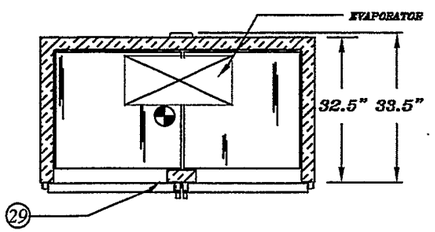

HORIZONTAL SECTION

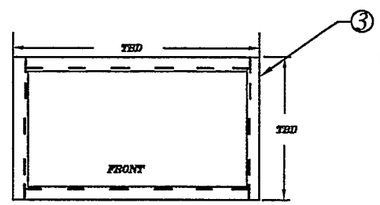

BASE FRAME
SCALE: NONE

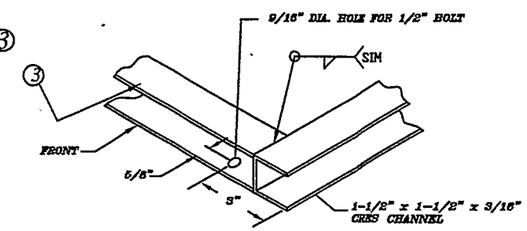

BASE PLAN

CORNER DETAIL
BASE

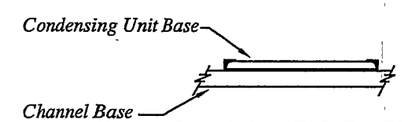

REMOVABLE COMPRESSOR DETAIL

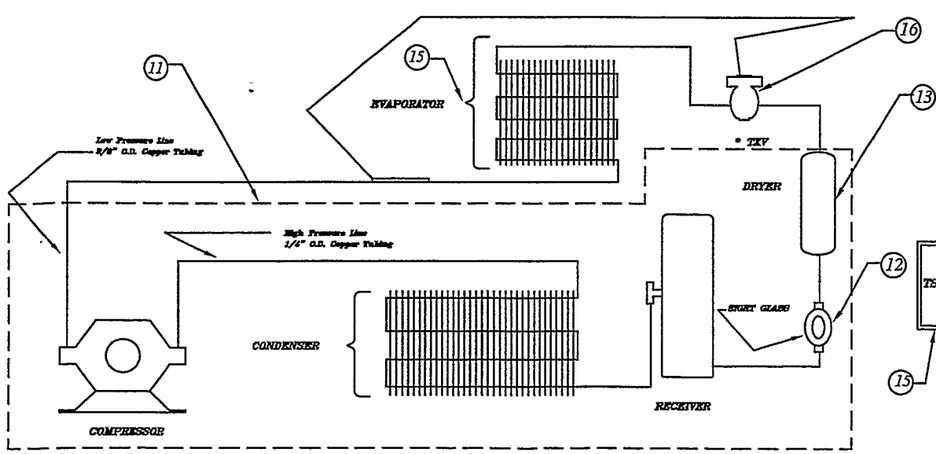

REFRIGERATION SCHEMATIC

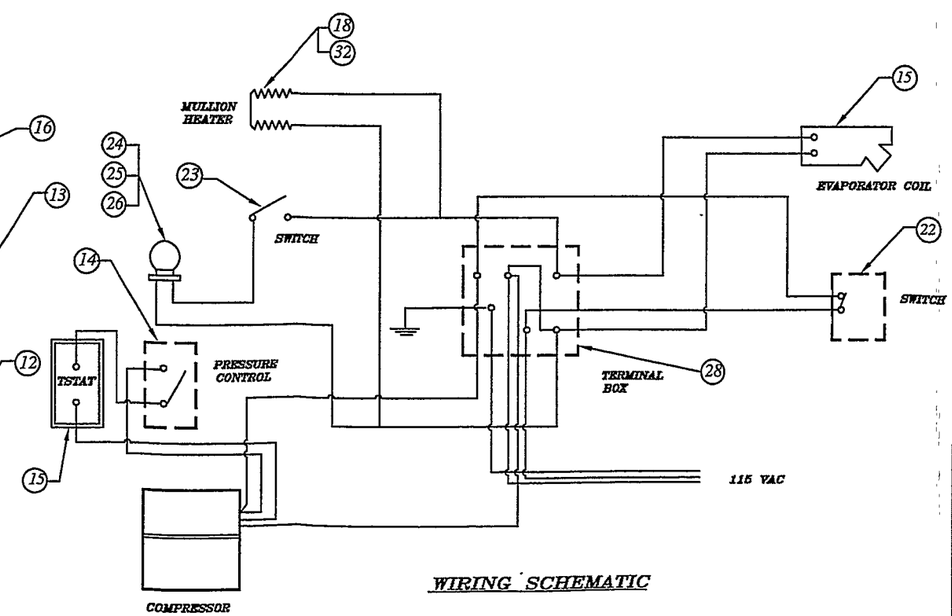

WIRING SCHEMATIC

REVISIONS

LTR	DESCRIPTION	DATE	APP
A	Changed base from legs to channel, added rear grill, added grill detail, deleted plug from schematic, changed latch to 533D, and added removable condensing unit detail.	03-30-98	
B	Changed base frame channel, added rear tubing cover, ext. end 31.5" and 32.5" to the tubing cover rear. changed from Item to sheet #007, changed PINN # to 4500001952, and located center of gravity, Changed to R41-2M-SN-MLR.	11-01-00	

ITM#	QTY	ITEM	MFG.	FSCM	OEM	SPEC.
35	1	DOOR	COSP	66682	DG65S	
34	1	BREAKER	COSP	66682	BG65V2	
33	1	GASKET	JEAN'S EXTRUSIONS	79264	GG65V	
32	1	HEATER, MULLION	SPRINGFIELD WIRE		L1HR167	
31	1	THERMOSTAT	JOHNSON CONTROLS		A319ABC-24-01	
30	AS REQ'D	INSULATION				
29	1	DATA PLATE				
28	1	TERMINAL BOX	EMF	66682	MT-001	
27		SPARE				
26	1	LAMP, 40 W	VARIOUS		LRSB01	
25	1	SOCKET LAMP	COMP. HDWR		L10-X003	
24	1	GUARD, LAMP	STDKIEL	87518	2778-1010-3000	
23	2	SWITCH, LIGHT (Non-Metallic)	VARIOUS		2767-1012-3000	
22	1	SWITCH, ON/OFF	VARIOUS		G22-725	
21	28	PILASTER CLIP	VARIOUS		66	
20	8	PILASTER	KASON	32761	65	
19	7	SHELF	NASHVILLE WIRE	45020	SSW22Bx23B	
18	1	HEATER MULLION	SPRINGFIELD WIRE	2K223	L1HR137	
17	1	THERMO-METER	MILOJCO	49048	20362002	
16	1	VALVE, TXV	SPORLAN	78462	FS114C	
15b	3	EVAP. MOTOR	BOHN	14852	25300701	
15a	3	EVAP. FAN	BOHN	14852	5101B	
15	1	EVAP., AIR	BOHN	14852	TA23AF	
14	1	CONTROL, PRESSURE	RANCO	50992	1483	
13	1	DRYER	SPORLAN	78462	C-052-S	
12	1	SIGHT GLASS	WATSCO	17529	SG-114	
11i	1	OVERLOAD	COPELAND	14569	071-0329-15	
11h	1	RELAY	COPELAND	14569	040-0102-00	
11g	1	RUN CAPACITOR	COPELAND	14569		
11f	1	START CAPACITOR	COPELAND	14569	014-0008-57	
11e	1	RECEIVER	COPELAND	14569	577-0346-02	
11d	1	CONDENSER FAN MOTOR	COPELAND	14569	050-0259-12	
11c	1	CONDENSER FAN BLADE	COPELAND	14569	083-0130-00	
11b	1	CONDENSER	COPELAND	14569	066-0303-00	
11a	1	COMPRESSOR	COPELAND	14569	RS43C1E-IAA-100	
11	1	COND. UNIT	COPELAND	14569	FJCF-A050-IAA-201	
10	1	DRAIN	COSP	66682		
9	1	BREAKER	COSP	66682	BG64V2	
8	2	GRILL, FRONT and REAR	COSP	66682	EG74S	ASTM A167
7	1	GASKET	JEAN'S EXTRUSIONS	79264	GG64V	
6	2	LATCH	KASON	32761	172BC	
5	5	HINGE	KASON	32761	217	
4	1	DOOR	COSP	66682	DG64S	ASTM A167
3	1	BASE FRAME	COSP	66682	CRES CHANNEL	
2	1	CABINET INT	COSP	66682	18GA S/S	ASTM A167
1	1	CABINET EXT	COSP	66682	20GA S/S	ASTM A167

ITEM	REFRIGERATOR	R41-2M-SN R41-2M-SN-MLR	
PROJECT	NEWPORT NEWS SHIPBLDG	DWG	50403
DATE 8/20/97	SCALE N.T.S	DWN. BY	GD
COSPOLICH REFRIGERATOR CO. INC. NORCO, LOUISIANA		REV.	B

CONVENTIONAL NNPN 14855311
MODULAR NNPN 14865098

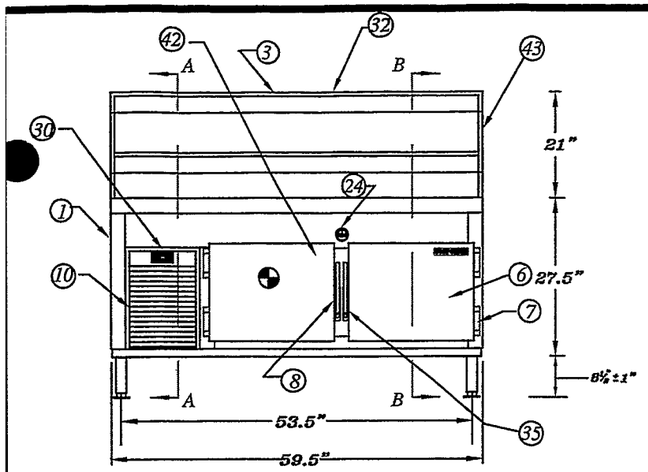

ELEVATION

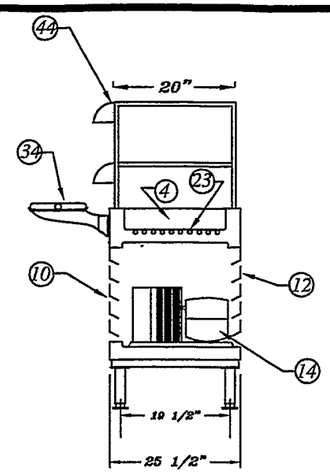

VERTICAL SECTION A–A

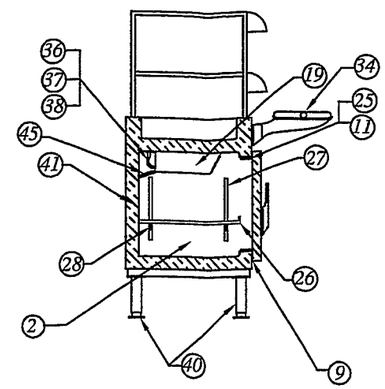

VERTICAL SECTION B–B

- NOTES -

1. ⊕ : DENOTES CENTER OF GRAVITY (X,Y,Z)=(27,26,12)in.
2. WET WEIGHT: 638 lbs.
   DRY WEIGHT: 633 lbs.
3. TRAY RAILS REMOVED FOR CLARITY, IN CLARITY IN THE ELEVATION VIEW
4. REFRIGERATION: R-404A ; CHARGE: 21oz.
5. ELECTRICAL: 115V , 8.3 AMPS
   MOTOR: 1/2HP
6. DRAIN FROM THE COLD PAN IS CONNECTED TO A FLEXIBLE HOSE, FURNISHED BY THE MANUFACTURER, LOCATED IN THE MACHINERY COMPARTMENT.
7. LATCHES TO BE PROVIDED WITH PROVISION FOR PADLOCKING

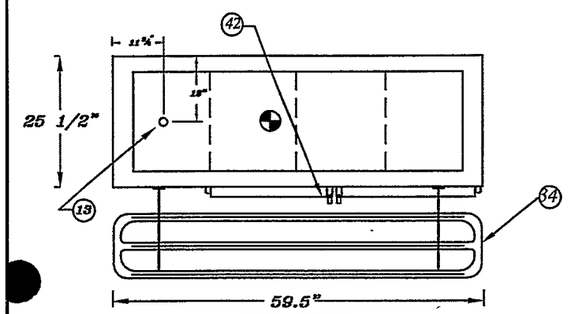

TOP VIEW

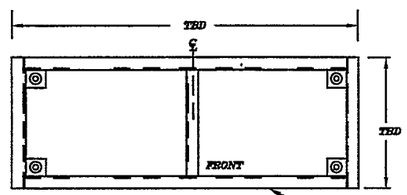

BASE FRAME
SCALE: NONE

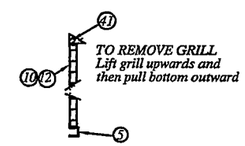

GRILL DETAIL

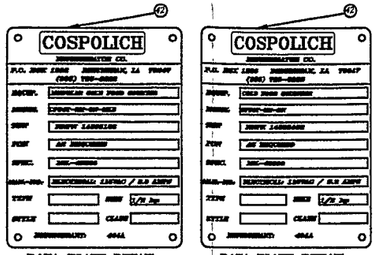

DATA PLATE DETAIL MODULAR CFC

DATA PLATE DETAIL CONVENTIONAL CFC

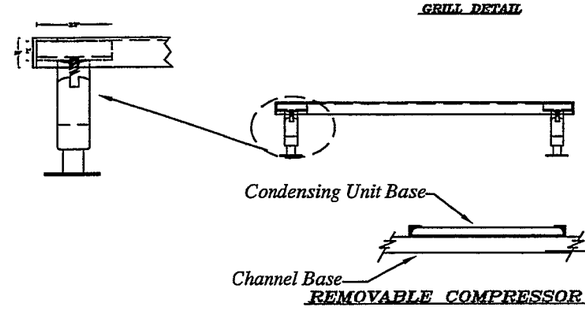

REMOVABLE COMPRESSOR DETAIL

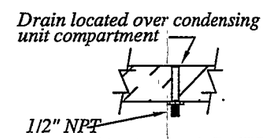

COLD–WELL DRAIN
DRAIN DETAIL

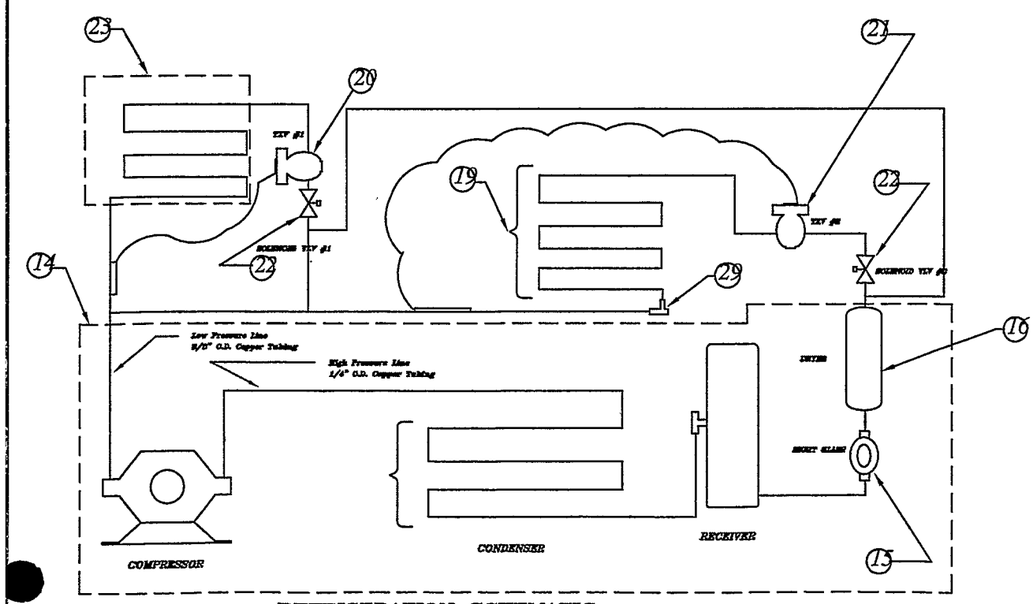

REFRIGERATION SCHEMATIC

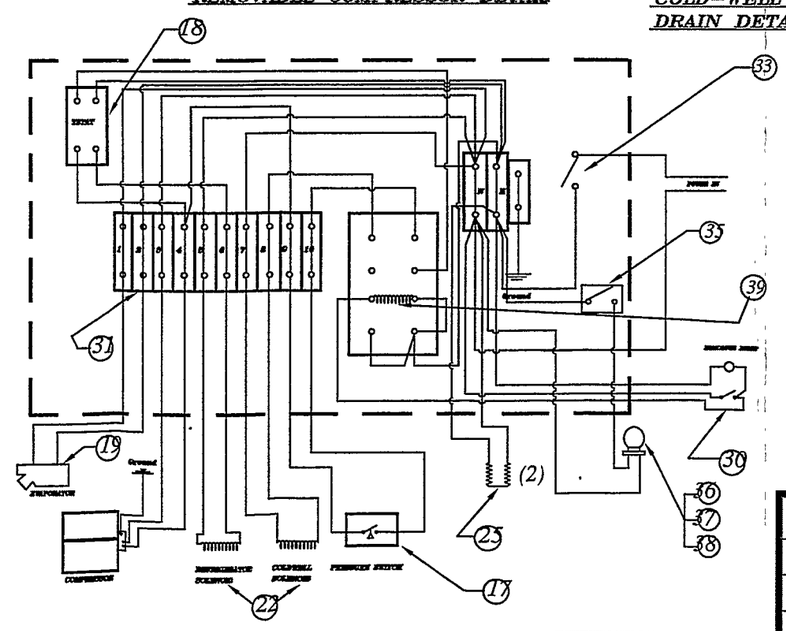

WIRING SCHEMATIC

REVISIONS

LTR	DESCRIPTION	DATE	APPROVED
A	Changed leg height to 8 1/2", indicated tray rail as folding, added grill, drain, and removable condensing unit detail. Changed latch to 533D.	03-30-96	
B.	Changed Base Frame and Leg detail, Changed item to Screw 010, Changed PINN # to 4500001952, Added NOTE #5 Drain from the cold fan is connected to a flexible hose located in the machinery compartment.	11-01-00	
C.	Added references to modular units on data plate and below title block	12-06-01	
D.	Added items to Elevation View, item to Base Frame, note 7, modified note 6, added modular data plate, cage code, modified description of items 19a, 19b, and 8.	04-09-02	

ITM#	QTY	ITEM	MFG.	FSCM	OEM	SPEC.
45	1	DRAIN	COSP	66682		
44	AS REQ'D	DISPLAY	COSP	66682	ACRYLIC	
43	1	S.S. TUBE	COSP	66682	DISPLAY	
42	1	DATA PLATE				
41	AS REQ'D	INSULATION				
40	4	LEGS	COMP. HDWR.	0TAA3	A54-4060-1	
39	1	RELAY, CONTROL PANEL	IDEC	60886	RH4UL120V	
38	1	LAMP, 40 W	VARIOUS		LRSB01	
37	1	SOCKET, LAMP	COMP. HDWR.	0TAA3	L10-X003	
36	1	GUARD, LAMP	STDKIEL	87518	2778-1010-3000	
35	2	SWITCH, LIGHT (Non-Metallic)	VARIOUS		2767-1012-3000	
34	1	TRAY SLIDE, FOLDING	COSP	66682		
33	1	SWITCH, ON/OFF	VARIOUS		G22-725	
32	1	DISPLAY, TOP	COSP	66682	HXDP4T	
31	1	TERMINAL BOX	COSP	66682	RCTL04	
30	1	SWITCH, COLDWELL	VARIOUS		G31-441	
29	1	VALVE, EPR	SPORLAN	78462	ORIT6	30/100 1/2 SAE
28	8	CLIP, PILASTER	KASON	32761	66	
27	8	PILASTER	KASON	32761	65	
26	2	SHELF	NASHVILLE WIRE	45020	SSW20B x 20B	
25	2	HEATER, MULLION	SPRINGFIELD WIRE		LIHR71	
24	1	THERMO-METER	MILJCO	49048	20362002	
23	1	EVAP, STATIC	COSP	66682		3/8" CU TUBE
22a	2	COIL, SOLE	SPORLAN	78462	MKC-1	115V
22	2	VALVE, SOLE	SPORLAN	78462	A3S1	1/4" odf
21	1	VALVE, TXV	SPORLAN	78462	FSII4C	
20	1	VALVE, TXV	SPORLAN	78462	FSII4Z	
19b	1	EVAP FAN	BOHN	14852	5101B	
19a	1	EVAP MOTOR	BOHN	14852	25300701	
19	1	EVAP, AIR	BOHN	14852	TA10AF	
18	1	THERMOSTAT	JOHNSON CONTROLS		A28AA-29C	
17	1	CONTROL, PRESSURE	RANCO	50992	1483	
16	1	DRYER	SPORLAN	78462	C-052-S	
15	1	SIGHT GLASS	WATSCO	17529	SG-114	
14i	1	OVERLOAD	COPELAND	14569	071-0329-15	
14h	1	RELAY	COPELAND	14569	040-0102-00	
14g	1	RUN CAPACITOR	COPELAND	14569		
14f	1	START CAPACITOR	COPELAND	14569	014-0008-57	
14e	1	RECIEVER	COPELAND	14569	577-0346-02	
14d	1	CONDENSER FAN MOTOR	COPELAND	14569	050-0259-12	
14c	1	CONDENSER FAN BLADE	COPELAND	14569	083-0130-00	
14b	1	CONDENSER	COPELAND	14569	066-0303-00	
14a	1	COMPRESSOR	COPELAND	14569	RS43C1E-IAA-10(	
14	1	COND. UNIT	COPELAND	14569	FJCF-A050-IAA-20I	
13	1	COLDWELL DRAIN	COSP	66682	E16-4174	
12	1	GRILL, REAR	COSP	66682	EQ78S	ASTM A167
11	1	BREAKER	COSP	66682	BC67V2	
10	1	GRILL, FRONT	COSP	66682	EQ77S	ASTM A167
9	2	GASKET	JEAN'S EXTRUSIONS	79264	GC67V	
8	2	LATCH	KASON	32761	533D	
7	4	HINGE	KASON	32761	217	
6	2	DOOR	COSP	66682	DC67S	ASTM A167
5	1	BASE FRAME	COSP	66682	M.S. ANGLE	
4	1	COLDWELL	COSP	66682	16GA SS	ASTM A167
3	1	TOP	COSP	66682	16GA SS	ASTM A167
2	1	CABINET INT	COSP	66682	20GA SS	ASTM A167
1	1	CABINET EXT	COSP	66682	18GA SS	ASTM A167

ITEM COLD FOOD COUNTER (4-TRAY)
CFC4T-2M-SN / CFC4T-2M-SN-MLR

PROJECT NEWPORT NEWS CVN | DWG 50410

DATE 8/20/97 | SCALE N.T.S. | DWN. BY GD

COSPOLICH REFRIGERATOR CO. INC. NORCO, LOUISIANA | REV. D

CAGE: 66682

CONVENTIONAL NNPN 14855402
MODULAR NNPN 14865106

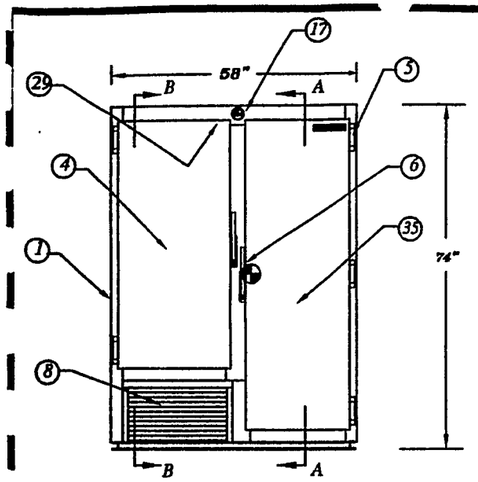

ELEVATION

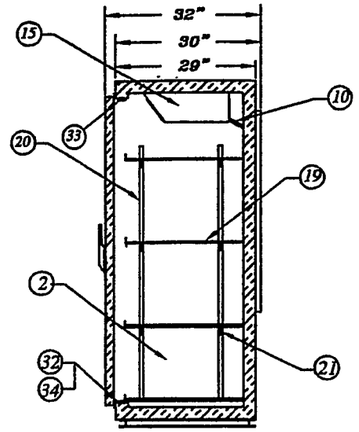

SECTION A–A

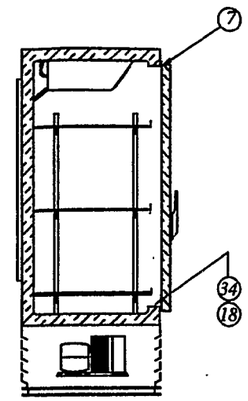

SECTION B–B

- NOTES -

1. ⊕ : DENOTES CENTER OF GRAVITY (X,Y,Z)=(27,40,15)in.
2. WET WEIGHT: 775bs.
   DRY WEIGHT: 770 lbs.
3. REFRIGERATION:
   R-404A ; CHARGE: 22 oz.
4. ELECTRICAL: 115V , 13.7 AMPS
   MOTOR: 1/3HP

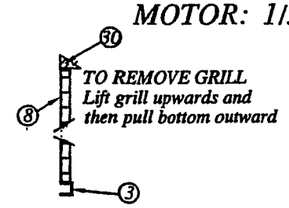

GRILL DETAIL

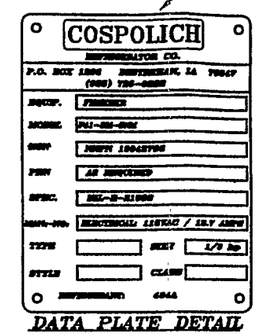

DATA PLATE DETAIL

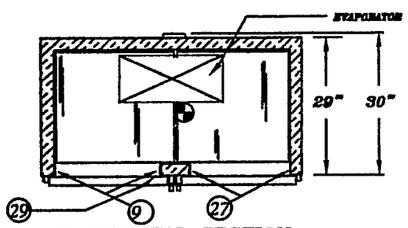

HORIZONTAL SECTION

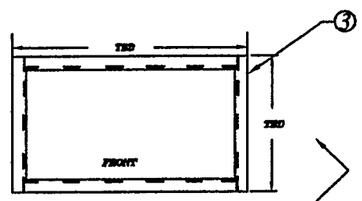

BASE FRAME
SCALE: NONE

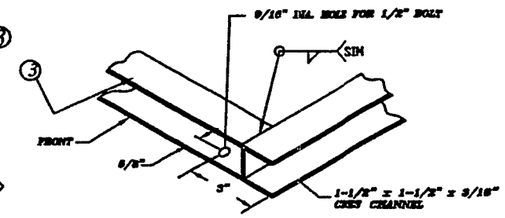

CORNER DETAIL
BASE

REMOVABLE COMPRESSOR DETAIL

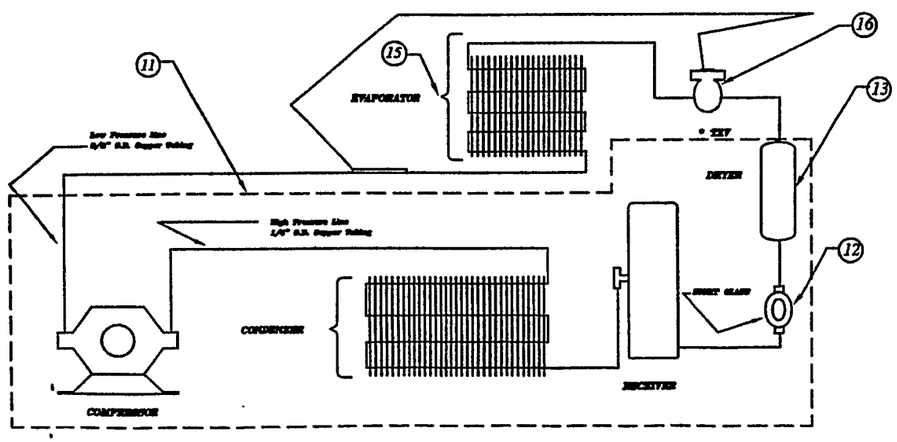

REFRIGERATION SCHEMATIC

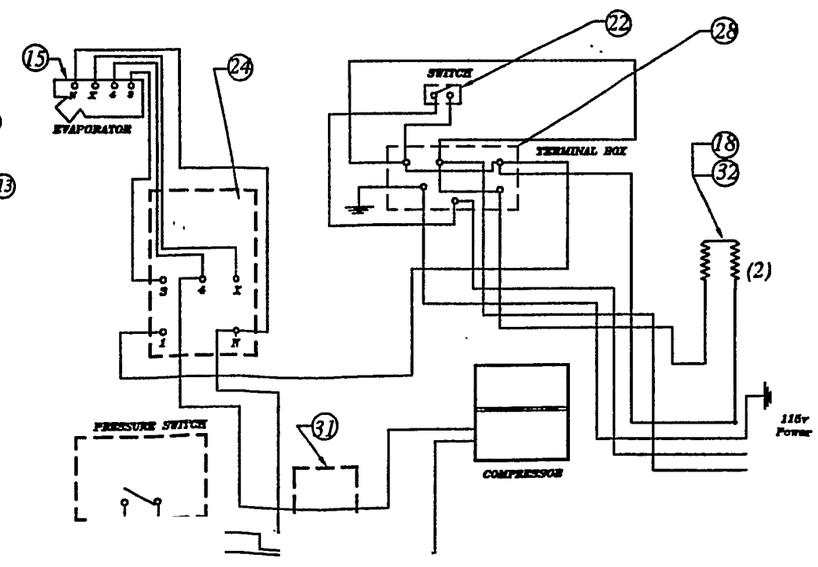

WIRING SCHEMATIC

REVISIONS

LTR	DESCRIPTION	DATE	APP

ITM#	QTY	ITEM	MFG.	FSCM	OEM	SPEC.
35	1	DOOR	COSP	66682	DG26x67	
34	4	BREAKER	COSP	66682	BG24	
33	1	GASKET	JEAN'S EXTRUSIONS	79264	GG25.5x66.75	
32	1	HEATER, MULLION	SPRINGFIELD WIRE	2K223	LIHR183	
31	1	THERMOSTAT	JOHNSON CONTROLS	92578	A319ABC-24-01	
30	AS REQ'D	INSULATION				
29	1	DATA PLATE				
28	1	TERMINAL BOX	EMF	-	MT-001	
27	2	BREAKER	COSP	66682	BG65.25"	
26		SPARE				
25		SPARE				
24	1	DEFROST TIMER	COSP	66682	8145-00	
23		SPARE				
22	1	SWITCH, ON/OFF	VARIOUS		G22-725	
21	28	PILASTER CLIP	VARIOUS		66	
20	8	PILASTER	KASON	32761	65	
19	7	SHELF	NASHVILLE WIRE	45020	SSW26x23B	
18	1	HEATER, MULLION	SPRINGFIELD WIRE	2K223	LIHR153	
17	1	THERMO-METER	MILOJCO	49048	20362002	
16	1	VALVE, TXV	SPORLAN	78462	FSII4Z	
15b	3	EVAP. MOTOR	BOHN	14852	25303201	
15a	3	EVAP. FAN	BOHN	14852	23100201	
15	1	EVAP., AIR	BOHN	14852	TL21AF	
14	1	CONTROL, PRESSURE	RANCO	50992	1483	
13	1	DRYER	SPORLAN	78462	C-052-S	
12	1	SIGHT GLASS	WATSCO	17529	SG-114	
11i	1	OVERLOAD	COPELAND	14569	071-0127-44	
11h	1	RELAY	COPELAND	14569	040-0088-06	
11g	1	RUN CAPACITOR	COPELAND	14569		
11f	1	START CAPACITOR	COPELAND	14569	014-0008-66	
11e	1	RECEIVER	COPELAND	14569	577-0390-01	
11d	1	CONDENSER FAN MOTOR	COPELAND	14569	050-0267-00	
11c	1	CONDENSER FAN BLADE	COPELAND	14569	083-0133-00	
11b	1	CONDENSER	COPELAND	14569	066-0303-01	
11a	1	COMPRESSOR	COPELAND	14569	RS64C1E-IAA-100	
11	1	COND. UNIT	COPELAND	14569	FICF-M075-IAA-200	
10	1	DRAIN	COSP	66682		
9	2	BREAKER	COSP	66682	BG50.25"	
8	2	GRILL, FRONT and REAR	COSP	66682	EG26.375 x 14.25	
7	1	GASKET	JEAN'S EXTRUSIONS	79264	CG25.5 x 51.75	
6	2	LATCH	KASON	32761	533D	
5	5	HINGE	KASON	32761	217	
4	1	DOOR	COSP	66682	DG26 x 52	ASTM A167
3	1	BASE FRAME	COSP	66682	CRES CHANNEL	
2	1	CABINET INT	COSP	66682	18GA S/S	ASTM A167
1	1	CABINET EXT	COSP	66682	20GA S/S	ASTM A167

ITEM	FREEZER	F41-2M-SNM	
PROJECT	NEWPORT NEWS SHIPBLDG	DWG	50692
DATE	5/10/02 SCALE N.T.S.	DWN. BY	EPL
		LOUISIANA	REV. -

CONVENTIONAL NNPN 13043790

(Insert Classification of Publication Here) CLASSIFICATION:
Ref: NAVSEAINST 4160.3A NAVSEA S0005AA-PRO-010/TMMP

NAVSEA/SPAWAR TECHNICAL MANUAL DEFICIENCY/EVALUATION REPORT (TMDER)

INSTRUCTION: Continue on 8 ½" x 11" paper if additional space is needed.

1. Use this report to indicate deficiencies, problems, and recommendations relating to a publication.
2. For CLASSIFIED TMDERs see OPNAVINST 5510H for mailing classified TMDERs.
3. Print clearly and carefully.
4. Submit TMDERs at web site http://nsdsa.phdnswc.navy.mil or mail to address on reverse.

1. PUBLICATION NO.	2. VOL/PART	3. REV/DATE or CHG/DATE	4. SYSTEM/EQUIPMENT ID

5. TITLE OF PUBLICATION	6. REPORT CONTROL NUMBER (6 digit UIC-YY-any four: xxxxxx-01-xxxx)

7. RECOMMENDED CHANGES TO PUBLICATION

7a Page #	7b Para #	7c RECOMMENDED CHANGES AND REASONS

8. ORIGINATOR'S NAME and WORK CENTER	9. DATE	10. PHONES Commercial/DSN/FAX Include extensions	11. TMMA of manual (NSDSA will complete)

12. Ship or Activity Name and Address (Include UIC/CAGE/HULL)	13. ORIGINATOR'S E-MAIL ADDRESS

NAVSEA 4160/1 (REV 3/2001)

FOLD HERE AND TAPE SECURELY
PLEASE DO NOT STAPLE

INCLUDE COMPLETE ADDRESS

USE
PROPER
POSTAGE

FOR OFFICIAL USE ONLY

COMMANDER
CODE 5E30DP BLDG 1388
NAVSURFWARCENDIV NSDSA
4363 MISSILE WAY
PORT HUENEME CA 93043-4307

FOLD HERE AND TAPE SECURELY
PLEASE DO NOT STAPLE

(Insert Classification of Publication Here) CLASSIFICATION:
Ref: NAVSEAINST 4160.3A NAVSEA S0005AA-PRO-010/TMMP

NAVSEA/SPAWAR TECHNICAL MANUAL DEFICIENCY/EVALUATION REPORT (TMDER)

INSTRUCTION: Continue on 8 ½" x 11" paper if additional space is needed.

1. Use this report to indicate deficiencies, problems, and recommendations relating to a publication.
2. For CLASSIFIED TMDERs see OPNAVINST 5510H for mailing classified TMDERs.
3. Print clearly and carefully.
4. Submit TMDERs at web site http://nsdsa.phdnswc.navy.mil or mail to address on reverse.

1. PUBLICATION NO.	2. VOL/PART	3. REV/DATE or CHG/DATE	4. SYSTEM/EQUIPMENT ID

5. TITLE OF PUBLICATION	6. REPORT CONTROL NUMBER (6 digit UIC-YY-any four: xxxxxx-01-xxxx)

7. RECOMMENDED CHANGES TO PUBLICATION

7a Page #	7b Para #	7c RECOMMENDED CHANGES AND REASONS

8. ORIGINATOR'S NAME and WORK CENTER	9. DATE	10. PHONES Commercial/DSN/FAX Include extensions	11. TMMA of manual (NSDSA will complete)

12. Ship or Activity Name and Address (Include UIC/CAGE/HULL)	13. ORIGINATOR'S E-MAIL ADDRESS

NAVSEA 4160/1 (REV 3/2001)

FOLD HERE AND TAPE SECURELY
PLEASE DO NOT STAPLE

INCLUDE COMPLETE ADDRESS

USE
PROPER
POSTAGE

FOR OFFICIAL USE ONLY

COMMANDER
CODE 5E30DP BLDG 1388
NAVSURFWARCENDIV NSDSA
4363 MISSILE WAY
PORT HUENEME CA 93043-4307

FOLD HERE AND TAPE SECURELY
PLEASE DO NOT STAPLE

(Insert Classification of Publication Here) CLASSIFICATION:
Ref: NAVSEAINST 4160.3A NAVSEA S0005AA-PRO-010/TMMP

NAVSEA/SPAWAR TECHNICAL MANUAL DEFICIENCY/EVALUATION REPORT (TMDER)

INSTRUCTION: Continue on 8 ½" x 11" paper if additional space is needed.

1. Use this report to indicate deficiencies, problems, and recommendations relating to a publication.
2. For CLASSIFIED TMDERs see OPNAVINST 5510H for mailing classified TMDERs.
3. Print clearly and carefully.
4. Submit TMDERs at web site http://nsdsa.phdnswc.navy.mil or mail to address on reverse.

1. PUBLICATION NO.	2. VOL/PART	3. REV/DATE or CHG/DATE	4. SYSTEM/EQUIPMENT ID

5. TITLE OF PUBLICATION	6. REPORT CONTROL NUMBER (6 digit UIC-YY-any four: xxxxxx-01-xxxx)

7. RECOMMENDED CHANGES TO PUBLICATION

7a Page #	7b Para #	7c RECOMMENDED CHANGES AND REASONS

8. ORIGINATOR'S NAME and WORK CENTER	9. DATE	10. PHONES Commercial/DSN/FAX Include extensions	11. TMMA of manual (NSDSA will complete)

12. Ship or Activity Name and Address (Include UIC/CAGE/HULL)	13. ORIGINATOR'S E-MAIL ADDRESS

NAVSEA 4160/1 (REV 3/2001)

FOLD HERE AND TAPE SECURELY
PLEASE DO NOT STAPLE

INCLUDE COMPLETE ADDRESS

USE
PROPER
POSTAGE

FOR OFFICIAL USE ONLY

COMMANDER
CODE 5E30DP BLDG 1388
NAVSURFWARCENDIV NSDSA
4363 MISSILE WAY
PORT HUENEME CA 93043-4307

FOLD HERE AND TAPE SECURELY
PLEASE DO NOT STAPLE

S6161-V7-FSE-010