S6161-DQ-FSE-010

0910-LP-104-8240

REVISION 2

TECHNICAL MANUAL
FOR
ICE CREAM MAKER, SOFT SERVE
MODELS SW4013E, SW4143E, SW4243E and A4243E

(SANISERV
CONTRACT N00024-98-C-2306)

DISTRIBUTION STATEMENT C: DISTRIBUTION AUTHORIZED TO U.S. GOVERNMENT AGENCIES AND THEIR CONTRACTORS ADMINISTRATIVE/OPERATIONAL USE; 11 NOVEMBER 2005. OTHER REQUEST FOR THIS DOCUMENT MUST BE REFERRED TO NAVAL SEA SYSTEMS COMMAND (SEA-09B2).

WARNING: THIS DOCUMENT CONTAINS TECHNICAL DATA WHOSE EXPORT IS RESTRICTED BY THE ARMS EXPORT CONTROL ACT (TITLE 22, U.S.C. SEC. 2751 ET SEQ.) OR THE EXPORT ADMINISTRATION ACT OF 1979, AS AMENDED, TITLE 50, U.S.C., APP 2401, ET SEQ. VIOLATIONS OF THESE EXPORT LAWS ARE SUBJECT TO SERVER PENALTIES.

DESTRUCTION NOTICE: DESTROY BY ANY METHOD THAT WILL PREVENT DISCLOSURE OF CONTENTS OR RECONSTRUCTION OF THE DOCUMENT.

THIS TECHNICAL MANUAL SUPERSEDES S6161-DQ-FSE-010 DATED FEBRUARY 4, 1992.

PUBLISHED BY DIRECTION OF COMMANDER, NAVAL SEA SYSTEMS COMMAND

FOR OFFICIAL USE ONLY

11 NOVEMBER 2005

0910-LP-104-8240

NAVSEA TECHNICAL MANUAL CERTIFICATION SHEET

Certification Applies to: New Manual ☐ Revision ☒ Change ☐

APPLICABLE TMINS/PUB. NO.	PUBLICATION DATE	READING GRADE LEVEL (RGL)
S6161-DQ-FSE-010 Revision 2	11 November, 2005	9th

TITLE:
ICE CREAM MAKER, SOFTSERV, MODELS SW4013E, SW4143E, SW4243E AND A4243E

TMCR/TMSR/SPECIFICATION NUMBER:
970151-000

CHANGES AND REVISIONS:

PURPOSE:
PURPOSE OF THE REVISION IS TO INCORPORATE THE INFORMATION FOR THE NEW MODEL A4243E.

EQUIPMENT ALTERATION NUMBERS INCORPORATED:

_____

TMDER/ACN NUMBERS INCORPORATED:

_____

Continue on additional pages as needed.

CERTIFICATION STATEMENT

This is to certify that responsible Navy activities have reviewed the above identified document for acquisition compliance, technical coverage, and printing quality. This form is for internal Government management use only, and does not imply contractual approval or acceptance of the technical manual by the Government, nor does it relieve the contractor of any responsibility for delivering the technical manual in accordance with the contract requirements.

AUTHORITY	NAME	SIGNATURE	ORGANIZATION	CODE	DATE
ACQUISITION	Ed Cousins	E Cousins	SUPSHIP Bath, ME	240	11/10/2005
TECHNICAL	Ed Cousins	E Cousins	SUPSHIP Bath, ME	240	11/10/2005
PRINTING RELEASE	Printed from Digital Media				

NAVSEA 4160/9 (REV 7-2003)

TABLE OF CONTENTS

Introduction 1

Glossary of Terms 2

Installation Instructions 5

Electrical Connections 6

Disassembly 7

Cleaning Instructions 10

Lubricating 11

Reassembly 12

Mix Pan Refrigeration Adjustment 12

Sanitizing 13

Charging and Starting 14

Torque Adjustment 15

Helpful Hints 17

Troubleshooting 18

Winter Storage 27

Exploded Views and Parts List 28

Vendor/Manufacturer Cross Reference Parts List 37B, 37C

Warranty Information 38

Parts Order Procedure 38

Parts Return Procedure 38

Component and Tubing Routings 39

Wiring Diagrams 41

Appendix (Model A4243E Information Only) 42

TABLE OF CONTENTS - CONTINUED

LIST OF ILLUSTRATIONS

Figure No.	Title	Page No.
1.	Leg Adjustment	5
2.	Location of Handy Box	6
3.	Carburetor Tube and Control Switch Location	8
4.	Auto/Cleanout Switch Positions	8
5.	Face Plate Knob Removal	9
6.	Dasher Assembly	9
7.	Scraper Blade Removal	9
8.	Front Plate Assembly	9
9.	O-Ring Removal	9
10.	Spigot Plunger Lubrication	11
11.	Dasher Lubrication	11
12.	Torque Control System	16
13.	Water Cooled Condenser Valve	27
14.	Model A4243E Exploded View (2 Sheets)	44
15.	Wiring Box (Model A4243E)	49
16	Electrical Schematic (Model A4243E)(2 Sheets)	51

SAFETY SUMMARY

GENERAL SAFETY NOTICES

The following general safety notices supplement the specific warnings and cautions appearing elsewhere in this manual. They are recommended precautions that must be understood and applied during operation and maintenance of the equipment covered herein. Should situations arise that are not covered in the general or specific safety precautions, the commanding officer or other authority will issue orders as deemed necessary to cover the situation.

DO NOT REPAIR OR ADJUST ALONE.

Under no circumstances should repair or adjustment of energized equipment be attempted alone. The immediate presence of someone capable of rendering aid is required. Before making adjustments, be sure to protect against grounding. If possible, adjustments should be made with one hand, with the other hand free and clear of the equipment. Even when power has been removed from equipment circuits, dangerous potentials may still exist due to retention of charges by capacitors. Circuits must be grounded and all capacitors discharged prior to attempting repairs.

TEST EQUIPMENT

Make certain test equipment is in good condition. If a test meter must be held, ground the case of the meter before starting measurement; do not touch live equipment or personnel working on live equipment while holding a test meter. Some types of measuring devices should not be grounded; these devices should not be held when taking measurements.

INTERLOCKS

Interlocks are provided for safety or personnel and equipment and should be used only for the purpose intended. They should not be battle shorted or otherwise modified except by authorized maintenance personnel. Do not depend solely upon interlocks for protection. Whenever possible, disconnect power at power distribution source.

Introduction

This manual has been prepared to assist in the training of your present personnel, as well as new personnel, on the proper operational procedures for your new SaniServ soft serve units.

All personnel should read this manual thoroughly and familiarize themselves with the machine before setting it up for operation.

This manual covers Models 4013E, 4143E, 4243E, SaniServ soft serve units. If you have a 4243E, the operational procedures are the same for both sides.

Please refer to the data plate on the back panel of your machine for the model number and other important information concerning your unit.

NOTE: Determing the various requirements of your machine by matching the model number and voltage requirements on the data plate (located on the back panel of your machine) with the chart provided below.

MACHINE IDENTIFICATION

MODEL NUMBER	**SW401**	**SW414**	**SW424**
NUMBER OF HEADS	1	1	2
COMPRESSOR HORSE POWER	1	2	2 (2)
DASHER HORSE POWER	1	1	1 (2)
APPROXIMATE GALLONS PER HOUR PER HEAD	10	16	16
VOLTAGE CODE	440/60/3Ø	440/60/3Ø	440/60/3Ø
WIDTH x DEPTH x HEIGHT	17.0 x 24.75 x 32.0	17.0 x 24.75 x 57.0	26.0 x 26.0 x 55.0
SHIPPING WEIGHT (LBS.)	270	360	665

Glossary of Terms

Ambient Temperature	The temperature of the air in the immediate vicinity of the operating freezer. High ambient temperature can reduce the capacity of a freezer with an air-cooled condenser. Likewise, high incoming cooling water temperature can reduce the capacity of a freezer with a water-cooled condenser.
Butterfat Milkfat Content	Percent of dairy fat contained in the mix or frozen product. Abbreviated as B.F.
Canned Mix	A liquid mix (usually dairy based) packed in such a way that it can be stored unrefrigerated for extended periods until it is opened.
Capacity (Freezer)	The total quantity of frozen product that a soft serve or shake freezer can produce in a given period, usually stated in gallons per hour (G.P.H.).
Carburetor Tube	A metering device for regulating the correct ratio of air and mix from the hopper to the freezing cylinder in a gravity style freezer.
Condenser	The part of the refrigeration mechanism that receives hot, high pressure refrigeration gas from the compressor and cools gaseous refrigerant until it returns to a liquid state. Condensers can utilize air or water as a cooling medium.
Dasher	The part of the freezer that scrapes frozen product off the inside of the freezing cylinder and blends air into it as it freezes. In a gravity freezer, the dasher assembly imparts forward thrust on the product so it can be dispensed.
Evaporator/Freeze Chamber/Barrel	The part of the refrigeration mechanism in which the refrigerant vaporizes and absorbs heat. This is the part of the freezer in which the liquid product is actually frozen.
Fresh Mix	Any mix that is still in its original container that has not been used in an ice cream maker, or previously frozen.
Gallonage	The number of gallons of soft serve mix used in a set period, such as a week, month or year. Gallonage helps to determine which freezer is most needed in a particular location. Knowledge of gallon usage of various types of businesses can help to estimate usage in new locations of similiar type, size and location.
Ice Cream	Dairy based product with more than 10% butterfat content. State regulations vary as to the exact legal definition of ice cream.

Ice Milk Dairy based product with less than 10% butterfat content.

Night Switch A special control that allows safe overnight storage of liquid mix and frozen product in the freezing cylinder.

Overrun The volumetric increase of soft serve from the liquid to the solid state due to the incorporation of air into the frozen product. Overrun is stated as a percentage.

Peak Demand Requirements The amount of frozen product needed to handle the busiest serving periods. Proper freezer selection is based on this requirement.

Powdered Mix Soft serve mix that is received and stored in a dry powder form. A liquid such as water, and possibly other ingredients, must be added before use.

Product Breakdown This term refers to the decline in frozen product quality resulting from over agitation or temperature variations of product that has stayed in the freezing cylinder too long. Product which has broken down may be grainy, wet, or heavy even if it is at the proper serving temperature.

Rerun The reuse of previously frozen soft serve after it has melted to a liquid. Usually, rerun is obtained when emptying a freezer for periodic cleaning. There is a danger in using re-run as it may contain a high bacteria or Coli count which could contaminate the fresh mix that is combined with. Also, if the re-run is broken down, it could “seed” the fresh mix causing poor product quality. Freezers should never be started with rerun. If used at all, it should be blended with fresh mix at a ratio of seven parts new mix with three parts old mix, after initial freeze-down with fresh mix.

Scraper Blade The component that scrapes the frozen product from the freezing cylinder walls. The blade must be sharp. Dull blades will leave product on the evaporator surface, which insulates the mix from the refrigerant.

Serving Temperature Proper soft serve and shake temperature varies due to the type and ingredients in the mix.

Soft Serve 17 to 22 degrees F.
Milk Shake 26 to 28 degrees F.

Soft Serve Any frozen product which is served or packaged in the soft state directly from the freezer regardless of butterfat or edible oilfat content.

Soft Serve Mix Any liquid mix that can be frozen to soft serve consistency in a freezer. This mix can be yogurt, ice milk, ice cream, sherbets, etc.

Spigot	The mechanism at the front of the freezing cylinder through which frozen product is dispensed.
Torque Control/ Consistency Control	A control that senses the thickness (viscosity) of the product in the freezing cylinder.
Watts	Watts = Voltage X Amperage
Yogurt	A cultured milk based frozen treat usually made using all natural ingredients. Yogurt contains a low butterfat content (around 1.5%) and a special bacteria culture, which gives it a tart flavor.

Installation Instructions

1. Remove the cardboard carton from the skid to which the machine is mounted for shipping.

2. Remove the bolts which attach the machine base to the wooden skid.

3. Tilt the machine so access to the threaded leg mounts is accessible.

4. Install the adjustable legs. Tighten the legs and level the machine. (See Figure 1).

5. Read the various tags attached inside and follow instructions on each tag.

6. Position machine in desired location. Please note minimum space requirements listed below:

	SW4013E	SW4143E	SW4243E	A4243E
SIDES	6”	6”	6”	6”
REAR	6”	6”	6”	6”

CAUTION: Failure to position the machine in an area with adequate air circulation may result in poor machine operation and possible machine damage.

NOTE: For water cooled machines, less air space is needed. Note the water connections marked "IN" and "OUT". Connect incoming water line to connection marked “IN”. Connect line going to drain to connection marked "OUT". It is best to use a flexible water line for easier cleaning and servicing.

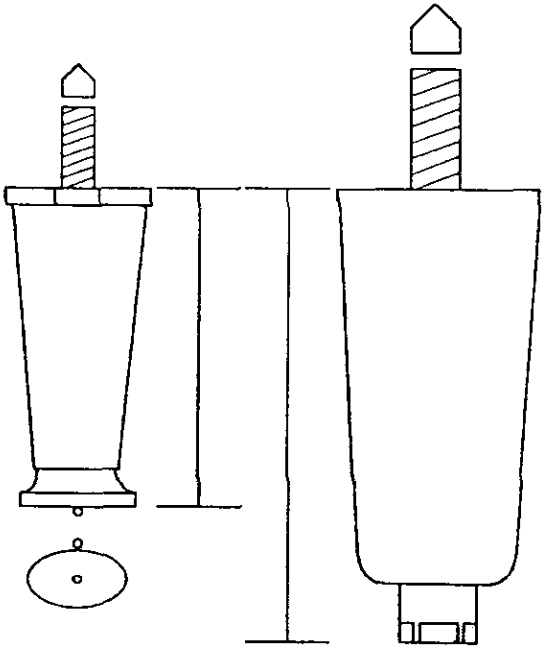

FIGURE 1
LEG ADJUSTMENT

Electrical Connections

Check data plates on back panel for proper voltages and amperages.

CAUTION: To prevent electrical shock, disconnect the power supply before proceeding.

NOTE: See the following chart for power connection sizing and circuit protection.

	SW4013E	SW4143E	SW4243E	A4243E
RECOMMENDED DISCONNECT SIZE:	15 AMP	15 AMP	15 AMP (2)	20 AMP (2)
MINIMUM CIRCUIT AMPACITY:	5	7	7	7.1
MAXIMUM FUSE SIZE:	7	10	11	15

1. Remove cover from handy box (See Figure 2).

2. Insert incoming cable through hole on the bottom of the handy box.

NOTE: Incoming cables should be 10 gauge with a 30 amp circuit breaker. As per Article 3100-16 of the National Electrical Code, 14 gauge wire will carry 15 amps.

3. Realizing that these machines were designed for shipboard use and that there is no ground wire in this application, if the machine is to be used in land based operation, a ground wire should be connected to the green ground screw located in the handy box.

CAUTION: For land based installation, electrical shock may occur if machine is not properly grounded.

4. Three wires will be coming from the unit. They are: #1 Black-Power, #2 Black-Power, #3 Black-Power.

5. Connect these three wires to the incoming power cable.

NOTE: Looking at the pulleys at the rear of unit, they should run in a clockwise direction when power is turned on. If they run counterclockwise, interchange any two power wires and check for clockwise direction. Repeat if necessary.

6. Reinstall handy box cover.

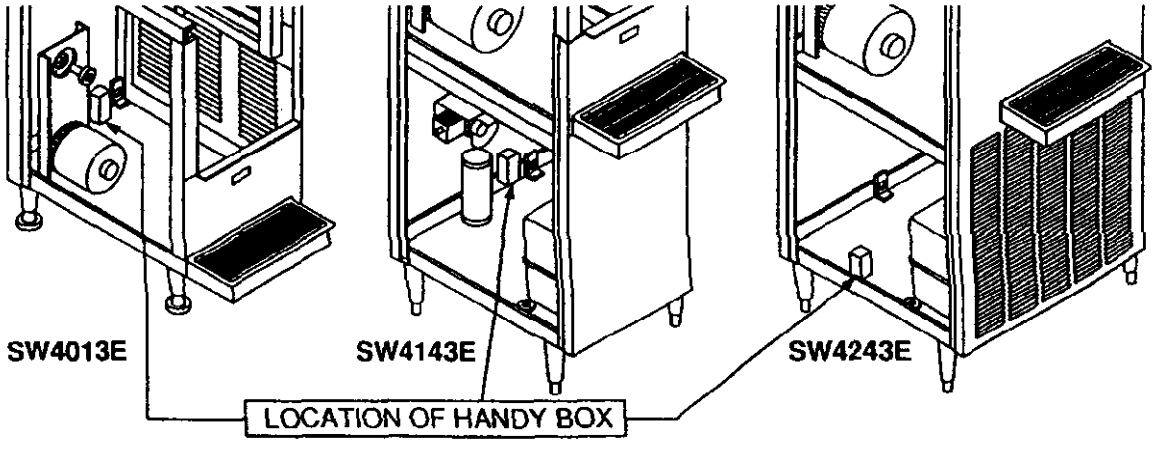

FIGURE 2
LOCATION OF HANDY BOX

Disassembly

The machine must be cleaned daily (as usually required by The Board of Health). This requires only a small amount of time and should be carried out daily without fail.

NOTE: Prior to disassembly and cleaning of parts, the machine must be emptied of product. Use the following procedure:

1. Remove the carburetor tube. (See Figure 3).

2. Set the control switch on the front panel to “CLEANOUT” postion. (See Figure 4).

3. Draw off product by opening the spigot handle to empty machine. When the machine is empty, turn the control switch to the "OFF" position.

4. Fill the machine with cold water and set the control switch to “CLEANOUT” position.

CAUTION: Do not use hot water which may damage machine.

5. Let machine agitate briefly, then drain water by opening the spigot handle. After the machine is empty, set control switch to “OFF” position.

6. Remove front plate and front plate o-ring by loosening and removing black plastic knobs. (See Figure 5)

7. Remove dasher assembly, stator rod and rear seal. Be careful not to damage the scraper blades. (See Figure 6)

8. At this point, it may be necessary to rinse off the excess frozen mix from the dasher in lukewarm water.

9. Remove scraper blades from dasher assembly (Figure 7) by first rotating the blade, and then unsnapping one end of the blade from the support rod. Disassemble the stator rod and rear seal from the dasher.

10. Disassemble the front plate by removing the faspin and removing the handle. With the handle removed, the spigot plunger can be pushed out to the top of the front plate. (See Figure 8).

11. Remove the o-ring from the spigot plunger and carburetor tube by grasping part one hand as shown and with a dry cloth in the other hand, squeeze the o-ring upward. When a loop is thus formed, grasp the o-ring with the other hand and roll the o-ring out of its groove and off the part. (See Figure 9).

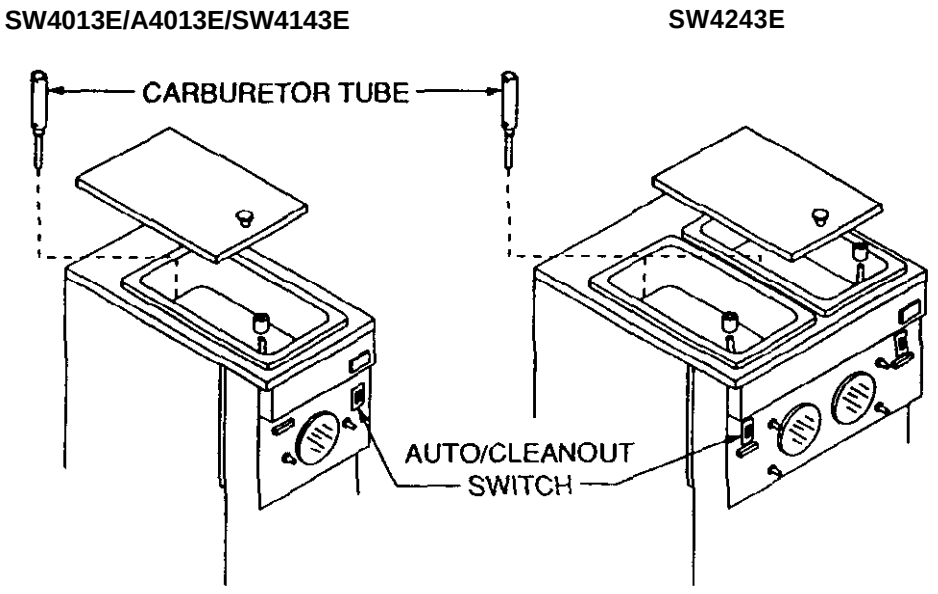

FIGURE 3
CARBURETOR TUBE & CONTROL SWITCH LOCATION

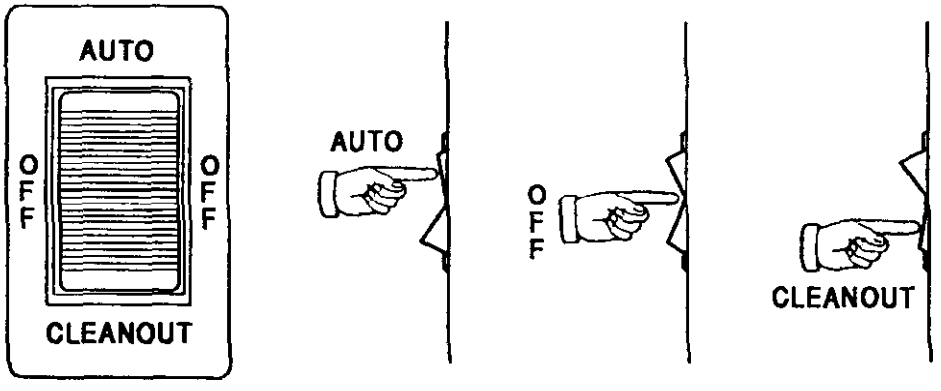

FIGURE 4
AUTO/CLEANOUT SWITCH POSITIONS

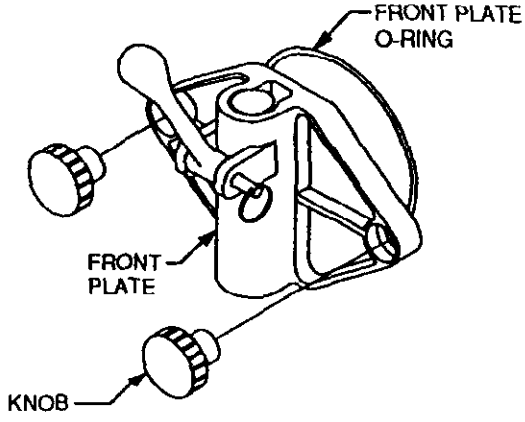

FIGURE 5
FACE PLATE KNOB REMOVAL

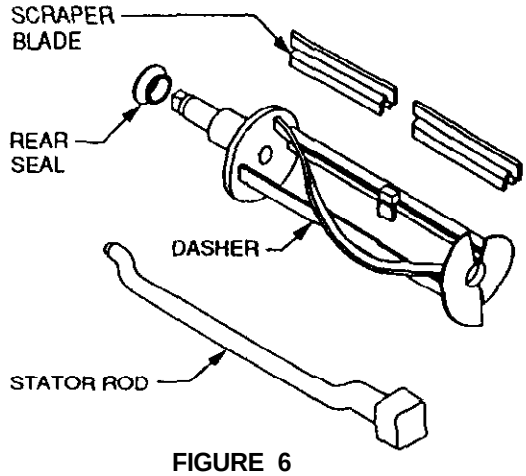

FIGURE 6
DASHER ASSEMBLY

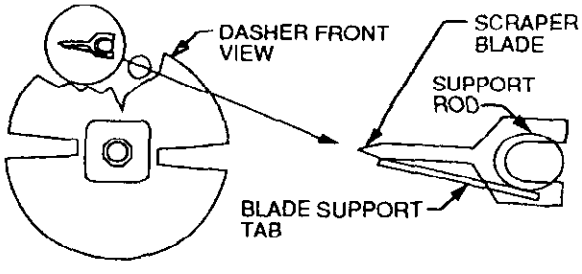

FIGURE 7-A
SCRAPER BLADE REMOVAL

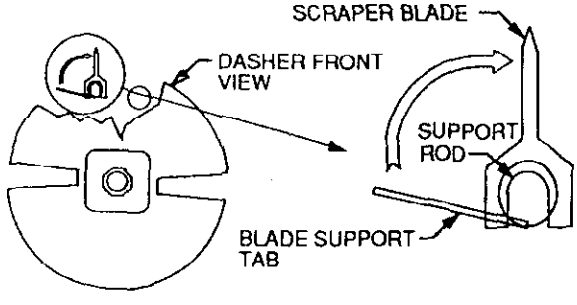

FIGURE 7-B
SCRAPER BLADE REMOVAL

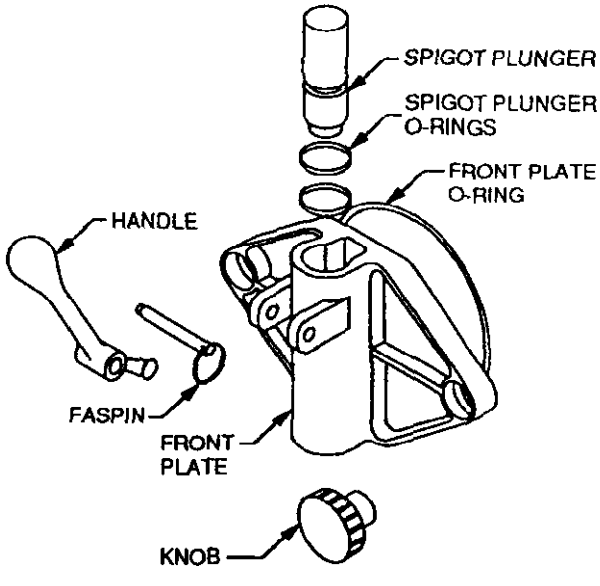

FIGURE 8
FRONT PLATE ASSEMBLY

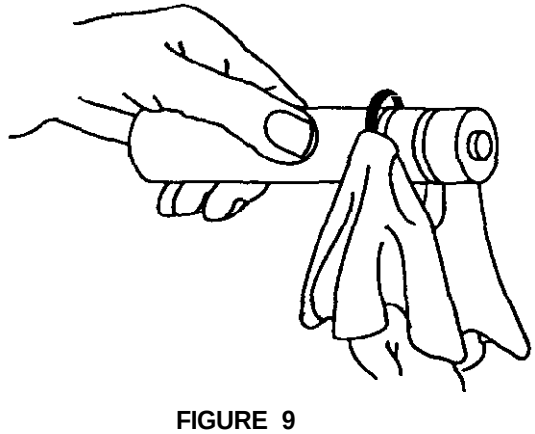

FIGURE 9
O-RING REMOVAL

Cleaning Instructions

1. After all parts have been removed, they can be placed in a sink and washer with a mixture of water and detergent. Rinse parts thoroughly and air dry to prepare for lubrication and reassembly.

NOTE: One package of Stera-Sheen detergent per two gallons of room temperature water, or one capful of liquid bleach per one gallon of room temperature water are recommended by SaniServ.

CAUTION: Care should be taken when using detergents for machine cleaning. Mixing detergents too strongly or using an improper detergent can damage the machine.

2. Wipe out the barrel with a soft cloth saturated in detergent and water solution.

3. Rinse out the mix pan with a generous amount of detergent and water solution.

4. Thorougly clean out the carburetor tube hole in the mix pan with a brush (provided) and solution. Care should be taken not to scatch any surface.

Lubricating

All parts that have been removed for cleaning must be lubricated at the points indicated before assembly. (See Figure 10.) Use only Petrogel, orange oil, or other approved lubricants. DO NOT use other than a food approved lubricant.

NOTE: To assure long machine life, this procedure must be carried out daily.

1. Reinstall the o-rings in the spigot plunger and apply lubricant to both o-rings. Then, smooth the lubricant into the grooves and over the complete plunger assembly. (See Figure 10).

2. Lubricate the dasher bearing surface at the front of the stator rod. (See Figure 11) (SEE PAGES 36 & 37 FOR DASHER PARTS).

3. Lubricate the rear of the dasher between the dasher back plate and the dasher rear seal. The rear seal is installed with the rubber part to the rear and the plastic against the back plate of the dasher.

CAUTION: Do not lubricate the orange rubber surface, as it will not seat properly and may leak product out of the rear bearing.

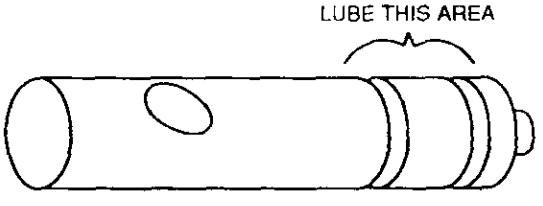

FIGURE 10
SPIGOT PLUNGER LUBRICATION

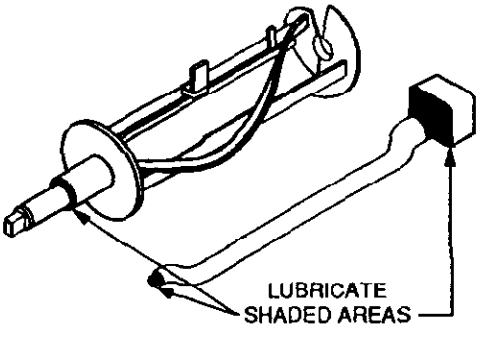

FIGURE 11
DASHER LUBRICATION

Reassembly

Use only food approved lubricants. Petrogel is recommended and is available from the factory. Lubrication must be performed daily.

1. To reassemble the front plate, simply reverse the order of disassembly as described in the disassembly procedures.

2. Place the rear seal on the rear of the dasher with the plastic piece against the dasher rear plate and the rubber piece pointing towards the back of the machine. (Figure 6) (SEE PAGES 36 & 37 FOR DASHER PARTS).

3. Mark the scraper blades so that they may be switched to cut evenly from both edges. One side of the blade could be marked with an "X" and the other side with an "O". All even days would be "X" days and the blade would face "X" up. The odd days would be "O". At that time, the "O" would be face up. This would ensure a self-sharpening action with the blades.

4. Assemble the scraper blades onto the dasher by snapping them over the support rod and rotating down. The blades are reversible and may be installed end for end without effect on the operation of the machine.

5. Slide the stator rod into the dasher.

6. Place the dasher into the freezing cylinder and rotate it slowly until the tongue on the dasher engages the groove in the drive system.

CAUTION: Do no lubricate the front plate o-ring.

7. Place the o-ring on the back of the front plate assembly and install front plate onto machine using the plastic knobs, then tighten the knobs evely, a little at a time. DO NOT overtighten.

8. Lay the carburetor tube in bottom of mix pan for sterilization.

Mix Pan Refrigeration Adjustment

If the mix pan is not at the desired temperature, the following steps should be taken:

1. Place a refrigeration service manifold on the schrader fitting upstream of the evaporator pressure regulator (EPR) valve. The pressure, while in operation, should stabilize between 53-55 PSIG (pounds per square inch gauge). If the mix pan is:

TOO WARM: LOWER EPR SETTING
TOO COLD: RAISE EPR SETTING

2. While the machine is in operation, loosen the jam nut on the EPR valve and turn the screw in or out as needed according to pressure needed.

SPECIAL NOTE:

For mixes made from powder, there may be too much refrigeration effect at the 53-55 PSIG setting. Therefore, the EPR valve may be set to a maximum of 62 PSIG.

Sanitizing

NOTE: This step should be performed after disassembly and cleaning, and just prior to using the machine.

NOTE: Cleaning and sterilizing of this machine must be done daily, or as required by the local health agency.

1. Sanitize unit by pouring an approved sanitizing solution, such as Stera-Sheen Green label, with warm water as per sanitizing agent's direction, into the mix pan. Prepare the solution equal to 100 ppm residual cholrine.

2. Using the sanitary brush provided, brush out small holes in parts.

3. Set control switch to "CLEANOUT" position and let machine agitate for about three minutes.

4. Turn the auto/cleanout switch to the "OFF" position and drain the solution from the machine.

WARNING: Do not insert any objects or tools into the mix inlet hole, or the dispensing hole in the face plate. Damage to the machine or personal injury may result.

Charging and Starting

Always start with a cleaned and sanitized dispenser as per previous instructions, and use only fresh mix when charging the units.

NOTE: Adherence to these instructions is critical to the maximum operating efficiency of the machine.

1. Add mix until the barrel is one-half full, or until the level is even with the horizontal strengthening rib of the front face plate.

2. Install the carburetor tube turn it to the “CLOSED” position.

3. Fill the mix pan with mix. DO NOT open the carburetor tube at this time. Be sure to keep mix in mix pan at all times to avoid starving the evaporator.

4. Start the machine by setting the control switch (Figure 3) to the **“AUTO”** position and raising the spigot switch arm (Figure 3) until both dasher motor and compressor are running.

5. After the dispenser shuts off, open the carburetor tube to the desired position.

NOTE: Proper use of the carburetor tube insert will increase overrun. It is normally best to run the unit with the smaller hole of the insert showing through the hole of the carburetor tube.

If, when you start to draw heavily on the unit, a scraping sound is heard in the freezing cylinder, change to the larger hole. When business subsides, change back to the smaller hole.

CAUTION: When dispensing product, make sure one of the holes is open at all times. If not, the flow of mix will be restricted and possibly freeze the product too hard, which can cause machine damage.

6. Draw a small amount of product from the spigot. If the the product is not at the desired consistency refer to the TORQUE ADJUSTMENT section of this manual.

7. Repeat Step #6 until all desired consistency is obtained.

Torque Adjustment

The torque control system is a very simple method of controlling the consistency of the finished product. The machine operates without a temperature control. Refrigeration is controlled by measuring the torque on the dasher motor and the consistency of the product. The tension of a spring against the torque idler determines how long the unit will run by activating a limit switch which turns the compressor off (See Figure 12). The longer the compressor runs, the harder or colder the product. The less it runs, the softer the product. This directly relates to product temperature.

Initial adjustments have been performed at the factory; however, to satisfy individual preferences, the following adjustments may be required:

1. Remove the right side panel (as viewed from the front of the machine).

2. Identify the torque adjustment screw. (Figure 12).

3. From the head of the screw to the retaining clip that the spring attaches, should be 1 1/4" to 1 1/2" distance. Depending upon the product mix, additional small amounts of adjustment may be necessary. Once the unit is producing the desired product temperature, no additional adjustments should be required. However, every time the operator changes the type of product mix, i.e. yogurt, soft serve, sorbet, Yodolo, etc., additional changes may be necessary as some products may need to be run warmer, some may be required to run a few degrees lower than vanilla for example.

   To make additional changes to the product temperature, you will need to turn the torque adjustment screw clockwise for cooler, and counterclockwise for warmer. Such adjustments should be in increments of two (2) full 360 degree turns. By adjusting the screw two (2) full turns, it will affect the temperature of the product 1 degree F.

CAUTION: Extreme care should be exercised to keep hands and tools away from moving parts Personal injury could result.

4. Wait until the compressor has cycled off and draw three (3) samples of 4 ounces each to check the product consistency.

5. Repeat steps 2 and 3 until the desired consistency is obtained. This process allows new mix to enter the freeze chamber from the mix pan hopper, thus the refrigeration system can now adjust to the new conditions.

6. Install the right side panel and the machine is ready for continuous operation.

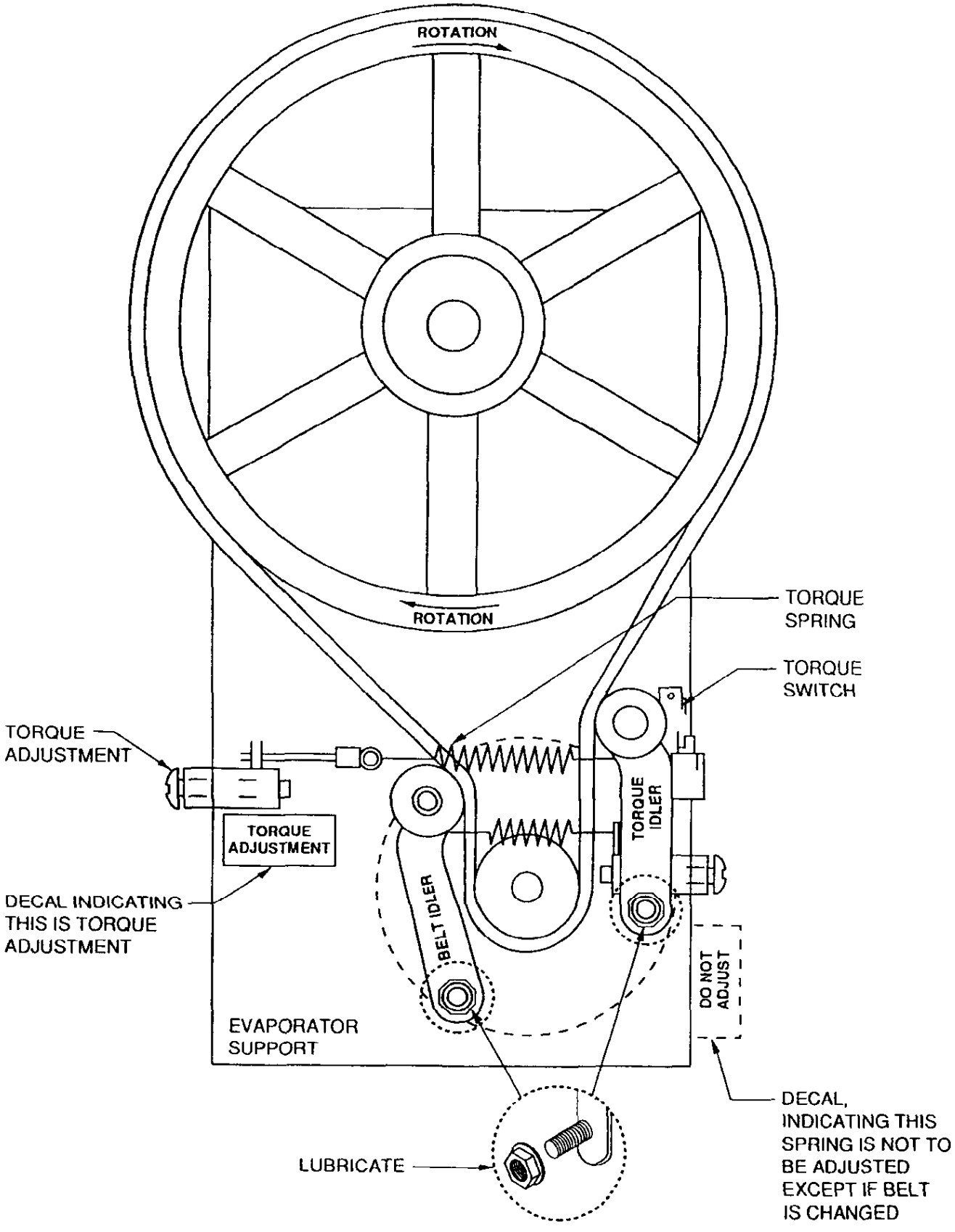

Figure 12
Torque Control System

Helpful Hints

1. Never lubricate the face plate o-ring. Once the o-ring is lubricated, it will not seat and seal properly. As the leaking product mix begins to drip from the face plate, most operators then tighten the two face plate knobs. This results in face plate breakage.

2. Always tighten front plate knobs evenly. Uneven tightening results in binding and breakage. Once the face plate is in position, gradually tighten each of the knobs evenly.

3. Never install the spigot handle into the plunger and face plate backwards (upside down). If it is installed in this manner, it provides too much leverage against the faspin and plunger resulting in face plate cracks.

4. The stator rod must be properly seated prior to attempting to install the face plate. If it is improperly installed, it will chip away at the face plate socket.

5. Faceplate breakage will also occur when the evaporator freeze chamber is too cold and the product mix becomes too hard, resulting in face plate damage and dasher failure. The evaporator must function within the design limitation set-up for your machine. Failure to observe these design criteria will cause additional damage to the machine.

6. Idler Arm Maintenance

After the first six (6) months of machine operation, and every six months thereafter, it is advisable to disconnect both idler arms from their respective springs. Once disconnected, remove the nut from the pivot point of the idler. Mark the individual idler arms so that you will know the correct way to reinstall after performing the maintenance. Now, remove the two idler arms and inspect the pivot point sleeve. This area should be free of rust, paint and product mix. If any of these substances are found, it is advisable to obtain a fine grade of emery cloth and polish the sleeve surface. Also, sand the surface of the pivot stud, making sure the stud is highly polished. After this has been accomplished, it is advisable to apply grease to the stud surface, as well as the pivot sleeve surface.

Reinstall the idler arms, being careful not to apply grease to the belt's surface. Reattach the torque spring and the belt idler arm spring. It may not be necessary to readjust the screws. Place the unit into operation and observe the product temperature.

Troubleshooting

Symptom	Probable Cause	Remedy
1. Unit will not start. Note: (a) Three phase units must be started by turning Auto/ Cleanout switch to **"Auto"** and then lifting spigot switch. Maintain switch in up position for 1 ½ seconds minimum. (b) Three phase dasher motors have externally mounted over load devices located in the electrical enclosure and fastened to the bottom of dasher contactor or directly to electrical box wall. Overload is preset to a value equal to motor's marked full load amperage. Overload is not to be adjusted beyond 125% of motor's marked full load amperage. Overload is an automatic reset device. (c) Under no circumstances should machine start when switching from **"Off"** to **"Auto". Exception: Those units with clock motor cam timers may start if timer switch arm is in the bottom of the cam.** (d) Ensure that unit connected to a dedicated circuit.	1. Blown fuse.	1. Inspect and/or replace fuse.
	2. Tripped circuit breaker.	2. Reset breaker. Use HAC & R type breakers.
	3. Low voltage.	3. Check voltage at main power terminal block in unit. Voltage should be (+) or (-) 10% of data plate rating. Check integrity of connectors.
	4. Incorrect power cord.	4. Compare wire ampacity with fuse or breaker size.
	5. Auto/Cleanout switch.	5. Check continuity thru all 3 poles of switch.
	6. Dasher overloaded.	6. Cool off via fan; restart unit and define cause of overload.
2. Dasher motor starts, but compressor does not.	1. Torque switch.	1. Check for proper action on switch then check switch contacts
	2. 1.5 second timer.	2. Temporarily jump out timer and attempt to restart. Note: 1 ½ second timer may be left out temporarily, but must be replaced.
	3. Contactor.	3. Check contactor coil and contacts.
	4. Dasher motor wiring.	4. If dasher motor is miswired, contactor will not energize (single phase only).
	5. Compressor.	5. Check start components and compressor. Refer to compressor manufacturer's handbook for details.

Symptom	Probable Cause	Remedy
3. Unit will not start via spigot but will start, run and make salable product if started by "Auto/Cleanout" switch.	1. Spigot switch.	1. Check switch for proper action; then check switch contacts. Switch should be electrically closed when spigot is at rest. Note: Units with clock motor cam timers, spigot switch is open at rest.
	2. Ten minute recycle timer.	2. Remove wire temporarily from terminal #4 or #5 of timer. Timer should activate machine via solid state relay. If not, check relay operation. If relay is bad, timer cannot operate. If relay is found to be good, timer is bad.
	3. Solid state relay	3. Remove wire at terminal #3 of relay. Move wire at terminal #2 of timer to terminal #3 of relay. Reapply power to unit. Unit should start immediately in **"Auto"** mode including dasher and compressor. If unit starts, relay is good & timer is bad. Note: 30 machines may not have solit state relay. Check your machine.
4. Lift spigot switch, dasher starts but compressor contactor chatters.	1. 1.5 second timer.	1. Put the unit in cleanout mode to see if chatter stops and if it does not stop, temporarily jump out timer and attempt restart.
	2. Improper power supply.	2. Ensure unit is connected to a dedicated circuit with correct supply cord and voltage.
	3. Recycle ten minute timer.	3. Temporarily jump wires on terminals #1 and #2 Turn to "Auto" and check for chatter. If chatter persists, see solid state relay below. If this stops chatter, change timer.
	4. Solid state relay.	4. Temporarily jump wires on terminals #1 and #2. Turn to "Auto" and check for chatter. If this stops chatter, change solid state relay.
	5. Three phase dasher overload.	5. Check relay setting. Set at dasher motor FLA or FLA x 1.25 maximum.
5. Compressor runs in "Cleanout" mode or dasher runs in "Off".	1. "Auto/Cleanout" switch.	1. Check switch contacts via ohmmeter.

Symptom	Probable Cause	Remedy
6. Dasher starts immediately if switching to "Auto".	1. Spigot switch.	1. Check switch for proper action; then check switch contacts. Switch should be electrically closed when spigot is at rest.
	2. 10 minute recycle timer (5 pins).	2. With power off, pull wire at #1 terminal and Isolate wire. Turn power back on and set the unit to "Auto". If it starts up, check relay. If it does not start up, change timer.
	3. Solid state relay.	3. With power off, pull wire at #1 terminal of solid state relay and isolate wire. Turn power back on and set unit to "Auto".
	4. "Auto/Cleanout" switch.	4. Check continuity thru switch poles.
	5. Contactor.	5. Turn off power and remove wires from contact points. Check points with an ohm meter.
7. Unit runs, but never makes finished product.	1. Refrigeration system.	1. Check compressor operation via amp meter, volt meter, and gauges.
	2. Check condenser.	2. Water-cooled requirements are approximately 1 to 1 1/2 GPM/HP. Air-cooled units, ensure fins are clean and fan(s) are running.
	3. Check suction pressure.	3. See suction pressure on data plate.
	4. Dasher.	4. Check dasher motor and belts. Check dasher rotation. Note: All SaniServ dashers run counter clockwise from front. Check dasher scraper blades. They must be straight and sharp with no cracks or chips. Blade cutting edges must point counterclockwise from front.

Symptom	Probable Cause	Remedy
8. Unit runs, but pull down time is long. More than 15-17 minutes.	1. Scraper blades.	1. Scraper blades may be too dull, improper aligned, or installed improperly. Blades should peak between 1/8 to 3/16" above front auger. Rotate blades after each cleaning for even wear.
	2. Temperature surroundings	2. Machines will perform best in an air-conditioned atmosphere. Allow at least 6" clearance around each side of unit. If the machine is in a corner, air circulation may be too poor.
	3. Suction pressure incorrect.	3. Suction pressures outside normal settings will cause poor performance. See suction pressure on data plate.
	4. Mix.	4. Mix, at or near expiration date, will not firm up like fresh mix. Use fresh mix. Some mixes do not thicken as well as others. Therefore it is necessary to cause torque system to be more sensitive at a servable temperature and consistency. Tighten "DO NOT ADJUST" screw using caution. Extensive adjustment preloads torque system causing higher motor starting torque and additional running amperage. Mix which has been frozen, thaw and refrozen will not firm up as well as fresh mix.
	5. Torque adjustment.	5. After 15 minutes of run time, draw out three small samples of product and average temperatures. If product is correct consistency and temperature, turn torque adjustment screw counterclockwise until shutoff. Draw off half of barrel volume. While in "Cleanout" "pull carburetor tube and allow fresh mix to enter barrel, restart refrigeration. Sample product temperature after shut off. Check adjustment screw. Initial setting should be between 1 1/4" to 1 1/2" from bottom of screw head to spring retaining clip. Exception: Models 501 ET, 527ET left side torque adjustment should be 3/4" to 1". Note: Fruit based products require that the belt idler adjustment marked "DO NOT ADJUST" be tightened to maximum.
	6. Torque idler frozen and cannot activate torque switch.	6. While power is off, pull idler arm and torque arm in the direction extending spring of each arm. Although spring will offer resistance, arms should move and should not be frozen in place. If cleaning and lubrication are needed, remove belt and nut holding arm in place. Remove arm and pivot and clean with a light grade of sandpaper (180 grit), lubricate with molybdenum disulfide anti-sieze compound. Reinstall arm and belt.
	7. Torque switch.	7. With power off, pull torque arm out. Listen for audible click of switch. Release torque arm and listen again for audible click. This sound is switch opening and closing. It must do both. Notice position of torque arm as switch contacts break. If torque switch body is horizontally mounted, switch point should occur in middle of allowable travel. If adjustment is needed, carefully change pitch of bend on switch arm. Ensure that torque switch is tight in its mounting. This can affect switch point. Reminder: Torqueswitch breakspower to contactor when unit reaches torque (product consistency). Switch position (initial and final) determines whether compressor will start and stop.

Symptom	Probable Cause	Remedy
9. Unit runs, makes product, dasher runs constantly, compressor cuts on and off.	1. Spigot switch.	1. Check switch for proper action; then check switch contacts. Switch should be electrically closed when spigot is at rest. Replace if bad or adjust switch arm.
	2. Timer.	2. Pull wire at terminal #1; then satisfy torque switch manually. Unit should shut down. However, if dasher continues to run, timer is not causing dasher to run. See possible cause #3 below.
	3. Relay.	3. Pull wire at terminal #1; then satisfy torque switch manually. Unit should shut down. However, if dasher continues to run, relay is not causing dasher to run.
	4. Auto/Cleanout Switch.	4. Check poles on the switch via ohmmeter. Wire #12 powers dasher during "Cleanout" mode and also transmits power through contactor. If continuity is found with switch in "Off" or "Auto" position replace switch.
	5. Contactor	5. Check contacts with an ohmmeter.
10. Unit runs, makes finished product, won't shutoff, not short cycling, eventually freezes up.	1. Torque adjustment.	1. Refer to situation #8.
	2. Torque idler frozen and cannot activate torque switch.	2. Refer to situation #8.
	3. Torque Switch.	3. Refer to situation #8.
	4. Starved barrel.	4. Ensure that barrel of unit is not starved for mix. This would not provide enough resistance to satisfy torque. Pull carb tube and watch for excessive bubbling. This indicates a starved barrel. Note: (a) Ensure carburetor tube mix inlet is not plugged with petrogel. Clean and lubricate daily. (b) Ensure carburetor tube is set such that mix inlet tube faces front of unit. (c) Never allow finished product to be placed in mix pan. This plugs mix inlet holes. (d) Never run mix below top of the carburetor tube mix inlet hole. (b) Never run refrigeration without mix in the mix pan and carburetor tube installed.
11. Unit runs and makes finished product initially. However, after a period, product goes soft, appears grainy and is cold (within proper range).	1. Product breakdown,	1. Turn unit to "Cleanout", turn carb tube to closed position. Dispense 1 to 1 1/2 quarts of product. Remove carb tube and allow mix to fill freezing cylinder until it stops bubbling. Reinsert carb tube and turn on flow to proper adjustment. Restart refrigeration and allow 10-12 minutes to cycle off. Proper product consistency should be obtained at this time.

Symptom	Probable Cause	Remedy
12. Unit runs, makes product then melts down.	1. 10 minute recycle timer.	1. Verify that unit will restart on its own (whe "Auto" mode every 10 minutes. If it does restart, check solid state relay also. If solid state relay checks good, timer is bad.
13. Belts jump pulley.	1. Operation of unit, nocarburetor tube or mix in the mix pan.	1. Operation of unit is detrimental to scraper blade life. The ratio of mix to available cooling surface is changing at an unknown rate. This occurs prior to night shut down with operators who are extremely waste conscious. With unit in "Cleanout" mode, dispense product into pints, quarts, or into a rerun bucket.
	2. Torque or belt idler pulley alignment.	2. While power to unit if off, rotate dasher pulleys a few revolutions in each direction. Belt should travel over torque idler pulley without any left to right or right to left misalignment motion. Pulleys can be aligned with an adjustable wrench. Ensure that motor and dasher pulley are in alignment. Adjust by loosening motor pulley with a 5/32 allen set. Realign as necessary.
	3. Bearing failure.	3. Observe torque and idler pulleys for restricted movement or noise. Replace as necessary. Observe shafted bearing on dasher pulley for restricted movement or noise. Replace as necessary. Note: Belt shards are not cause for alarm. This is normal.
14. Dasher bent and/ or scraper blades broken. (Note: Once dasher is bent, it must be straightened or blades will break again.)	1. Unit ran starved for mix.	1. See notes in problem #10.
	2. Unit ran with watered down mix or improperly handled mix.	2. When using powdered mix, make it on previous day. Mix components exactly as mix manufacturer recommends, refrigerated overnight, restir before using. Never attempt to stretch mix volume by adding water. Yogurt: (1) Always thaw 72 hours before using. (2) Always stir or shake well before using. (3) Never allow any frozen particles to be placed into the mix pan.
	3. Suction pressure too low.	3. See recommended suction pressures on the data plate. Correct to proper setting before reinstalling dasher.
	4. Torque setting too tight.	4. Refer to item #8 torque adjustment. If torque setting is fully tightened, it may not be possible for the machine to reach torque.
	5. Unit ran with broken down product.	5. Product must be drawn from the machine on some regular basis.

Symptom	Probable Cause	Remedy
15. Dasher strikes barrel.	1. Worn stator rod from improper lubrication.	1. Replace stator rod and review lubrication information in operators manual. An improperly lubricated stator rod will cause dasher to grind a groove into stator rod. This will allow dasher to strike evaporator wall. This condition can be heard and will polish both interfering surfaces to a bright finish.
16. Front plate broken or leaking.	1. Improper lubrication	1. Lubricate spigot o-rings only. Never lubricate large front plate o-ring. Clean o-rings with mild soap solution at high temp.
	2. Improper installation.	2. Install and seat stator rod. Be sure that stator rod is in place. Install front plate and evenly tighten front plate knobs simultaneously. Improper tightening can damage front plate. Never clean front plated in dishwashers or an electric sink sanitizer.
	3. Cracked or defective front	3. Inspect o-ring and replace as necessary.
	4. Improper cleaning.	4. Use not dishwashers or electric sink sanitizers.
17. Front plate wobbles.	1. Front plate loose.	1. Evenly tighten front plate knobs. Do not torque knobs to extent that front plate is distorted.
	2. Product too cold	2. Torque adjustments set too tight will cause unit to freeze products to a temperature and consistency that is undesirable. This puts undue forces on stator rods and front plates.
	3. Bent dasher.	3. See section on bent dashers. This problem must be resolved, not only for front plate wobble, but for performance and longevity of other moving parts.
18. Mix out light never indicates low mix.	1. Light burned out.	1. Replace as necessary.
	2. Mix out switch is out of adjustment range.	2. Ensure switch is at top of its travel, then actuate switch
	3. Mix out switch is defective.	3. Actuate switch with float and check switch with an ohmmeter.
	4. Mix out float is missing.	4. Replace.

Symptom	Probable Cause	Remedy
19. Mix out light on continuously.	1. Unit not cleaned properly and mix float stuck to mix out tube.	1. Clean float and tube.
	2. Mix out float switch is defective.	2. Check switch with an ohmmeter. A dull glow can be seen on most units. This is normal.
	3. Mix frozen in mix pan holding float down.	3. Stir away frozen mix with a sanitized spatula and discard.
20. Mix pan freeze up.	1. Incorrect EPR setting.	1. Set EPR valves at 53-55 P.S.I.G. (Maximum:62 P.S.I.G.)
21. Mix pan refrigerated mlx too warm.	1. Capillary tube is plugged.	1. Blow refrigerant charge. Unsweat cap tube and inspect cap tube ends for restriction. Follow good refrigeration practices to reassemble after repair.
	2. Incorrect EPR setting.	2. Set EPR valves at 53-55 P.S.I.G. (Maximum:62 P.S.I.G.)
22. Rear seal leaks.	1. Improper installation or lubrication.	1. Check seal for proper installation and/or lubrication. This seal is a stationary seal. A seal that is improperly lubed (lubrication on red silicone) will spin and leak. The spinning seal will leave a mirror finish on rear of evaporator barrel. If left to spin, it will erode enough of wall surface so that nothing will seal. Use only food approved lubricants. Lubrication: See operator's manual. Install seal such that the white delrin is in intimate contact with the dasher.
	2. Defective rear seal.	2. Defective rear seals may be torn, cracked, or very flimsy. Replace as necessary.
	3. Improper cleaning frequency.	3. Follow local board of health regulations. Most dictate that ice cream makers be cleaned and sanitized once each 24 hours of operation. Note: (a) Petrogel is difficult to remove from red silicone. Mild soap at high temperature may cut away the lubricant. Seals may wear out and become flimsy and sponge like. Discard and replace seals as necessary. (b) It is critical to bearing life that the cause for a leaky rear seal be found and cured quickly. Do not use Vaseline as a lubricant, use only food grade lubricants. Food grade lubricants are colorless, odorless, and tasteless. They also resist being washed away by mix. (c) The cause for a leaky rear seal just be found and corrected or shafteted bearing will also be lost due to infiltrated mix.

Symptom	Probable Cause	Remedy
23. Dasher motor runs half speed, chatters or runs backwards in "Auto" mode.	1. Motor windings grounded.	1. Change motor.

Winter Storage

If the machine is to be used infrequently during the winter months, no extra service is needed, however do not allow the temperature around the unit to approach 32 degrees F.

To protect the machine in the off season when business is non-existant or sporadic, it is important that steps for storage be performed.

1. Turn off all power to the machine.

2. Wash all parts that come in contact with the mix in a warm mild detergent solution. Rinse in clear water and dry all parts thoroughly.

3. Store the loose parts such as the front plate parts and the dasher assembly parts outside of the machine.

4. Do not lay heavy objects on the plastic or rubber parts.

5. Cover the machine and all loose parts to protect them from dust or other elements that could contaminate them while in storage. Place the machine in a dry location.

6. On water-cooled units, disconnect the water supply. Use compressed air to blow out all remaining water in the condenser. Insert a screwdriver (Figure 13) to open the water valve.

Note: Failure to purge the machine of water can result in severe damage to the cooling system.

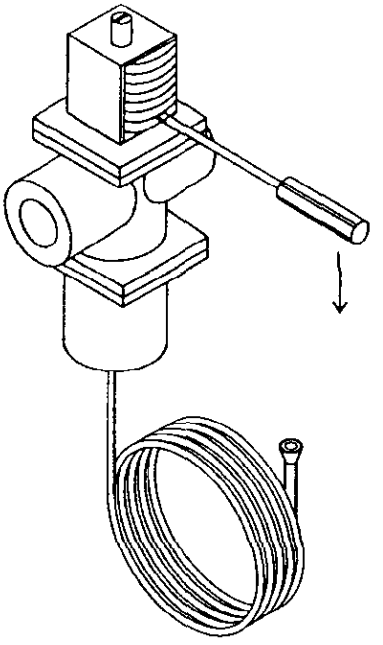

Fig. 13
Water-Cooled Condenser Valve

SW4013E EXPLODED VIEW

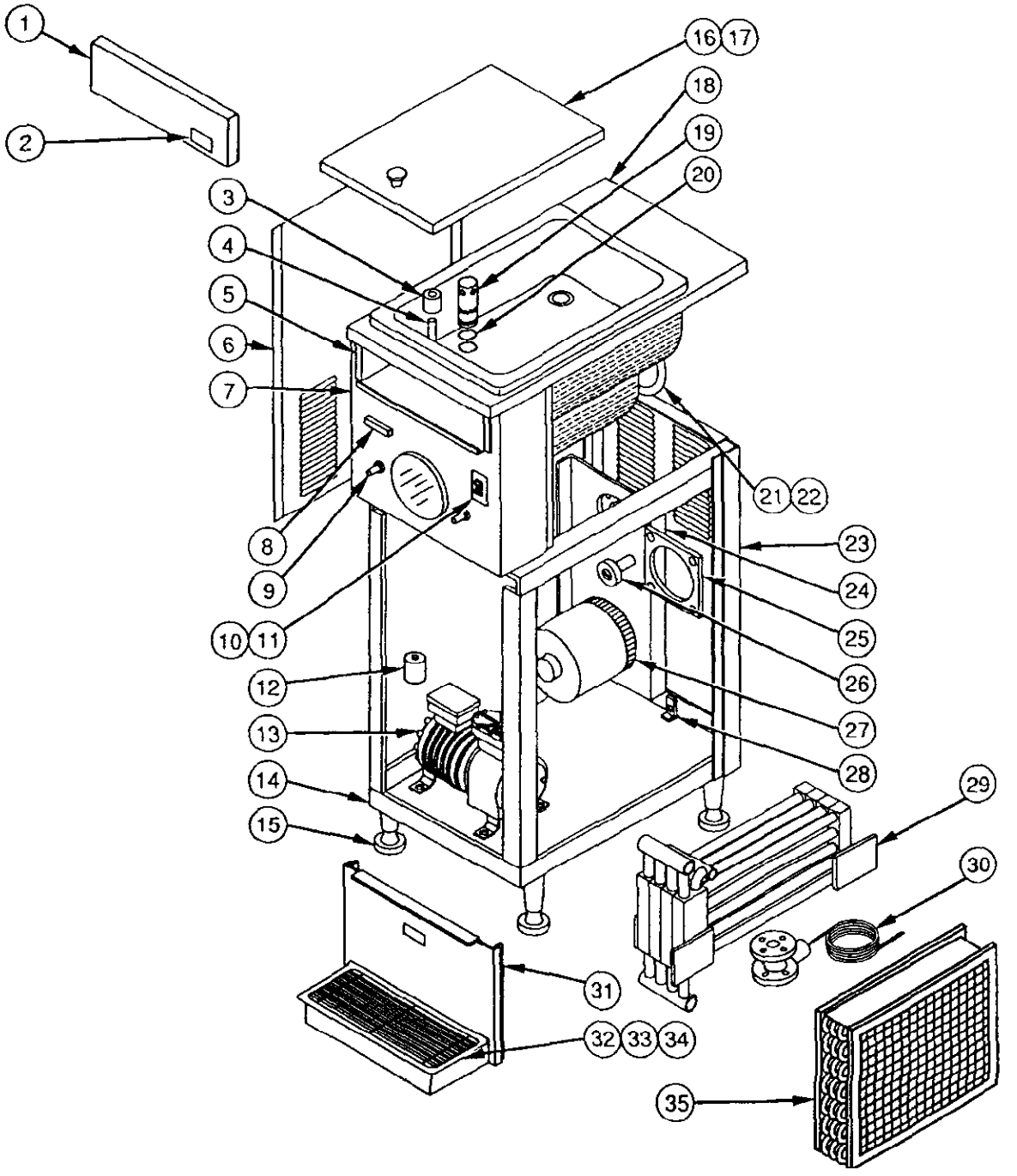

MODEL SW4013E PARTS LIST

NUMBER/DESCRIPTION	PART NUMBER
1. Wiring Box Cover	105346
2. Logo	16039
3. Mix Out Float	61396-01
4. Reed Switch	61397
5. Wiring Box Assembly	15624
Contactor (Compressor & Dasher) (2)	70125
High Pressure Switch	71090
Overload Relay	70278
Solid State Timer	70372
Spigot Switch	70008
Spigot Switch Cover	70068
Terminal Board	61073
Time Delay	70262
Transformer	70272
6. Side Panels (2)	106173
7. Upper Front Panel	105341
8. Mix Out Light	61398
9. Front Plate Studs (2)	7107
10. Auto/Cleanout Switch	70023
11. Switch Decal	9510
12. Drier	71003
13. Compressor	75567
14. Frame Assembly	105326
15. Legs (4)	64135
16. Mix Pan Lid	104278-02
17. Knob	64420
18. Mix Pan and Evaporator Top Cover Assembly	105453
19. Carburetor Tube	105692
Insert	105979
20. Carburetor Tube O-Rings (2)	58947
21. Drip Chute Hanger	105369
22. Drip Chute	105360
* 23. W/C Back Panel	106175
24. Motor & Evaporator Support	106170
25. Motor Gasket	102427
26. Bearing & Shaft	2858
27. Dasher Motor	75263
28. Condenser Mounting Bracket (2)	105990
* 29. Sea Water Condenser Assembly	75406
Y Strainer Fitting	65690
Strainer	65691
* 30. Water Valve	65687
Water Valve Mounting Flange (2)	65688
Water Valve Mounting Gasket (2)	65689
Water Valve Mounting Bracket	106224
Water Fitting Bracket	2941-01
31. Lower Front Panel	106174
32. Drip Tray Support	107523
33. Drip Tray	102054
34. Drip Tray Insert	101948
35. Not Applicable	

Note: On A4013E, disregard parts noted by * in above list and substitute the following:

23. Air-Cooled Back Panel	106172
35. Air-Cooled Condenser Assembly	105270
Air-Cooled Condenser	75128
Fan Shroud	104350
Fan Motor	75138
Fan Blade	75312
Fan Motor Bracket	7199

For additional refrigeration parts, see page number 39.

SANI SERV PART NO,	VENDOR	VENDOR PART NO.
58947 CARB TUBE O'RING	LUTZ SALES 55 N. LIVELY BLVD. ELK GROVE VILLAGE, IL 60007 800-323-0496	018-70 FDA BUNA
61073 TERMINAL BOARD	ELEC-TRON, INC. 2050 NORTHERN WICHITA, KS 67216 316-522-3401	ASS0501
61396-01 MIX OUT FLOAT	MADISON CO. 9 BUSINESS PARK DR. BRANFORD, CT 06405 203-488-4477	200-MO 3349
61397-01 MIX OUT REEDSWITCH	POWER COMPONENTS OF MIDWEST INC. P.O. BOX 1348 MISHAWAKA. IN 46544 219-256-6630	PS10-G10-1832
61398 MIX OUT LIGHT	SORENSON LIGHTED CONTROL 75 LOCUST STREET P.O. BOX 14756 HARTFORD, CT 06114 203-537-3092	RR5LRNZ-MS
64135 LEG	COMPONENT HARDWARE GRP. 730 AIRPORT RD LAKEWOOD. NJ 08701 800-526-3694	A60-0633
64420 MIX PAN KNOB	DIMCO-GRAY CO. 8200 S. SUBURBAN RD. CENTERVILLE, OH 45459 513-433-7600	533-004
65687 WATER VALVE	METRIX VALVE CORP. 505 S. VERMONT AVE. GLENDORA, CA 91740 818-335-4027	DA866P-7SNF
65688 WATER VALVE MOUNTING FLANGE	DOLSEY LTD. 863 W. 44TH ST. NORFOLK, VA 23508 804-423-3037	3/4" FLANGE 150 PSI, MIL-F 20042
65689 WATER VALVE MOUNTING GASKET	DOLSEY LTD. 863 W. 44TH ST. NORFOLK. VA 23508 804-423-3037	3/4" FLANGE 150 PSI GASKET MIL-F 20042

SANI SERV PART NO.	VENDOR	VENDOR PART NO.
65690 Y-STRAINER FITTING	DOLSEY LTD. 863 W. 44TH ST. NORFOLK, VA 23508 804-423-3037	3/4" WYE STRAINER, BRONZE S.B.
65691 STRAINER	DOLSEY LTD. 863 W. 44TH ST. NORFOLK, VA 23508 804-423-3037	200# MESH MONEL LINER
70008 SPIGOT SWITCH	MICRO-SWITCH 11 WEST SPRING ST. FREEPORT. IL 60132 815-235-6666	BA-2 RVA2
70023 AUTO CLEANOUT SWITCH	MCGILL MFG. CO. INC ELECTRICAL DIVISION 909 N. LAFAYETTE ST. VALPARAISO, IN 46383 219-465-2200	0840-0015
70068 SPIGOT SWITCH COVER	MICRO-SWITCH 11 WEST SPRING ST. FREEPORT, IL 60132 815-235-6666	5PA2
70125 CONTACTOR (COMPRESSOR & DASHER)	TELEMECANIQUE INC. 2002 BETHEL ROAD WESTMINSTER, MD 21157 301-876-2214	LC1-D1210-U6
70262 TIME DELAY	SSAC INC. P.O. BOX 1000 BALDWINVILLE, NY 13027 315-638-1300	TSX11611.5SPC200
70272 TIME DELAY	GENERAL ELECTRIC SUPPLY 1250 STADIUM DR. INDIANAPOLIS, IN 46202 317-633-5226	9T51B507
70278 OVERLOAD RELAY (COMPRESSOR & DASHER)	TELEMECANIQUE INC. 2002 BETHEL ROAD WESTMINSTER, MD 21157 301-876-2214	LR4-D09307
70372 SOLID STATE TIMER	SSAC INC. P.O. BOX 1000 BALDWINVILLE. NY 13027 315-638-1300	TS23OA-1267

SANI SERV PART NO.	VENDOR	VENDOR PART NO.
71003 DRIER	ALCO CONTROLS DIVISION P.O. BOX 102057 ATLANTA, GA 30368-0057 314-569-4500	047625
71090 HIGH PRESSURE SWITCH	RANCO NORTH AMERICA DEPARTMENT 644 P-O. BOX B COLUMBUS, OH 43265 614-873-9000	071-576089-V01
75128 AIR-COOLED CONDENSER	HEATCRAFT INC. 1822 ALAMO AVE. KALAMAZOO, MI 49007 616-343-3029	M-7630 C
75138 FAN MOTOR	FASCO MOTOR DIVISION 408 S. 9TH ST. NOBLESVILLE, IN 46060 317-776-0055	7163-2157
75263 DASHER MOTOR	FRANKLIN ELECTRIC 15235 HERRIMAN BLVD. NOBLESVILLE. IN 46060 317-773-7151	1301351102
75312 FAN BLADE	BROOKSIDE CORPORATION P.O. BOX 38 MC CORDSVILLE, IN 46055 317-335-2101	202345
75406 SEA WATER CONDENSER	STANDARD REFRIGERATION 2050 N. RUBY ST. MELROSE PARK, IL 60160 312-345-5400	MADE TO OUR SPECS DWG.CA400197 REV.A
75567 COMPRESSOR	COPELAND CORP. MARKETING COMMUNICATIONS 1675 W CAMPBELL RD SIDNEY, OH 45365-0669 513-498-3405	KAJ1-0100-TAD-200
101948 DRIP TRAY INSERT	DORCO MFG. 810 N. 6TH AVE. STRUGEON BAY, WI 54235 414-743-7201	MADE TO OUR SPECS
102054 DRIP TRAY	HOOSIER FIBERGLASS 2011 S. 3RD ST. P.O. BOX 354 TERRE HAUTE, IN 47808 812-232-5027	MADE TO OUR SPECS
102427 MOTOR GASKET	DUNHAM RUBBER & BELTING P.O. BOX 47249 INDIANAPOLIS, IN 46227-0249 317-788-9761	MADE TO OUR SPECS

SW4143E EXPLODED VIEW

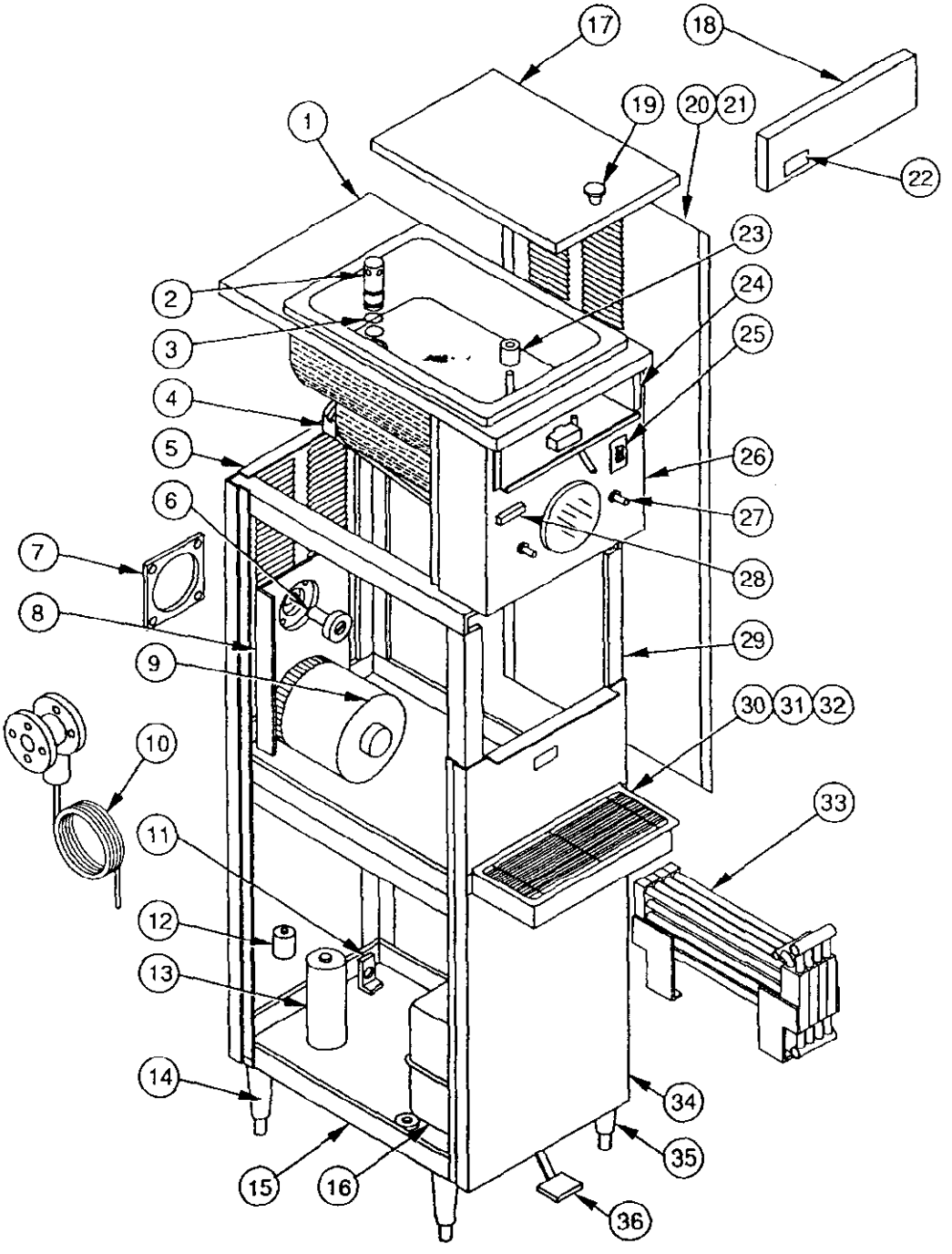

MODEL SW4143E PARTS LIST

NUMBER/DESCRIPTION	PART NUMBER
1. Mix Pan and Evaporator Top Cover Assembly	105453-02
2. Carburetor Tube	105692
Insert	105979
3. O-Rings (2)	58947
4. Drip Chute	105360
Hanger	105369
5. Water-Cooled Back Panel	106179
6. Bearing & Shaft	2858
7. Motor Gasket	102427
8. Motor & Evaporator Support	106170
9. Dasher Motor	75263
10. Water Valve	65687
Water Valve Mounting Flange (2)	65688
Water Valve Gasket (2)	65689
Water Valve Mounting Bracket	105983
11. Condenser Mounting Bracket	2941-01
12. Drier	71010
13. Receiver	75115
14. Legs (4)	64145
15. Lower Frame Assembly	105424
16. Compressor	75578
17. Mix Pan Lid	104278-01
18. Wiring Box Cover	105854-02
19. Mix Pan Lid Knob	64420
20. Side Panel	106177
21. Side Panel	106177
22. Logo	16039
23. Mix Out Float	61396-01
Reed Switch	61397-01
24. Wiring Box Assembly	15624-22
Contactor (Compressor & Dasher) (2)	70125
High Pressure Switch	71090
Overload Relay	70278
Solid State Timer	70372
Spigot Switch	70008
Spigot Switch Cover	70068
Terminal Board	61073
Time Delay	70262
Transformer	70272
25. Auto/Cleanout Switch	70023
Auto/Cleanout Switch Decal	9510
26. Upper Front Panel	105341
27. Front Plate Studs (2)	7107
28. Mix Out Light	61398
29. Upper Frame Assy.	105326
30. Drip Tray Support	107523
31. Drip Tray	102054
32. Drip Tray Insert	101948
33. Sea Water Condenser	75406
Right Condenser Mounting Bracket	105984
Left Condenser Mounting Bracket	105985
Y-Strainer Fitting	65690
Strainer	65691
Elbow	65692
34. Lower Front Panel	106178
35. Legs (4)	64145
36. Foot Pedal	105678
Foot Pedal Pivot Bracket	105681
Foot Pedal Cable	65669
Foot Pedal Cable Retainer	105795

For additional refrigeration parts, see page number 40.

SANI SERV PART NO,	VENDOR	VENDOR PART NO.
64145 LEG	COMPONENT HARDWARE 730 AIRPORT RD. LAKEWOOD, NJ 08701 800-526-3694	A61-1003
65669 FOOT PEDAL CABLE	MID AMERICA-POWER DRIVES MFG. & DIST. INC. 9620 JOLIET RD. COUNTRYSIDE, IL 60525 800-433-5765	011-042657-0-62
65692 ELBOW	DOLSEY LTD. 863 W. 44TH ST. NORFOLK, VA 23508 804-423-3037	90° ELL 3/4" IPS
71010 DRIER	ALCO CONTROLS DIVISION P.O. BOX 102057 ATLANTA, GA 30368-0057 314-569-4500	EK083S
75115 RECEIVER	A C & R 701 S. MAIN ST. CHATHAM, IL 62629 800-327-2272	S8063A W/ 3/8" X 45° FLARE
75578 COMPRESSOR	TECUMSEH PRODUCTS CO. CENTRAL REGION SALES OFFICE TECUMSEH, MI 49286 517-423-8632	AH555IT-196-A4

SW4243E EXPLODED VIEW

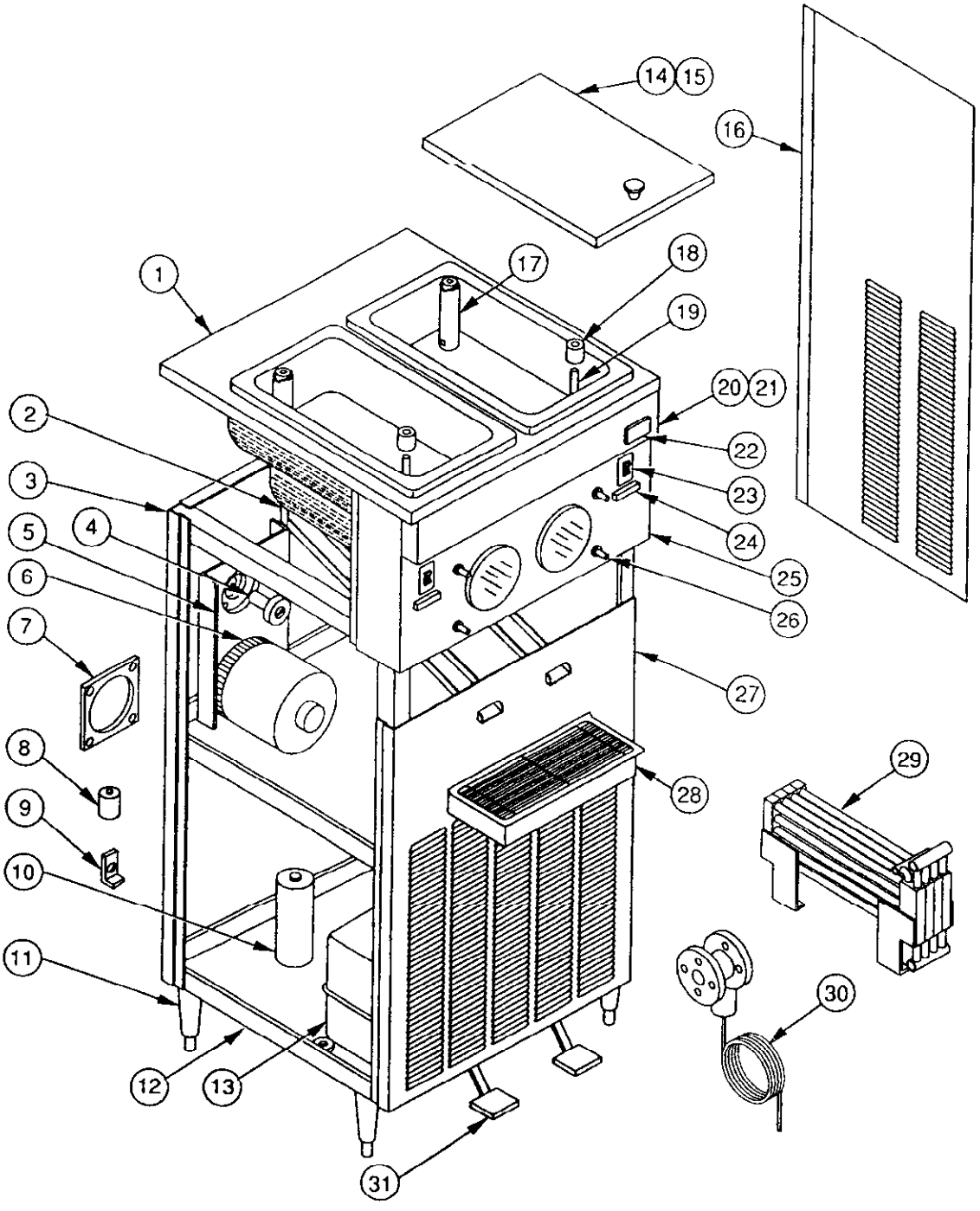

MODEL SW4243E PARTS LIST

NUMBER/DESCRIPTION	PART NUMBER
1. Mix Pan and Evaporator Top Cover Assembly	105632
2. Drip Chute Hanger (2)	105369
Drip Chute (2)	105360
3. Back Panel	105652
4. Bearing & Shaft (2)	2858
5. Evaporator Support(2)	105761
6. Dasher Motor (2)	75579
7. Gasket (2)	102427
8. Drier (2)	71010
9. Water Fitting Bracket (2)	2941-01
10. Receiver (2)	75115
11. Legs (4)	64145
12. Frame	105624
13. Compressor (2)	75578
14. Mix Pan Lid (2)	104278-02
15. Knobs (2)	64420
16. Side Panel (2)	105653
17. Carburetor Tube (2)	105692
Insert (2)	105979
O-Rings (4)	58947
18. Mix Out Float (2)	61396-01
19. Reed Switch (2)	61397-01
20. Wiring Box Assembly	15630
Contactor (Compressor & Dasher) (2)	70125
High Pressure Switch	71090
Overload Relay	70278
Solid State Timer	70372
Spigot Switch	70008
Spigot Switch Cover	70068
Terminal Board	61073
Time Delay	70262
Transformer	70277
21. Wiring Box Cover	105564-02
22. Logo	16039
23. Auto/CleanoutSwitch (2)	70023
Switch Decal (2)	9510
24. Mix Out Light (2)	61398
25. Upper Front Panel	105649
26. Front Plate Studs (4)	7107
27. Lower Front Panel	105769
28. Drip Tray	102054
Drip Tray Insert	101948
Drip Tray Support	107523
29. Sea Water Condenser (2)	75406
Right Mounting Bracket	105984
Long Right Mounting Bracket	105984-01
Long Left Mounting Bracket	105985-01
Left Mounting Bracket	105985
Y-Strainer Fitting (2)	65690
Strainer (2)	65691
Elbow (2)	65692
30. Water Valve (2)	65687
Water Valve Mounting Flange (4)	65688
Water Valve Gasket (4)	65689
Water Valve Mounting Bracket	105983
31. Foot Pedal (2)	105678
Foot Pedal Pivot Bracket (2)	105681
Foot Pedal Cable (2)	65669
Foot Pedal Cable Retainer (2)	105795

For additional refrigeration parts, see page number 40.

SANI SERV PART NO.	VENDOR	VENDOR PART NO.
70277 TRANSFORMER	GENERAL ELECTRIC SUPPLY 1250 STADIUM DR. INDIANAPOLIS, IN 46202 317-633-5226	9T51B2
75579 DASHER MOTOR	FRANKLIN ELECTRIC 15235 HERRIMAN BLVD. NOBLESVILLE, IN 46060 317-773-7151	1302330102

TORQUE ASSEMBLY

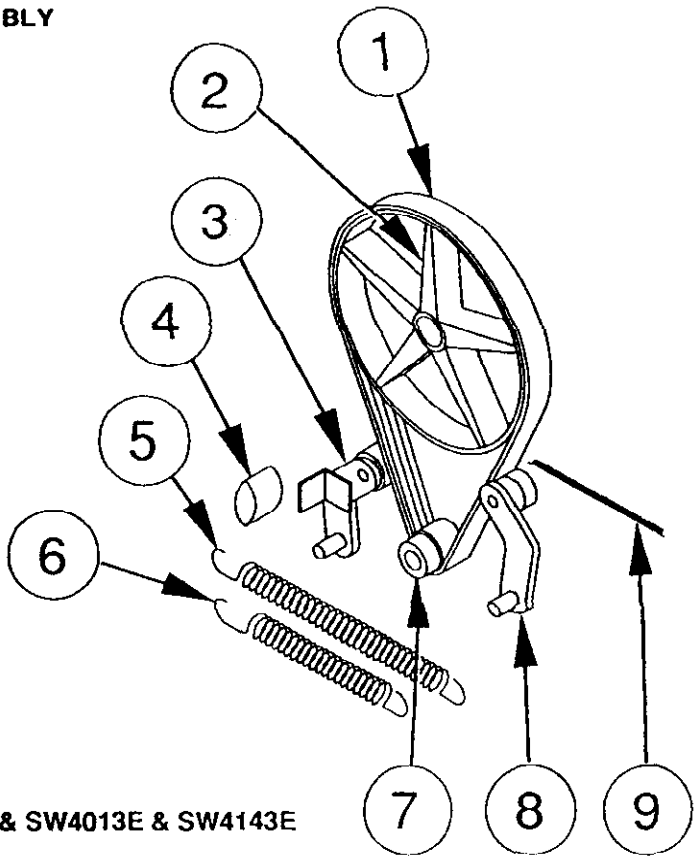

MODEL A4013E & SW4013E & SW4143E

NUMBER/DESCRIPTION	PART NUMBER
1. Belt	58880
2. Driven Pulley	10207
3. Torque Idler Arm	103248
4. Torque Arm Cushion	104648
5. Torque Spring	64504
6. Idler Spring	64515
7. Drive Pulley	10208
8. Belt Idler Arm	103249
9. Torque Cable	103745

MODEL SW4243E

NUMBER/DESCRIPTION	PART NUMBER
1. Belt (2)	58891
2. Driven Pulley (2)	10615
3. Torque Idler Arm (2)	104973
4. Torque Arm Cushion (2)	104648
5. Torque Spring (2)	64504
6. Idler Spring (2)	64515
7. Drive Pulley (2)	10208
8. Belt Idler Arm (2)	103249
9. Torque Cable	
Right Hand Torque Cable	105730
Left Hand Torque Cable	106102

SANI SERV PART NO.	VENDOR	VENDOR PART NO.
58880 BELT	DAYCO PRODUCTS INC. 1 PRESTIGE PLACE P.O. BOX 1004 DAYTON, OH 45401-1004 800-283-2926	520J10GT
58891 BELT	GOODYEAR 2601 FORTUNE CIRCLE E SUITE 202B INDIANAPOLIS, IN 46241 317-244-6444	400J10GT
64504 TORQUE SPRING	YOST SUPERIOR P.O. BOX 1487 SPRINGFIELD, OH 45501 513-323-7591	MADE TO OUR SPECS
64515 IDLER SPRING	YOST SUPERIOR P.O. BOX 1487 SPRINGFIELD. OH 45501 513-323-7591	MADE TO OUR SPECS
10207 DRIVEN PULLEY	JK PULLEY CO. INC. 3805 BATES ST. ST. LOUIS, MO 63116 314-481-2900	13.0 J10 X 1” BORE
10208 DRIVE PULLEY	JK PULLEY CO. INC. 3805 BATES ST. ST. LOUIS, MO 63116 314-481-2900	1.250 J10 X 5/8” BORE

DASHER & FRONT PLATE ASSEMBLY

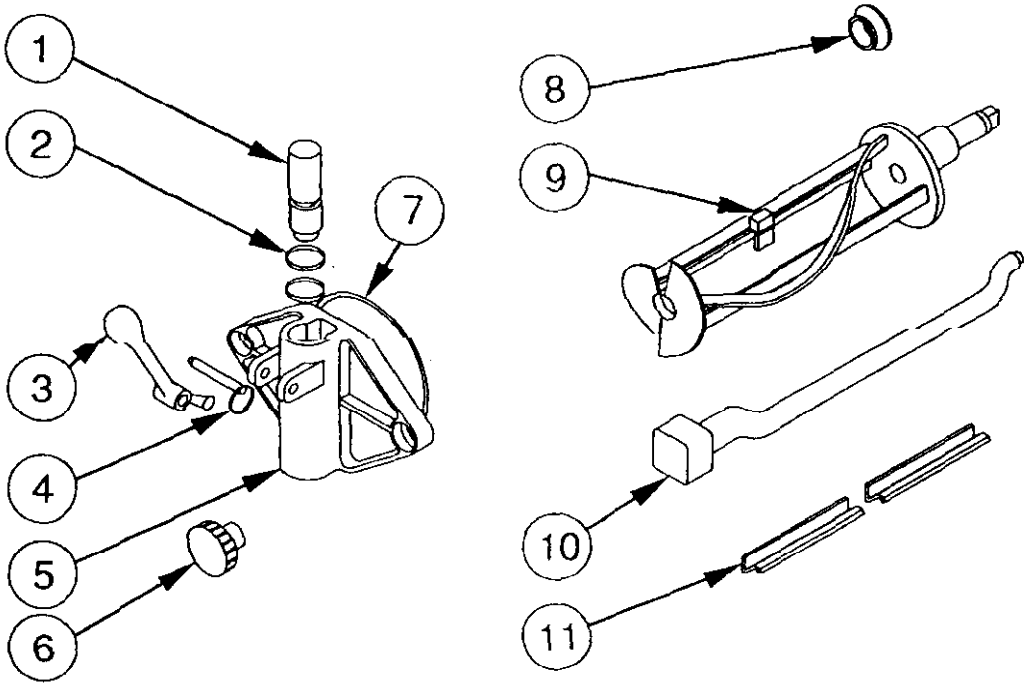

MODEL SW4013E & A4013E

NUMBER/DESCRIPTION	PART NUMBER
1. Spigot Plunger	105503
2. Spigot Plunger O-Ring (2)	58923
3. Spigot Handle	65632-02
4. Faspin	64255
5. Front Plate	65631
6. Front Plate Knob (2)	64065
7. Front Plate O-Ring	58911
8. Rear Seal	104916
9. Dasher	3113-01
10. Stator Rod	65633
11. Scraper Blade (2)	104984

MODEL SW4143E

NUMBER/DESCRIPTION	PART NUMBER
1. Spigot Plunger	105682
2. Spigot Plunger O-Ring (2)	58923
3. Spigot Handle	65632-02
4. Faspin	64255
5. Front Plate	65631
6. Front Plate Knob (2)	64065
7. Front Plate O-Ring	58911
8. Rear Seal	104916
9. Dasher	3113-01
10. Stator Rod	65633
11. Scraper Blade (2)	104984

MODEL SW4243E

NUMBER/DESCRIPTION	PART NUMBER
1. Spigot Plunger (2)	105682
2. Spigot Plunger O-Ring (4)	58923
3. Spigot Handle (2)	65632-02
4. Faspin (2)	64255
5. Front Plate (2)	65631
6. Front Plate Knob (4)	64065
7. Front Plate O-Ring (2)	58911
8. Rear Seal (2)	104916
9. Dasher (2)	3113-01
10. Stator Rod (2)	65633
11. Scraper Blade (2)	104984

SANI SERV PART NO.	VENDOR	VENDOR PART NO.
1150 PETRO GEL	MC CLAUGHLIN OIL CO. P.O. BOX 27038 3750 E. LIVINGSTON AVE. COLUMBUS, OH 43227 614-231-2518	PETRO GEL
3113-01 DASHER	CTS METAL PRODUCTS HIGHWAY 16 WEST MONON, IN 47959 317-539-6563	MADE TO OUR SPECS
58911 FRONT PLATE O'RING	LUTZ SALES 55 N. LIVELY BLVD. ELK GROVE VILLAGE, IL 60007 800-323-0496	248-70 FDA BUNA
58923 SPIGOT PLUNGER O'RING	LUTZ SALES 55 N. LIVELY BLVD. ELK GROVE VILLAGE. IL 60007 800-323-0496	212-70 FDA BUNA
64065 FRONT PLATE KNOB	DIMCO-GRAY COMPANY 8200 SOUTH SUBURBAN RD. CENTERVILLE, OH 45459 513-433-7600	1-218-002-ODC
64255 FASPIN	AEROFAST 360 GUNDERSON CAROL STREAM, IL 60188 312-668-6575	C-4-14-R-303
65631 FRONT PLATE	NATIONAL PLASTICS 5727 INDUSTRIAL BLVD. FT. WAYNE, IN 46825 219-484-0595	MADE TO OUR SPECS
65632-02 SPIGOT HANDLE	ALPHA ENGINEERING 1238 N. MORGANTOWN ROAD GREENWOOD, IN 46142 317-888-8827	MADE TO OUR SPECS
65633 STATOR ROD	NATIONAL PLASTICS 5727 INDUSTRIAL BLVD. FT. WAYNE, IN 46825 219-484-0595	MADE TO OUR SPECS
104916 REAR SEAL	MEULLER TRADING 925 SIDEWINDER CT. GREENWOOD, IN 46142 317-888-7758	MADE TO OUR SPECS
104984 SCRAPER BLADE	ETM PLASTICS CO P.O. BOX D CLAYTON, IN 46148 317-539-6563	MADE TO OUR SPECS

VENDOR/MANUFACTURER CROSS REFERENCE PARTS LIST

PLISN	MFR PRT NO	DESCRIPTION
0001	58911	O-RING 5” OD X 4 3/4” ID X 1/8 CS VENDOR: LUTZ SALES, CHICAGO, IL VENDOR PART NO: 248 70 FDA BUNA
0002	58880	BELT 520J10 POLY VEE GROUND TOP VENDOR: LUTZ SALES, CHICAGO, IL VENDOR PART NO: 520J10GT
0003	58947	O-RING 7/8" OD X 3/4” ID X 1/16 CS VENDOR: LUTZ SALES, CHICAGO, IL VENDOR PART NO: 018-70 FDA BUNA
0004	58923	O’RING 1/18” OD X 7/8” ID X 1/8 CS VENDOR: LUTZ SALES, CHICAGO, IL VENDOR PART NO: 212-70 FDA BUNA
0005	64065	KNOB - BLACK PLASTIC - KNURLED WITH 5/16”-18 X 7/16 BRASS INSERT VENDOR: DIMCO GRAY, CENTERVILLE, OH VENDOR PART NO: 1-218-002-ODC
0006	70008	SPIGOT SWITCH VENDOR: MICRO SWITCH VENDOR PAHT NO: BA-2 RVA2
0007	70023	ROCKER SWITCH WITH BEZEL VENDOR: MCGILL ELECTRIC VENDOR PART NO: 0840-0015
0008	70125	CONTACTOR (COMPRESSOR & DASHER) VENDOR: TELEMECANIQUE VENDOR PART NO: LC1 -D1210-U6
0009	70372	SOLID STATE RECYCLE TIMER 10MM/15SEC VENDOR: SSAC, SYRACUSE, NY VENDOR PART NO: TS230-1268
0010	75579	1 HP MOTOR 1200 RPM 230V/460V/60/3 VENDOR: FRANKLIN ELECTRIC VENDOR PART NO: 1302330102
0011	75578	2 HP COMPRESSOR VENDOR: TECUMSEH PRODUCTS VENDOR PART NO: AH555TT-196-A4

VENDOR/MANUFACTURER CROSS REFERENCE PARTS LIST

PLISN	MFR PRT NO.	DESCRIPTION
0012	70262	230 VOLT TIME DELAY RELAY VENDOR: SSAC VENDOR PART NO: TSC161 1.55 PC200
0013	104916	REAR SEAL VENDOR: MUELLER TRADING, GREENWOOD, IN VENDOR PART NO: CUSTOM MADE FOR SANISERV
0014	104984	SCRAPER BLADE VENDOR: ETM PLASTIC VENDOR PART NO: CUSTOM MADE FOR SANISERV
0015	1150	PETRO GEL 4 OZ. VENDOR: MCGLAUGLIN OIL VENDOR PART NO: NONE

Warranty Information

Remove the envelope and fill it out all papers enclosed. Warranty duration is eighteen (18) months on parts and five (5) years on the compressor.

Parts Order Procedure

Always order parts from your SaniServ dealer. If for some reason you cannot contact your dealer, you may order directly from the factory. Be sure to use the following order procedure:

1. Order on your purchase order letterhead.
2. Specify shipping instructions. If any order is received without specific shipping instructions, the order will be shipped best way.
3. Indicate the quantity desired, the part number, and the part description.
4. Always indicate the model number and the serial number of the machine for which the part is being ordered. In the back of this manual is an exploded view drawing and parts list of your SaniServ machine. This will aid you in ordering pads.
5. Regular mailed orders normally take three (3) days to process and ship.
6. All prices are subject to change without notice.
7. Parts Terms: All parts will be sent c.o.d. unless previous billing arrangements have been made. Customer is responsible for all freight and c.o.d. charges.
8. All shipments are made f.o.b. Indianapolis. By acceptance of a package, the carrier assumes liability for its deliveries to the customer in good condition. If a package is lost or damaged, immediately file a claim with the carrier, not SaniServ.

Parts Return Procedure

1. No warranty parts shall be returned to SaniServ without written authorization from the factory parts department.
2. When any part is returned to SaniServ for any reason, such part must be properly identified.
3. Parts returned without proper identification will be kept for a reasonable period of time and disposed of as seen fit. In such cases, no credit will be issued.
4. Nondefective parts will be returned to the customer at the customer's expense.
5. If a letter is written pertaining to any refund part, this letter should be attached to the package containing the part.
6. All correspondence pertaining to parts must be directed to the SaniServ Parts Department at:

SaniServ
2020 Production Drive
Indianapolis, Indiana 46241

7. All parts are sold f.o.b. factory.
8. Parts returned "collect" will be refused by our shipping department.

SW4013E & A4013E REFRIGERATION SCHEMATIC & PARTS LIST

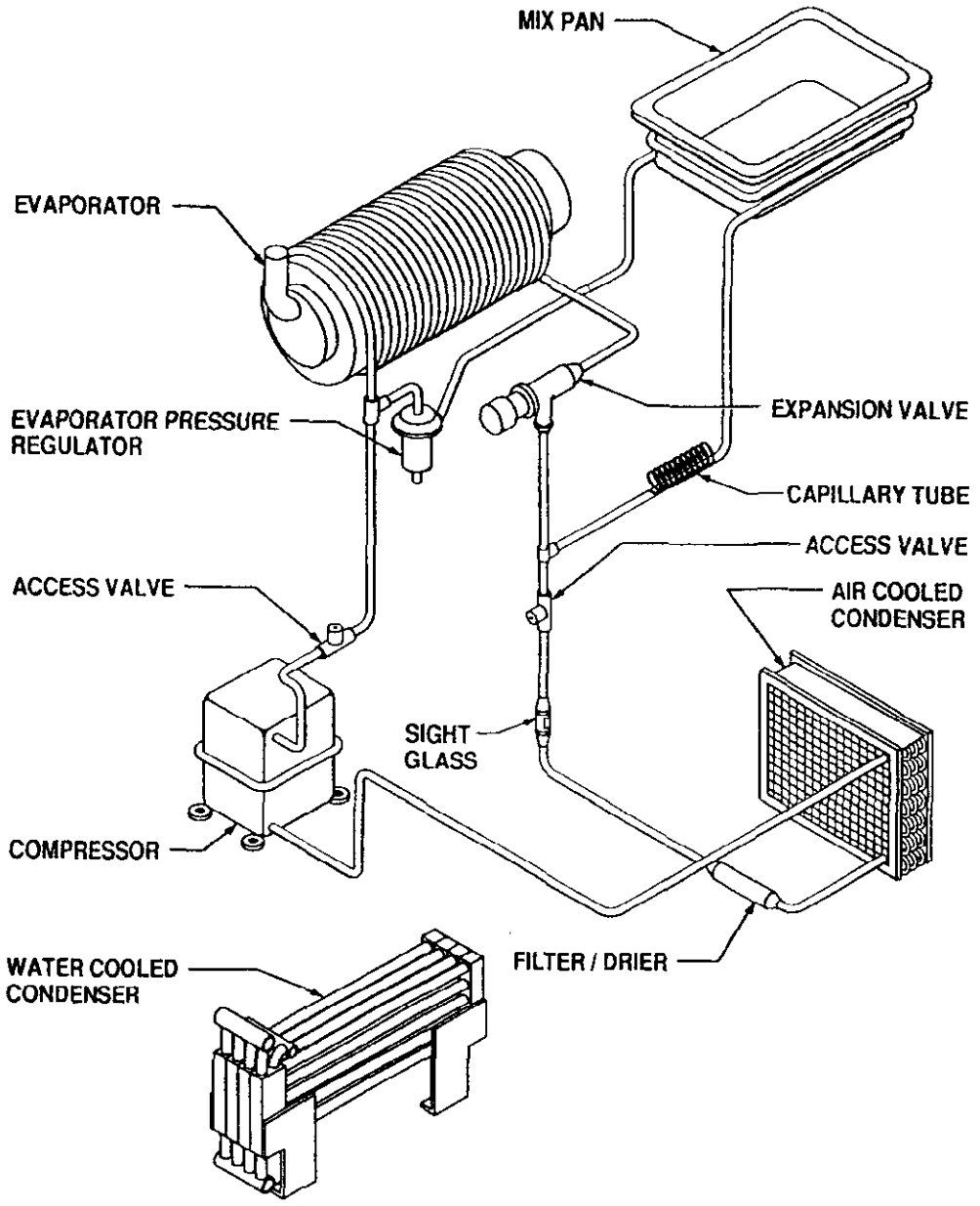

MODEL SW4013E & A4013E

NUMBER/DESCRIPTION	PART NUMBER
1. Access Valve (2)	71046
2. Capillary Tube	3084
3. Evaporator Pressure Regulator Valve	71082
4. Expansion Valve	71035
5. Filter Drier	71003
6. Sight Glass	71007

SANI SERV PART NO.	VENDOR	VENDOR PART NO.
71007 SIGHT GLASS	SUPERIOR VALVE CO. 1743 LARKIN WILLIAMS RD. FENTON, MO 63026 314-349-2211	60-4S
71035 EXPANSION VALVE	SPORLAN VALVE 7525 SUSSEX AVE. ST. LOUIS, MO 63143 314-647-2775	ADRI-1 0/55 1/4" MF INLET X 3/8" MF OUTLET
71046 ACCESS VALVE	J B INDUSTRIES P.O. BOX 1144 AURORA, IL 60507 800-323-0811	A-31134-320
71082 EVAPORATOR PRESSURE REGULATOR	EATON CORPORATION CONTROLS DIVISION 191 E. NORTH AVE. CAROL STREAM, IL 60188-2090 312-260-3400	#139-002

SW4143E & SW4243E REFRIGERATION SCHEMATIC & PARTS LIST

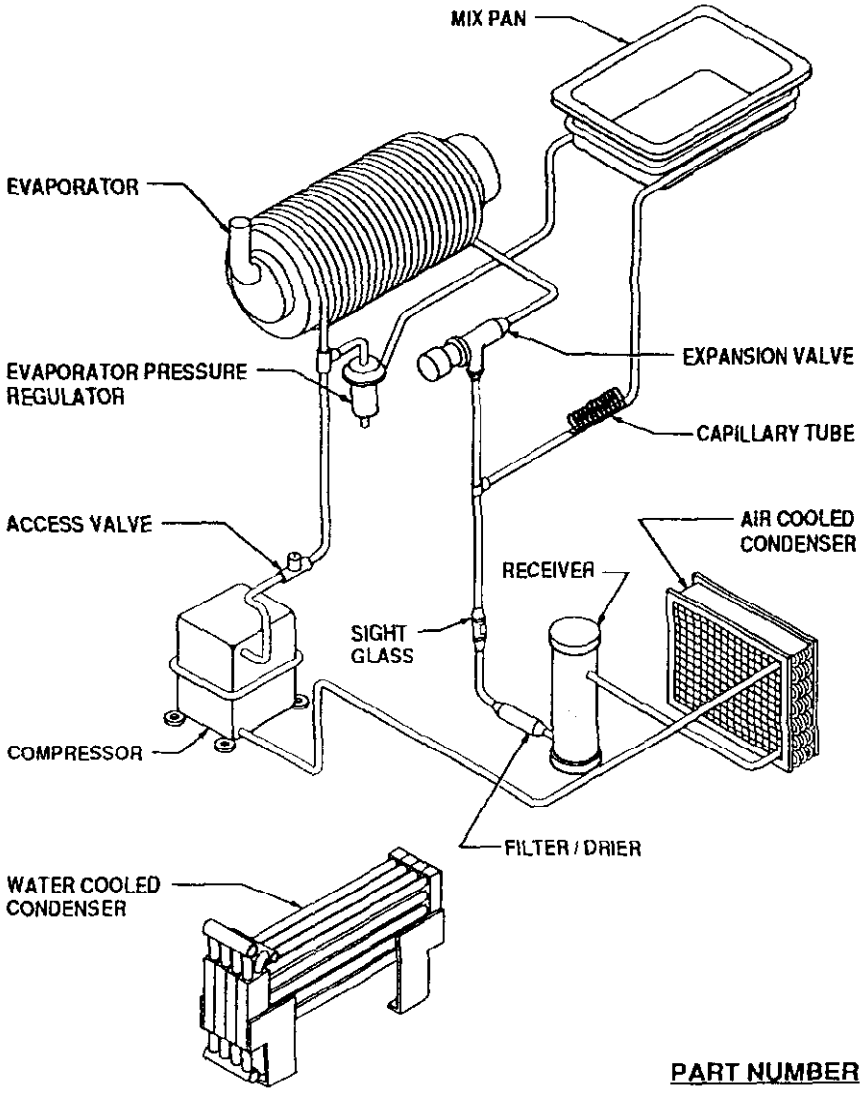

MODEL SW4143E

NUMBER/DESCRIPTION	PART NUMBER
1. Access Valve	71046
2. Capillary Tube	3084
3. Evaporator Pressure Regulator Valve	71082
4. Expansion Valve	71042
5. Filter Drier	71010
6. Receiver	75115
7. Sight Glass	71011

MODEL SW4243E

NUMBER/DESCRIPTION	PART NUMBER
1. Access Valve (2)	71046
2. Capillary Tube (2)	3084
3. Evaporator Pressure Regulator Valve (2)	71082
4. Expansion Valve (2)	71042
5. Filter Drier (2)	71010
6. Receiver (2)	75115
7. Sight Glass (2)	71011

SANI SERV PART NO.	VENDOR	VENDOR PART NO.
71011 SIGHT GLASS	SUPERIOR VALVE co. 1743 LARKIN WILLIAMS RD. FENTON, MO 63026 314-349-2211	60-6S
71042 EXPANSION VALVE	SPORLAN VALVE 7525 SUSSEX AVE. ST. LOUIS, MO 63143 314-647-2775	ADRI-1 0/55 3/8" MF INLET X 1/2" MF OUTLET

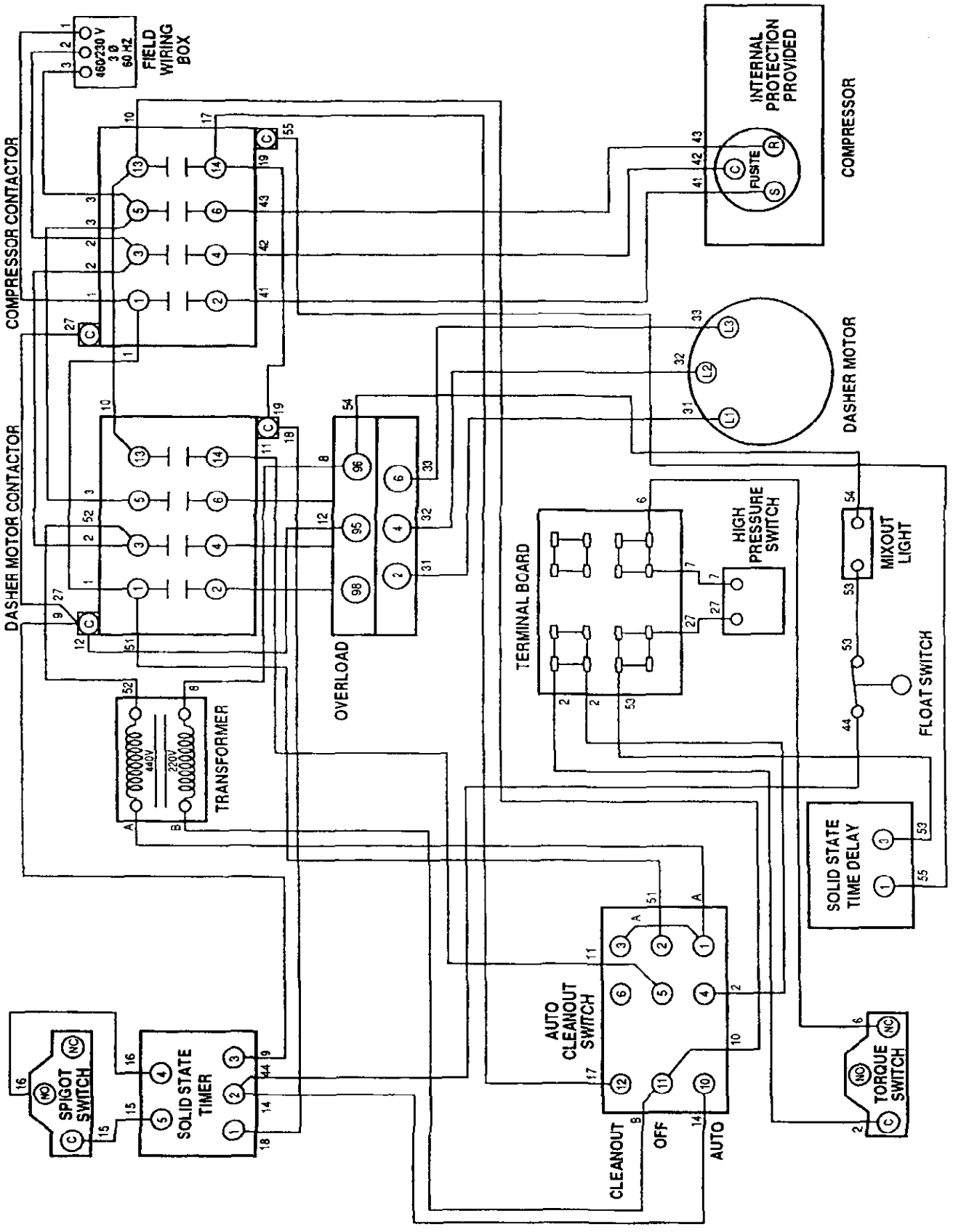
FIELD WIRING BOX
460/230 V 3 Ø 60 HZ
COMPRESSOR CONTACTOR
DASHER MOTOR CONTACTOR
INTERNAL PROTECTION PROVIDED
COMPRESSOR
FUSITE
DASHER MOTOR
OVERLOAD
TERMINAL BOARD
HIGH PRESSURE SWITCH
MIXOUT LIGHT
FLOAT SWITCH
TRANSFORMER
440V
220V
SOLID STATE TIME DELAY
AUTO CLEANOUT SWITCH
CLEANOUT
OFF
AUTO
TORQUE SWITCH
SPIGOT SWITCH
SOLID STATE TIMER

APPENDIX (MODEL A4243E INFORMATION ONLY)

MACHINE IDENTIFICATION

MODEL NUMBER	A4243E
NUMBER OF HEADS	2
COMPRESSOR HORSE POWER	2 (2)
DASHER HORSE POWER	1.25 (2)
APPROXIMATE GALLONS PER HOUR PER HEAD	15
VOLTAGE CODE	440/60/3Ø
WIDTH x DEPTH x HEIGHT	26.0 x 30.8 x 55.9
SHIPPING WEIGHT (LBS.)	615

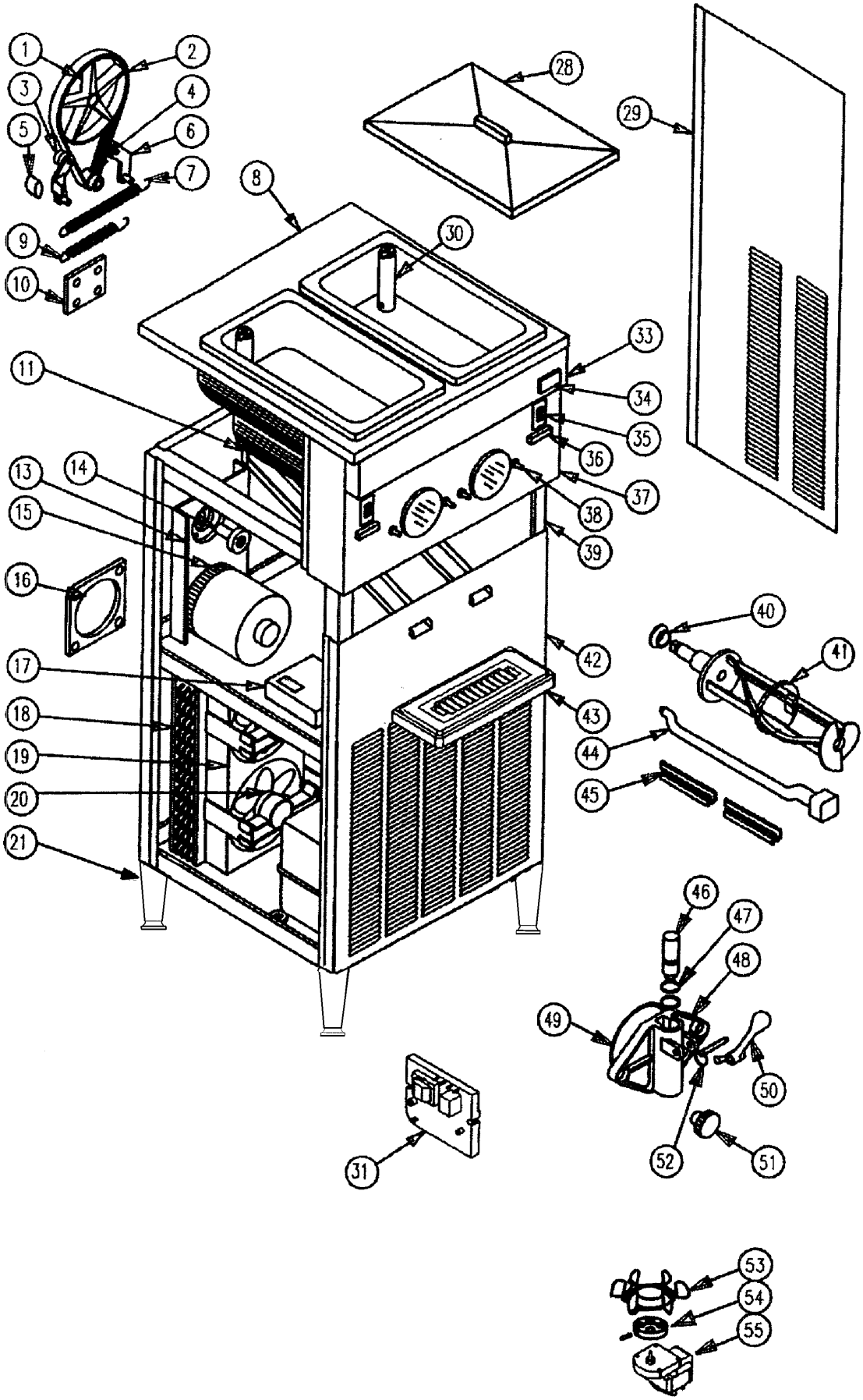

Figure 14. Model A4243E Exploded View (Sheet 1 of 2)

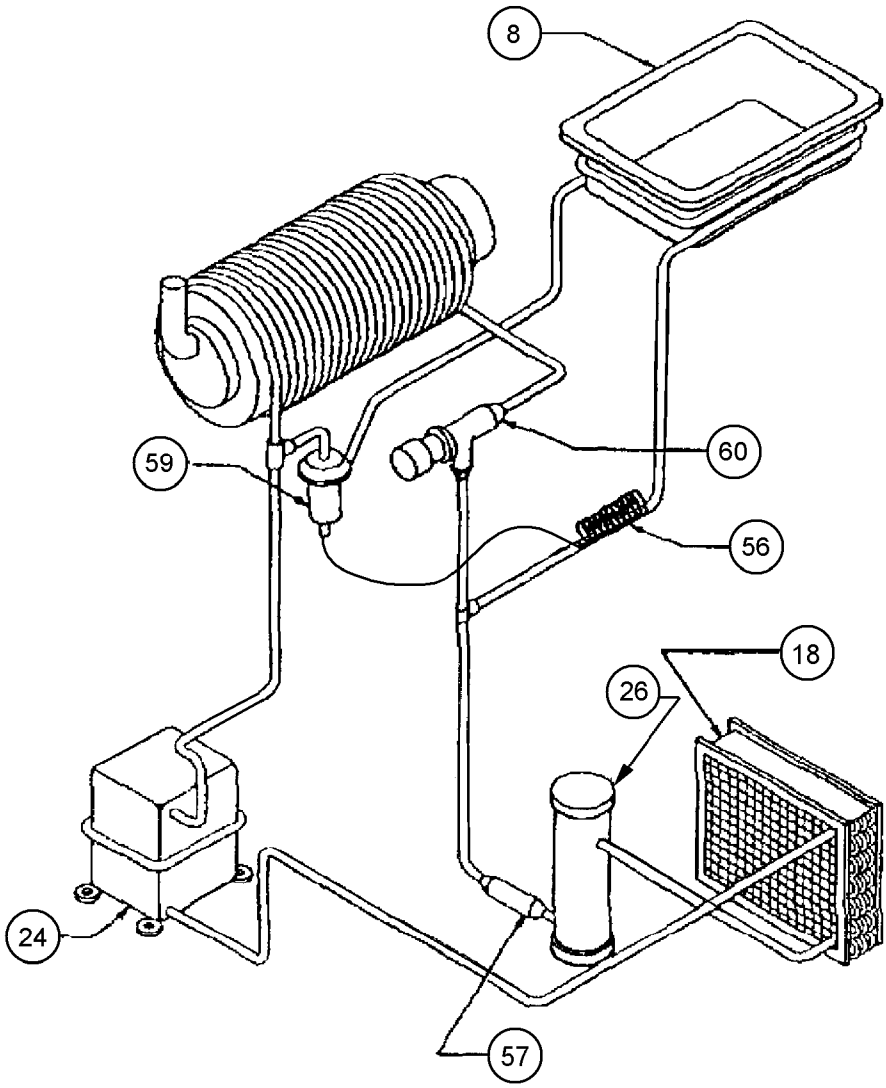

Figure 14. Model A4243E Exploded View (Sheet 2 of 2)

Model A4243E Parts List

Figure and Index Number	Description	Qty.	Part No.
14-1	·Driven Pulley (··Attaching Part, Not Illustrated)	2	10605
	·· Key 1/4" Square	2	3612
-2	·Belt	2	58891
-3	·Torque Idler	2	104973
-4	· Drive Pulley	2	10208
-5	·Cushion	2	104648
-6	·Belt Idler	2	103249
-7	·Idler Spring	2	64515
-8	·Mix Pan and Evaporator Top Cover Assembly	1	105632
-9	·Torque spring	2	64504
-10	·· Torque Bracket Assembly (··Attaching Parts, Not Illustrated)	2	106102
	·· Left Hand Torque Cable	2	106100
	·· Right Hand Torque Cable	2	105730
-11	· Drip Chute (··Attaching Part)	2	105360
	·· Hanger	2	105369
-12	· Air Cooled Back Panel	1	105651
-13	· Evaporator Support (··Attaching Part, Not Illustrated)	2	105762
	·· Torque Switch	2	70008
-14	· Bearing and Shaft	2	2858
-15	· Dasher Motor, 1 H.P., 3 Phase	2	75579
-16	· Motor Gasket	2	102427
-17	· High Pressure Switch	2	71090
-18	· Air Cooled Condenser Assembly (··Attaching Parts)	2	105234
	·· Air Cooled Condenser (··Attaching Part, Not Illustrated)	2	75427
	·· Condenser Support	2	105648
-19	· Shroud Assembly	2	105236
-20	· Fan Motor (··Attaching Parts, Not Illustrated)	4	75138
	·· Fan Blade	4	75312
	·· Fan Bracket	4	7199
-21	· Leg, Adjustable, 6-Inches Long	4	64145
-22	Not Used		
-23	Not Used		
-24	· Compressor, 2 H.P., 3 Phase	2	77219
-25	Not Used		
-26	· Receiver, Refrigerant	2	75115

Model A4243E Parts List

Figure and Index Number	Description	Qty.	Part No.
-27	Not Used		
-28	· Mix Pan Lid	2	107749
-29	· Side Panel	2	105653
-30	· Carburetor Tube (··Attaching Parts, Not Illustrated)	2	105692-01
	·· Insert	2	105979
	·· O-Ring	4	58947
-31	· Liquid level Control Board	2	70598
-32	Not Used		
-33	· Wiring Box Cover (··Attaching Parts, Not Illustrated)	1	105654-02
	·· Adapter Plate	1	105683
	·· Transformer	2	70582
-34	·· Logo	1	16039
-35	· Switch (··Attaching Part, Not Illustrated)	2	70023
	·· Switch Decal	2	9510-01
-36	· Mix Out light	2	61398
-37	· Upper Front Panel (··Attaching Hardware)	1	105649
-38	·· Front Plate Stud	4	7107
-39	· Frame (··Attaching Part, Not Illustrated)	1	108143
	·· Air Cooled Base Insert	1	108614
-40	· Rear Seal	2	108514
-41	· Dasher	2	3113-01
-42	· Lower Front Panel	1	105769
-43	· Drip Tray (··Attaching Parts, Not Illustrated)	1	108865
	·· Drip Tray Insert	1	108866
	·· Drip Tray Insert	1	108968
-44	· Stator Rod	2	65633
-45	· Scraper Blade	4	104984
-46	· Spigot Plunger (··Attaching Part)	2	105503
-47	·· Spigot Plunger O-Ring	4	58923
-48	· Front Plate (··Attaching Parts)	2	65631
-49	·· Front Plate O-Ring	2	58911
-50	·· Spigot Handle	2	65632-01
-51	·· Front Plate Knob	4	64065
-52	·· Faspin	2	64255
-53	· Mix Pan Agitator	2	108919

Model A4243E Parts List

Figure and Index Number	Description	Qty.	Part No.
-54	· Magnetic Drive	2	108928
-55	· Motor	2	75816
-56	· Capillary Tube	2	3084
-57	· Filter/Dryer	2	71010
-58	Not Used		
-59	· Evaporator Pressure Regulator (EPR) Valve	2	71082
-60	· Expansion Valve	2	71042

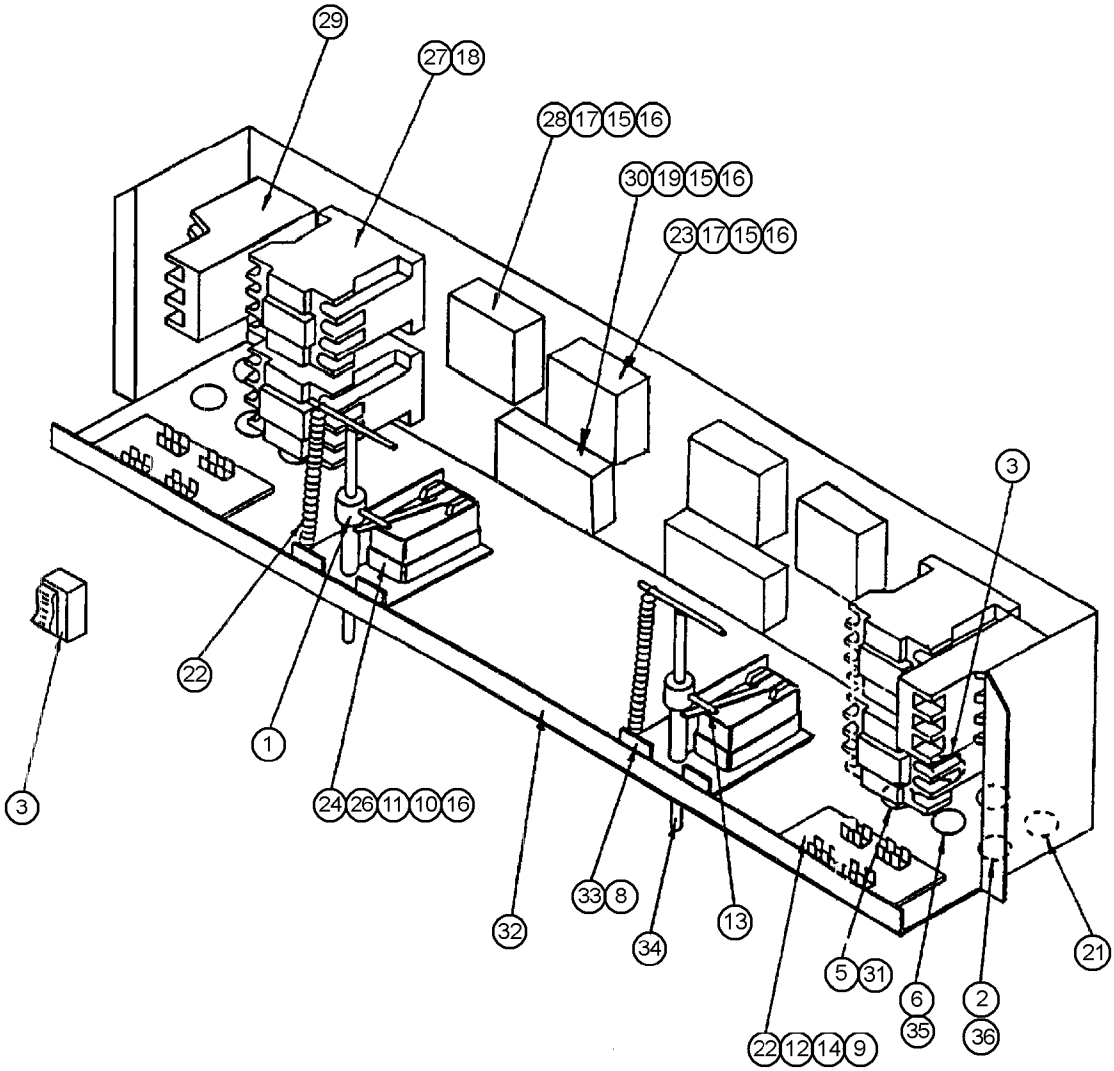

Figure 15. Wiring Box

Wiring Box Parts List

Figure and Index Number	Description	Qty.	Part No.
15-1	Shaft collar	2	10291
-2	Motor Cable	2	13053-01
-3	Torque Cable	2	13054
-4	Wire Cut List (Not Illustrated)	1	13125-22
-5	Power Cable	2	13129-01
-6	Compressor Cable	2	13130-01
-7	Not used		
-8	Screw, Flat Head, #10-32 x 1/4" Long	4	59978
-9	Nut, Hex, #10-32	4	60005
-10	Nut, Hex, #6-32	4	60007
-11	Screw, Round Head, #6-32 x 1-1/4" Long	4	60101
-12	Screw, Flat head, #10-32 x 5/8" Long	4	60116
-13	Screw, Set, 1/4"-20UNC x 1/2" Long	4	60186
-14	Washer, Lock, #10	4	60200
-15	Washer, Flat, Round 7/16" O.D.	8	60220
-16	Washer, Lock, #8, External Tooth	14	60285
-17	Screw, Sheet Metal, #10 x 1-1/4" Long	4	60303
-18	Screw, Sheet Metal, #8 x 3/4" Long	4	60308
-19	Screw, Sheet Metal, #10 x 2" Long	2	60319
-20	Terminal Board	2	61073
-21	Bushing, Snap, 7/8"	10	61132
-22	Spring, Plunger	4	64067
-23	Timer, Delay on Break (DOB)	2	70527
-24	Switch, Micro, Spigot	2	70008
-25	Switch, Rocker	2	70028
-26	Switch, Cover, Spigot	2	70068
-27	Contactor (Compressor and Dasher)	4	70125-01
-28	Time Delay	2	70533
-29	Overload Relay	2	70278-01
-30	Timer, Solid State	2	70532
-31	Bushing, Snap, 1.093"	2	61495
-32	Wiring Box	1	105647
-33	Bracket, Switch	2	105770
-34	Plunger	2	106005
-35	Cable 1, Transformer	2	13150
-36	Cable 2, Transformer	2	13161

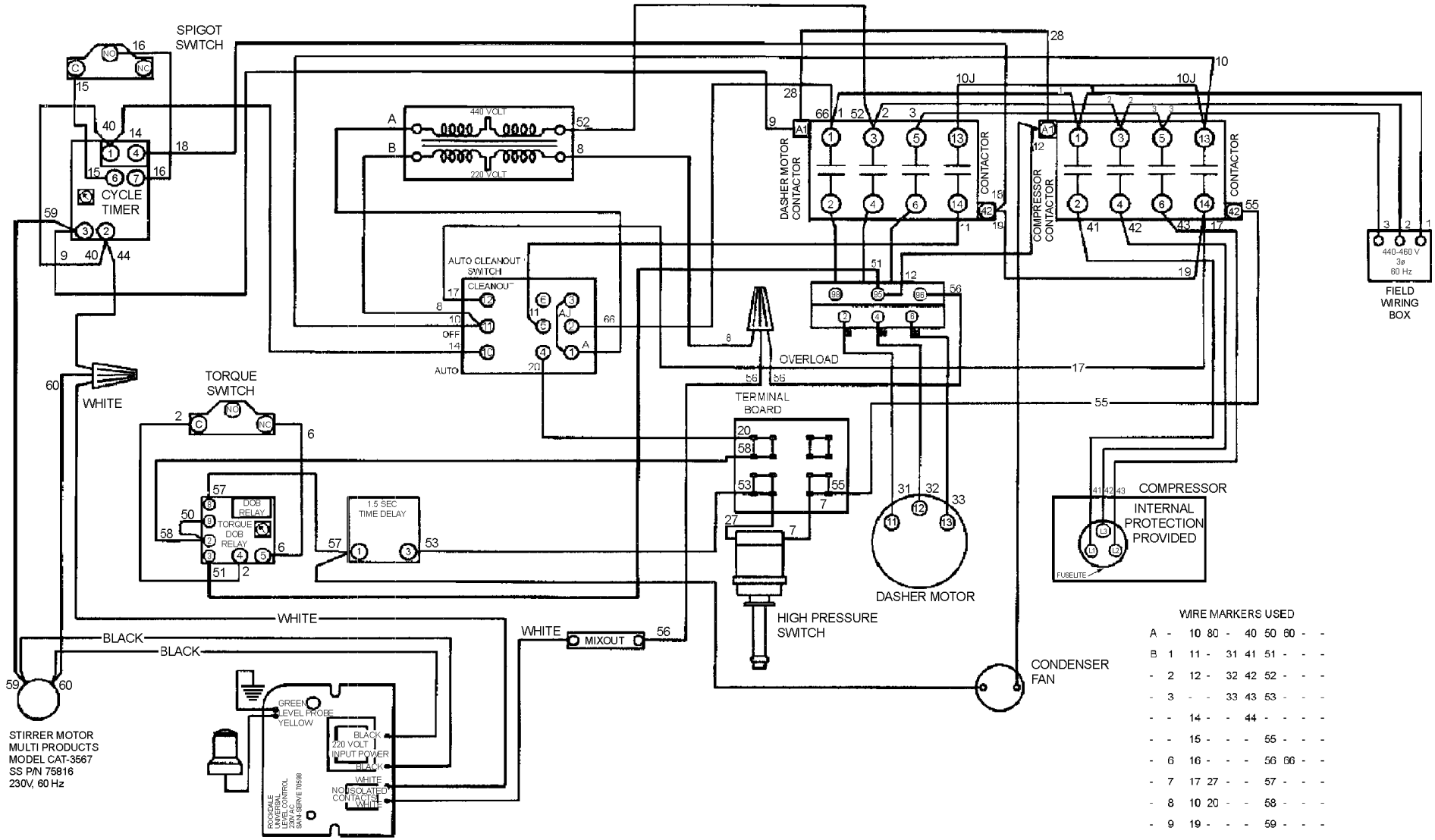

Figure 16. Electrical Schematic (Sheet 1 of 2)

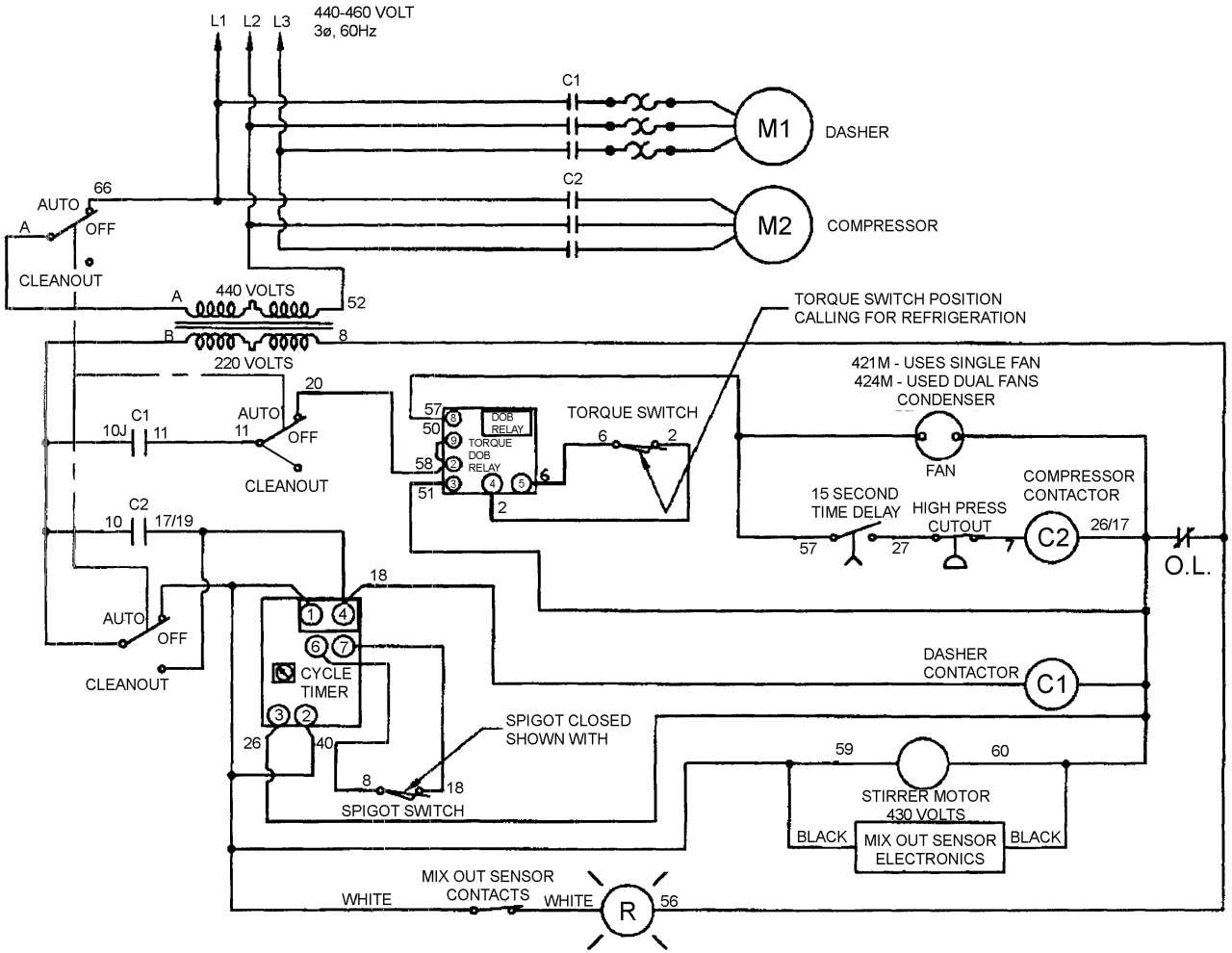

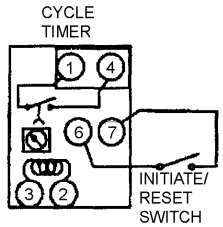

OPERATION:
APPLY SUPPLY VOLTAGE TO COIL, (3,2), WITH THE INITIATE SWITCH CLOSED, THE "OFF TIME" PERIOD BEGINS. WHEN THIS PERIOD ELAPSES (FIXED AT 600 SECONDS) THE RELAY CONTACTS CLOSE.
BEGINNING THE "ON TIME" PERIOD (ADJUSTABLE FROM 15 TO 45 SECONDS), WHEN THE INITIATE SWITCH IS OPEN, THE RELAY IS IN THE "ON TIME" MODE.

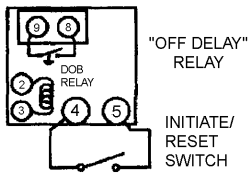

OPERATION:
APPLY SUPPLY VOLTAGE TO COILS, CLOSE INITIATE SWITCH, RELAY TRANSFERS AND THE CONTACTS CLOSE (8,9). OPEN THE INITIATE SWITCH AND TIMING BEGINS. WHEN THE FIXED TIME OF 5 SECONDS IS EXPIRED, THE CONTACTS WILL OPEN AGAIN.

Figure 16. Electrical Schematic (Sheet 2 of 2)

(Insert Classification of Publication Here) CLASSIFICATION:
Ref: NAVSEAINST 4160.3A NAVSEA S0005-AA-PRO-010/TMMP

NAVSEA/SPAWAR TECHNICAL MANUAL DEFICIENCY/EVALUATION REPORT (TMDER)

INSTRUCTION: Continue on 8 ½" x 11" paper if additional space is needed.

1. Use this report to indicate deficiencies, problems, and recommendations relating to a publication.
2. For TMDERs against clasified publications see OPNAVINST 5510H for mailing requirements.
3. Print clearly and carefully.
4. For TMDERs that affect more than one publication, submit a separate TMDER for each.
5. Submit TMDERs at web site http://nsdsa.phdnswc.navy.mil or mail to CDR NAVSURFWARCENDIV Code 310 TMDERs 4363 Missile Way Bldg 1388 Port Hueneme CA 93043-4307 or E-mail to TMDER@phdnswc.navy.mil.

1. PUBLICATION NO.	2. VOL/PART	3. REV/DATE or CHG/DATE	4. SYSTEM/EQUIPMENT ID

5. TITLE OF PUBLICATION	6. REPORT CONTROL NUMBER (6 digit UIC-YY-any four: xxxxxx-01-xxxx)

7. RECOMMENDED CHANGES TO PUBLICATION

7a. Page #	7b. Para #	7c. RECOMMENDED CHANGES AND REASONS

8. ORIGINATOR'S NAME and WORK CENTER	9. DATE	10. PHONES Commercial/DSN/FAX Include extensions	11. TMMA of manual (NSDSA will complete)

12. Ship or Activity Name and Address (Include UIC/CAGE/HULL)	13. ORIGINATOR'S E-MAIL ADDRESS

FOLD HERE AND TAPE SECURELY
PLEASE DO NOT STAPLE

INCLUDE COMPLETE ADDRESS

USE
PROPER
POSTAGE

FOR OFFICIAL USE ONLY

COMMANDER
CODE 5E30DP BLDG 1388
NAVSURFWARCENDIV NSDSA
4363 MISSILE WAY
PORT HUENEME CA 93043-4307

FOLD HERE AND TAPE SECURELY
PLEASE DO NOT STAPLE