S6163-CP-MMC-010

0910-LP-108-6567

TECHNICAL MANUAL

INSTALLATION, OPERATION,
AND MAINTENANCE

CLEVELAND KET & TKET SERIES KETTLES

DISTRIBUTION STATEMENT C: DISTRIBUTION AUTHORIZED TO U.S. GOVERNMENT AGENCIES AND THEIR CONTRACTORS; ADMINISTRATIVE/OPERATIONAL USE; 30 MARCH 2009. OTHR REQUESTS FOR THIS DOCUMENT MUST BE REFERRED TO NSWC, PHILADELPHIA CODE 944.

WARNING: THIS DOCUMENT CONTAINS TECHNICAL DATA WHOSE EXPORT IS RESTRICTED BY THE ARMS EXPORT CONTROL ACT (TITLE 22, U.S.C. SEC. 2751 ET.SEQ.) OR EXECUTIVE ORDER 12470. VIOLATIONS OF THESE EXPORT LAWS ARE SUBJECT TO SEVERE CRIMINAL PENALTIES.

DESTRUCTION NOTE: DESTROY BY ANY METHOD THAT WILL PREVENT DISCLOSURE OF CONTENTS OR RECONSTRUCTION OF THE DOCUMENT.

PUBLISHED BY DIRECTION OF COMMANDER, NAVAL SEA SYSTEMS COMMAND

30 MARCH 2009

Operators Manual

Installation, Operation & Service

Electric Table Top Kettles

For units built after August 1999

MODELS:

Single Kettles

KET-3-T
KET-6-T
KET-12-T
KET-20-T*

Twin Kettles

TKET-3-T
TKET-6-T
TKET-12-T

*Floor Type Leg Mount

Cleveland
Enodis

1333 East 179th St., Cleveland, Ohio, U.S.A. 44110

Phone: (216) 481-4900 Fax: (216) 481-3782
Visit our web site at www.clevelandrange.com

SE95004 Rev. 4

TABLE OF CONTENTS

Installation

General 1
Inspection 1
Shipping Damage Instructions 1
Installation 1
Clearance Requirements 1
Pour Paths 1
Assembly 2
Electrical 2
Wire Connection 2
Water 3
Installation Checks 3
Cleaning 3

Operating Instructions

General Parts Drawing 4
Operating the Kettle 5
Temperature Range Chart 5
Approximate Boiling Times 5
Marine Lock 6

Cleaning Instructions

Care & Cleaning 6
Marine Lock 7

Service Parts

Warranty 8
Faucet Assembly 8
Kettle Bottom & Side 9
Cord & Plug Option 10
Console Components & Marine Lock 11-12
Tilting Gearbox Assembly 13
Electrical Panel 14

Maintenance

Inspection & Maintenance Check List 15
Bearing Lubrication Procedure 16
Calibrating Procedure 17
Pressure Relief Valve Periodic Testing Procedure 17
Reservoir Fill Procedures 18
Kettle Venting Instructions 18
Vacuum Leak Test Procedure 19
Repairing Leaks in Steam Jacketed Kettle Fittings 19
Marine Lock Testing Procedure 19
Diagnostic Guide 20-22
Wiring Diagrams 23-24

Symbol Legend 25-26

INSTALLATION

GENERAL

Installation of the kettle must be accomplished by qualified electrical installation personnel working to all applicable local and national codes. Improper installation of product could cause injury or damage.

This equipment is built to comply with applicable standards for manufacturers. Included among those approval agencies are: UL, NSF, ASME/Ntl. Bd., CSA, CGA, ETL, and others. Many local codes exist, and it is the responsibility of the owner/installer to comply with these codes.

Note: Maximum voltage for LVD (low volt directive for Europe) to be 440 volts for CE marked appliances.

INSPECTION

Before unpacking visually inspect the unit for evidence of damage during shipping.

If damage is noticed, do not unpack the unit, follow Shipping Damage Instructions shown below.

SHIPPING DAMAGE INSTRUCTIONS

If shipping damage to the unit is discovered or suspected, observe the following guidelines in preparing a shipping damage claim.

1. Write down a description of the damage or the reason for suspecting damage as soon as it is discovered. This will help in filling out the claim forms later.
2. As soon as damage is discovered or suspected, notify the carrier that delivered the shipment.
3. Arrange for the carrier's representative to examine the damage.
4. Fill out all carrier claims forms and have the examining carrier sign and date each form.

INSTALLATION

The first installation step is to refer to the Specification Sheets or Specification Drawings for detailed clearance requirements of the kettle. Next, carefully cut open the shipping carton for easy removal of the kettle.

CLEARANCE REQUIREMENTS

Model #	Back*	Left Side	Right Side
KET-3-T	2 1/4”	0	0
KET-6-T	2 3/4”	0	0
KET-12-T	5 1/2”	0	0
KET-20-T	8”	0	0
TKET-3-T	6 5/8”	0	0
TKET-6-T	7 1/8”	0	0
TKET-12-T	9 7/8”	0	0

* From back of mounting base.

POUR PATH

Kettle Size	Min.	Max.
3 Gallon	2”	12”
6 Gallon	3.5”	18”
12 Gallon	4”	24”
20 Gallon	6”	28”

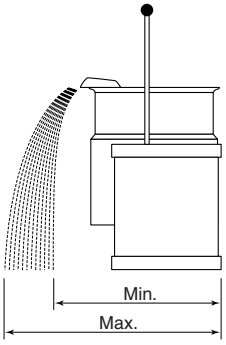

ASSEMBLY

Table-Top Models (3, 6 & 12 gallon)

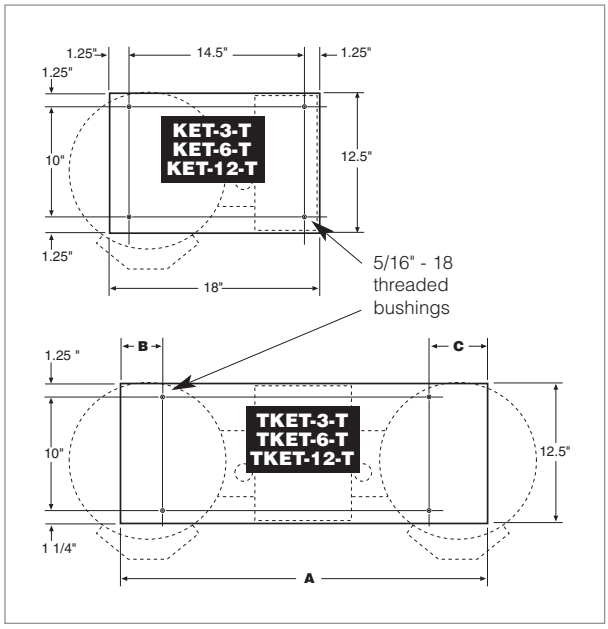

Model #	A	B	C
TKET-3-T	18"	2.25"	1.25"
TKET-6-T	24"	4.63"	4.63"
TKET-12-T	30"	7.75"	7.75"

Base Mounting Diagram

Table-top models (3, 6 & 12 gallon - single and twin) must be positioned on a firm, level stand, or existing counter top, and bolted in place. These models are supplied with four threaded mounting bushings welded to the underside of the base. An optional support stand with level adjustable legs is available. Once the kettle is secure, screw tilt handle into the threaded hole provided at the right side of kettle.

Floor Type Leg Mount Models (20 gallon)

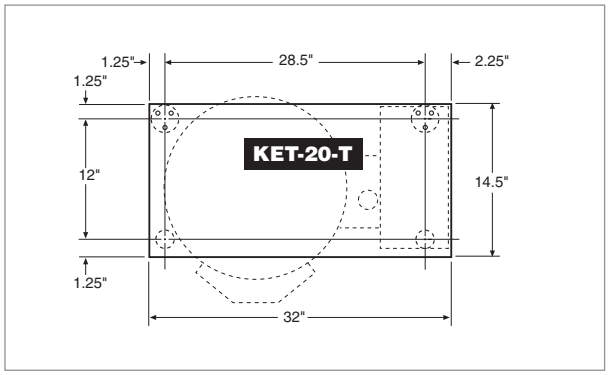

Base Mounting Diagram

Position on a firm, level surface, and bolt two flange feet in place. Once the kettle is secure, screw tilt handle into the threaded hole provided at the right of kettle.

ELECTRICAL

ENSURE THE ELECTRICAL SUPPLY MATCHES THE KETTLE'S REQUIREMENTS AS STATED ON THE RATING LABEL.

This kettle is built to comply with applicable standards of manufacturers. Included among these approval agencies are UL, NSF, ASME/Ntl. Bd., CSA, ETL, and others. Many local codes exist, and it is the responsibility of the owner and installer to comply with these codes.

The electrical supply must match the power requirements specified on the kettle's rating plate. The copper wiring must be adequate to carry the required current at the rated voltage. Refer to the Specification Sheet for all electrical specifications.

Note: Maximum voltage for LVD (low volt directive for Europe) to be 440 volts for CE marked appliances.

WIRE CONNECTION

If unit does not have cord and plug option, remove the four screws securing the console cover and remove the cover. A wiring diagram is affixed to the underside of the cover. Feed permanent copper wiring through the cut-out in the rear or bottom of the console, and fasten to the three connection terminal block, which is mounted on the top of the console's control panel. Be sure to connect the ground wire to the separate ground terminal connector (ground lug). Replace console cover and secure it with the four screws.

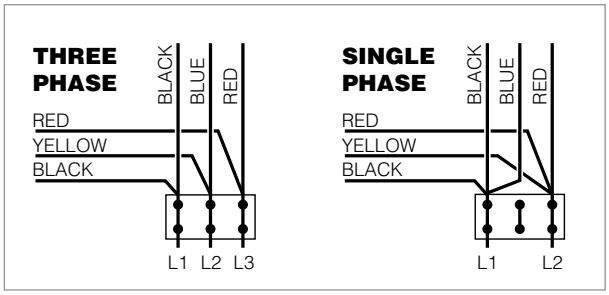

The kettle is wired for 3-phase operation at the factory. For single phase operation, rewire the terminal block to that shown in the above diagram.

WATER

The sealed jacket of the electric kettle is precharged with the correct amount of a water based formula, and therefore, no water connection is required to the kettle jacket. The kettle can be equipped with optional hot and/or cold water faucet, requiring 1/2" copper tubing as supply lines.

INSTALLATION CHECKS

Although the kettle has been thoroughly tested before leaving the factory, the installer is responsible for ensuring the proper operation of kettle once installed.

Visual Checks

1. Check Marine Lock. See Marine Lock Testing Procedure (page 19).
2. Check Tilting:

   A/ Handle is in place and firmly tightened.

   B/ Kettle tilts smoothly and freely.
3. Insure there are:

   A/ Four screws securely holding the console cover.

   B/ The bottom cover is in place and held with a nut.

Performance Checks

1. Supply power to the kettle by placing the fused disconnect switch to the "ON" position.

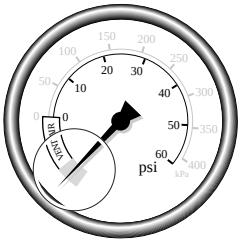

2. Before turning the kettle on, read the Vacuum/Pressure Gauge (**2**). The gauge's needle should be in the green zone. If the needle is in the "VENT AIR" zone, follow Kettle Venting Procedure on page 18 of this manual.
3. Turn the kettle's ON/OFF Switch/Solid State Temperature Control (**5**) to "1" (Min.). The Heat Indicator Light (Green) (**6**) should remain lit, indicating the element is on, until the set temperature is reached (130°F/54°C). Then the green light will cycle on and off, indicating the element is cycling on and off to maintain temperature.
4. Tilt the kettle forward. The Low Water Indicator Light (Red) (**4**) should be lit when the kettle is in a tilted position. This light indicates that the element has automatically been shut off by the kettle's safety circuit. This is a normal condition when the kettle is in a tilted position.
5. Raise the kettle to the upright position. The Low Water Indicator Light (Red) (**4**) should go out when the kettle is upright. If the red light remains lit in the upright position, it indicates a low water condition, and water must be added to the reservoir before the kettle can be operated. Refer to the Reservoir Fill Procedures on page 18 of this manual.
6. Turn the ON/OFF Switch/Solid State Temperature Control (**5**) to "10" (Max.) and allow the kettle to preheat. The green light should remain on until the set temperature (260°F/127°C) is reached. Then the green light will cycle ON and OFF, indicating the element is cycling ON and OFF to maintain temperature. Fill the kettle with cold water to the steam jacket's welded seam. Refer to the Temperature Range Chart on page 5 for the time required to bring the water to a boil.
7. When all testing is complete, empty the kettle and turn the ON/OFF Switch/Solid State Temperature Control (**5**) to the “OFF” position.

CLEANING

After installation the kettle must be thoroughly cleaned and sanitized prior to cooking. See complete cleaning instructions on page 6 of this manual.

OPERATING INSTRUCTIONS

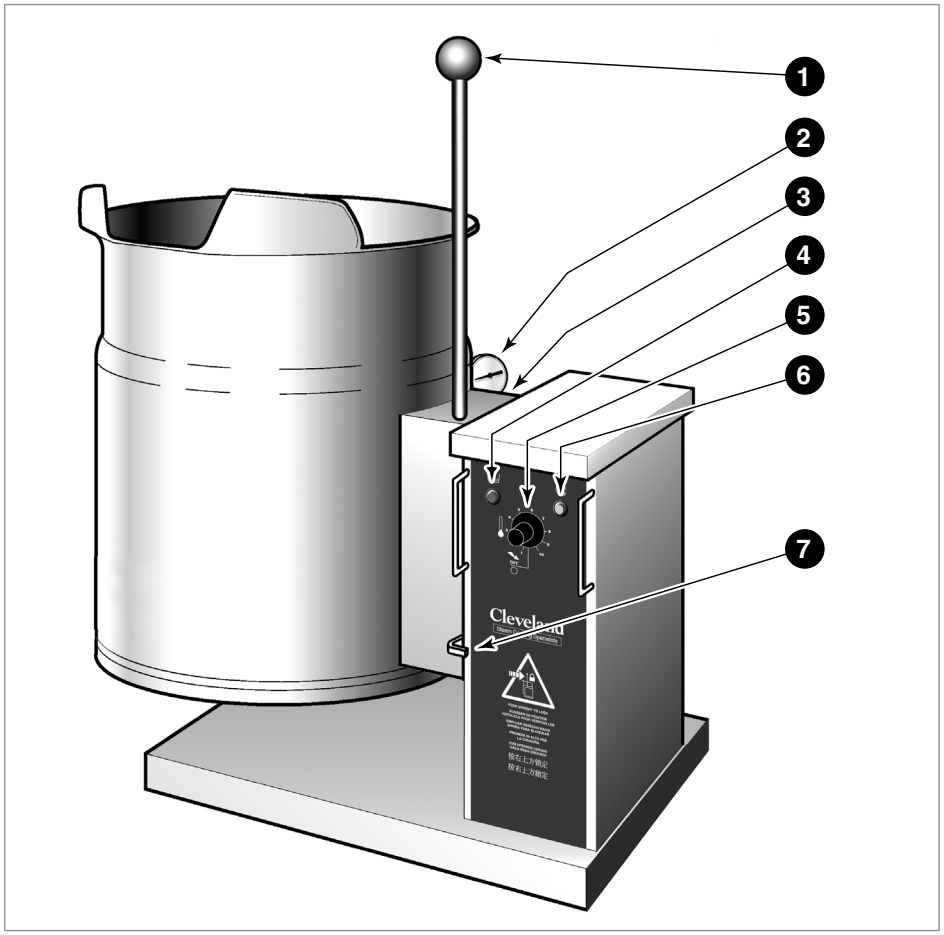

General Parts Drawing

ITEM #	DESCRIPTION	FUNCTION
1.	Tilting Handle	Used for tilting the kettle.
2.	Vacuum/Pressure Gauge	Indicate steam pressure in PSI inside steam jacket as well as vacuum in inches of mercury.
3.	Pressure Relief Valve (not shown)	This valve is used to vent the kettle and in the unlikely event there is an excess steam build-up in the jacket, this valve opens automatically to relieve this pressure.
4.	Low Water Indicator Light (Red)	When lit, indicates that the kettle is low on water and will not operate in this condition (see Reservoir Fill Procedures on page 18 of this manual).
5.	On-Off Switch/ Solid State Temperature Control	Turns kettle ON/OFF and allows the operator to adjust the kettle temperature in increments from 1 (Min.) to 10 (Max.). (see Temperature Range Chart in the Operating Instructions section on page 5 of this manual).
6.	Heat Indicator Light (Green)	When lit, indicates that the kettle's element is on. Cycles ON-OFF with element.
7.	Marine Lock	Prevents unit from accidental tilting.

OPERATING THE KETTLE

DO NOT LEAN ON OR PLACE OBJECTS ON KETTLE LIP. SERIOUS INJURY COULD RESULT IF KETTLE TIPPED OVER, SPILLING HOT CONTENTS.

1. Before turning kettle on, read the Vacuum/Pressure Gauge (**2**). The gauges needle should be in the green zone. If the needle is in the "VENT AIR" zone, refer to the Kettle Venting Instructions (page 18). Any air that may be present will increase cooking times. Once heated, the kettle's normal maximum operating pressure is approximately 10-12 psi, while cooking a water base product.

2. Ensure that the electrical service to the kettle is turned on at the fused disconnect switch.

Temperature Control Setting	Approximate Product Temperature °F	°C
1. (Min.)	130	54
2.	145	63
3.	160	71
4.	170	77
5.	185	85
6.	195	91
7.	210	99
8.	230	110
9.	245	118
10. (Max.)	260	127

NOTE: Certain combinations of ingredients will result in temperature variations

Temperature Range Chart

3. Preheat the kettle by turning the ON/OFF Switch/Solid State Temperature Control (**5**) to the desired temperature setting (see above "Temperature Range Chart"). The Heat Indicator Light (Green) (**6**) will remain lit, indicating the element is on, until the temperature setting is reached. When the green light goes off, the elements are off, and preheating is complete.

NOTE: When cooking egg and milk products, the kettle should not be preheated, as products of this nature adhere to hot cooking surfaces. These types of food should be placed in the kettle before heating is begun.

4. Place food product into the kettle. The Heat Indicator Light (Green) (**6**) will cycle on and off indicating the elements are cycling on and off to maintain the set temperature.

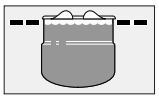

NOTE: Do not fill kettle above recommended level marked on outside of kettle.

NOTE: The Low Water Indicator Light (Red) (**4**) should not be lit during kettle operation. This light indicates that the elements have been automatically shut off by the kettle's safety circuit. It is normal for the red light to come on when the kettle is in a tilted position. However, the kettle cannot be operated when the red light remains lit while the kettle is in the upright position. This indicates a low water condition, and water must be added to the reservoir. Refer to Reservoir Fill Procedures on page 18 of this manual for details.

5. When cooking is completed turn ON/OFF Switch/Solid State Temperature Control (**5**) to the "OFF' position.

6. Pour the contents of the kettle into an appropriate container by tilting the kettle forward. Care should be taken to pour slowly enough to avoid splashing off the product.

NOTE: As with cleaning food soil from any cookware, an important part of kettle cleaning is to prevent food from drying on. For this reason, cleaning should be completed immediately after cooked foods are removed. Refer to the Cleaning Instructions (page 6) for detailed kettle washing procedures.

APPROXIMATE BOILING TIMES

The accompanying chart shows approximate times required for electric kettles of various capacities to boil water. The ON/OFF Switch/Solid State Temperature Control must be set at "**10**" (Max.) throughout the heat-up period. Water will boil about 1/3 faster if the kettle is filled only to the outer steam jacket's welded seam resulting in a kettle filled to 2/3 capacity.

Kettle Capacity	Minutes
3 gallon/11 litre	15
6 gallon/23 litre	20
12 gallon/45 litre	25
20 gallon/80 litre	40

Approximate Boiling Times

MARINE LOCK

Your unit is equipped with a marine lock to prevent accidental tilting. The following procedure should be used to tilt the kettle.

1. Grasp the tilt handle.
2. Hold the latch down to unlock tilting mechanism.
3. Pull the handle to tilt kettle.
4. To lock, return the kettle to its upright position and push handle back.

NOTE: Inspect lock daily to ensure it is free moving and does not bind or stick. Clean lock if necessary (see Cleaning Instructions below for details).

CLEANING INSTRUCTIONS

CARE AND CLEANING

Your kettle must be cleaned regularly to maintain its fast, efficient cooking performance, and to ensure its continued safe, reliable operation.

Chloride Cleaners

WARNING: Do not use chloride base detergents. There is a growing number of non-chloride cleaners available. If unsure of the cleaners chlorine content consult the supplier. Also avoid cleaners containing quaternary salt as they can cause the stainless steel to pit and rust.

WARNING: If any gaskets or seals are found defective, replace or repair immediately. (See Service Parts Drawings for part identification.)

1. Place the kettle's On-Off Switch/Solid State Temperature Control (**5**) to the "OFF" position.
2. Prepare a warm water and mild detergent solution in the kettle.
3. Remove food soil inside the kettle using a nylon brush.

Wire Brush & Scrapers

WARNING: Do not use a metal bristle brush or scraper, as this may permanently damage the kettle's stainless steel surface.

4. Loosen food which is stuck to the kettle by allowing it to soak at a low temperature setting.
5. If the kettle is equipped with a draw-off valve, it should be cleaned as follows:
   - **a)** Remove drain screen from bottom of kettle. Thoroughly wash and rinse the screen either in a sink or a dishwasher, then replace it into the kettle.
   - **b)** Disassemble the draw-off valve first by turning the valve knob counter-clockwise, then turning the large hex nut counter-clockwise until the valve stem is free of the valve body.
   - **c)** In a sink, wash and rinse the inside of the valve body using a nylon brush.
   - **d)** Reassemble the draw-off valve by reversing the procedure for disassembly. The valve's hex nut should be hand tight only.
6. Rinse kettle interior thoroughly, then drain the rinse water. Do not leave water sitting in unit when not in use.
7. Using mild soapy water and a damp sponge, wash the exterior of the kettle, rinse, and dry.

NOTE: For more difficult cleaning applications one of the following can be used: alcohol, baking soda, vinegar, or a solution of ammonia in water.

Avoid the use of chloride cleansers, which may damage the kettle's stainless steel surface.

Steel Pads

WARNING: Steel wool should never be used for cleaning the cooking chamber of the kettle. Particles of steel wool become embedded in the cooking surface and rust, which may corrode the stainless steel.

NOTE: Unit should not be cleaned with a water jet.

8. Leave the cover off when the kettle is not in use.

RECOMMENDED CLEANERS FOR SPECIFIC SITUATIONS

Job	Cleaning Agent	Comments
Routine Cleaning	Soap, Ammonia Detergent, Medallion	Apply with cloth or sponge
Fingerprints & Smears	Arcal 20, Lac-O-Nu Ecoshine	Provides barrier film
Stubborn Stains & Discolouration	Cameo, Talc, Zud First Impression	Rub in direction of polish lines
Grease & Fatty Acids, Blood, Burnt-On Foods	Easy-Off, De-Grease It Oven Aid	Excellent removal on all finishes
Grease & Oil	Any good commercial detergent	Apply with sponge or cloth
Restoration/ Passivation	Benefit, Super Sheen	

MARINE LOCK

Use a small nylon bristle brush to remove food and debris from pivot point. If lock is still sticking have maintenance disassemble and clean pieces individually and reassemble.

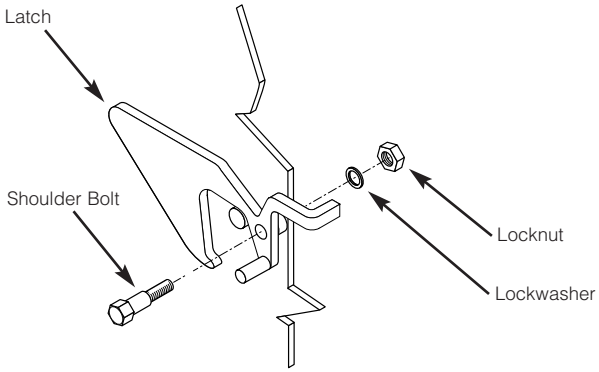

Disassembly

1. Disconnect power from kettle.
2. Remove console cover from top of kettle's console.
3. Remove locknut and lockwasher from inside console.
4. Remove shoulder bold from latch.
5. Clean all parts.

Re-Assembly

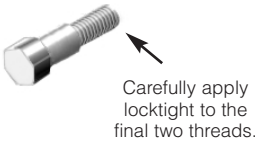

6. Apply locktight to shoulderbolt where illustrated. Replace shoulder bolt and latch and tighten firmly.
7. Replace lockwasher and locknut inside the console and tighten firmly.
8. Test Marine Lock. See Marine Lock Testing Procedure (page 19).
9. Replace console cover.

SERVICE PARTS

WARRANTY

Our Company supports a worldwide network of Maintenance and Repair Centers. Contact your nearest Maintenance and Repair Centre for replacement parts, service, or information regarding the proper maintenance and repair of your cooking equipment

In order to preserve the various agency safety certification (UL, NSF, ASME/Ntl. Bd., etc.), only factory-supplied replacement parts should be used. The use of other than factory supplied replacement parts will void warranty.

FAUCET ASSEMBLY

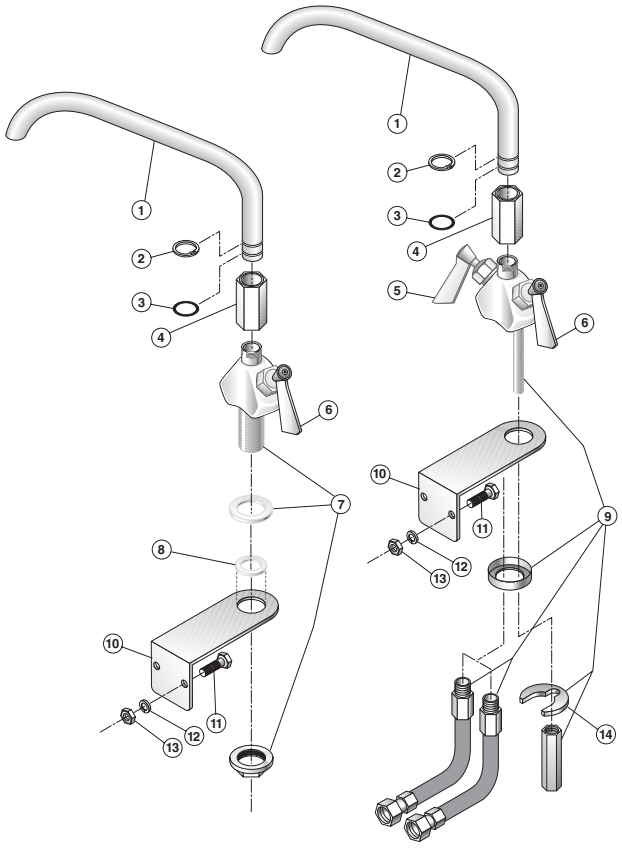

ITEM NO.	PART NO.	DESCRIPTION	QTY.
1.	KE50825-2	3/4" Spout (KET-3/6/12/20-T)	1
	KE50825-9	3/4" Spout (TKET-3/6/12-T)	1
2.	FA95022	Retaining Ring	1
3.	FA05002-19	"O" Ring	1
4.	KE51736	Long Faucet Nut	1
5.	SE50020	Hot Water Stem Assembly (Double Pantry only)	1
6.	SE50021	Cold Water Stem Assembly	1
7.	KE51401	Single Pantry Body (c/w Item No. 6)	1
8.	KE50335	Adapter Washer (Single Pantry only)	1
9.	KE51403	Double Pantry Body (c/w Item No. 5&6)	1
10.	KE54159	Faucet Mounting Bracket	1
11.	FA11258	Hex Cap Screw	2
12.	FA30505	Washer	2
13.	FA21008	Hex Nut	2
14.	SE50447	Washer Horseshoe	1

KETTLE BOTTOM & SIDE

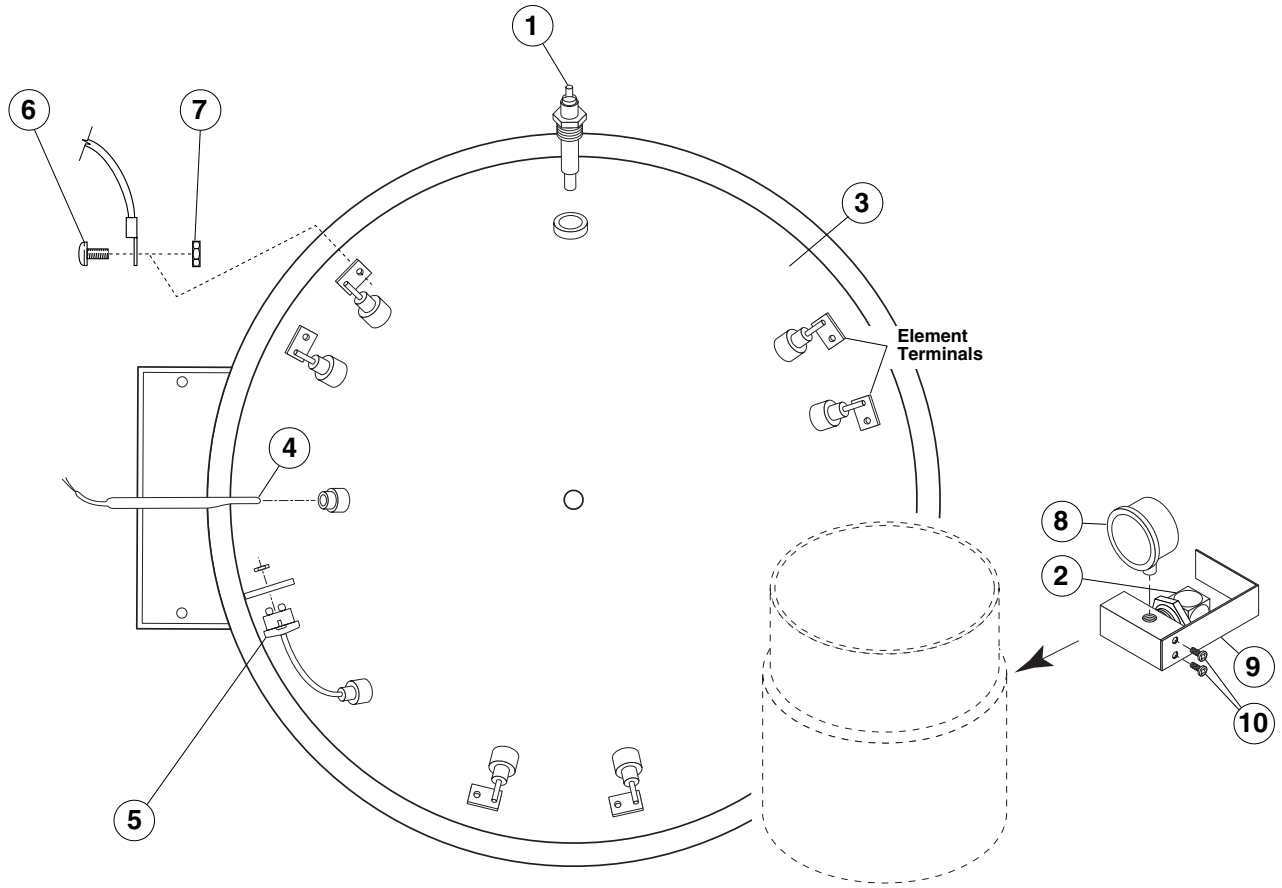

ITEM NO.	PART NO.	DESCRIPTION	QTY.
1.	KE50556-1	Probe, Low Water	1
2.	KE51723	Safety Valve, 50 PSI, 1/2"	1
3.	KE52455	Bottom Cover Gasket, 3 gallon kettle	1
	KE52456	Bottom Cover Gasket, 6 gallon kettle	1
	KE52457	Bottom Cover Gasket, 12 gallon kettle	1
	KE52459	Bottom Cover Gasket, 20 gallon kettle	1
4.	KE00515	Thermistor Assembly	1
5.	KE50558	Safety Thermostat (140° C)	1
6.	FA11145	Screw	2-12
7.	FA21007	Nut	2-12
8.	KE50429-3	Pressure Gauge	1
9.	KE54852-1	Guard Bracket, Pressure Relief Valve	1
10.	FA11145	Screw, 10-32 x 3/8" SS	2

CORD & PLUG OPTION

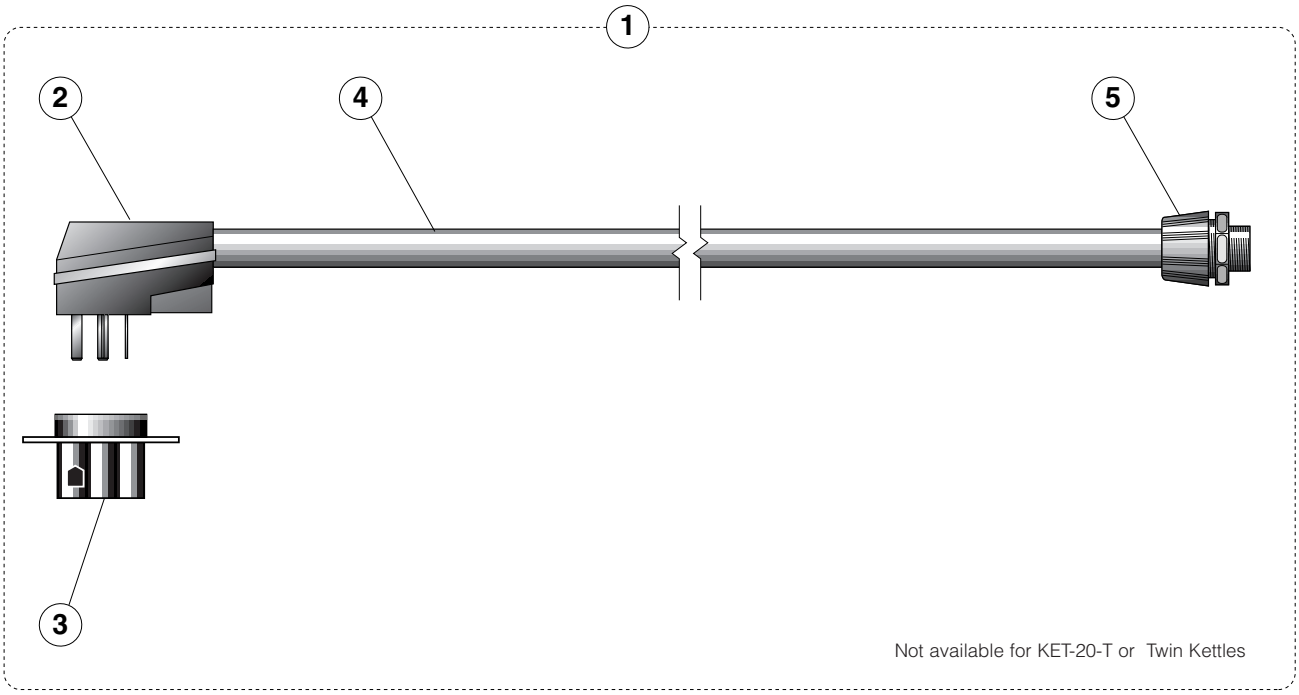

ITEM NO.	PART NO.	DESCRIPTION	QTY.
FOR KET-6-T (SW)			*(200-240VAC, 3PH, 50/60Hz*
1.	KE02113-1	Cord Plug Assembly	1
2.	KE54819-1	Plug (30A)	1
3.	KE54820-1	Receptacle (30A)	1
4.	KE54821-2	Electrical Cord (10/4)	1
5.	KE54721-3	Cord Connector	1
FOR KET-6-T (HW), KET-12-T (SW),			*(200-240VAC, 3PH, 50/60Hz*
1.	KE02113-2	Cord Plug Assembly	1
2.	KE54819-2	Plug (50A)	1
3.	KE54820-2	Receptacle (50A)	1
4.	KE54821-3	Electrical Cord (8/4)	1
5.	KE54721-4	Cord Connector	1
FOR KET-12-T (HW)			*(200-240VAC, 3PH, 50/60Hz*
1.	KE02113-3	Cord Plug Assembly	1
2.	KE54819-2	Plug (50A)	1
3.	KE54820-2	Receptacle (50A)	1
4.	KE54821-4	Electrical Cord (6/4)	1
5.	KE54721-5	Cord Connector	1

CONSOLE COMPONENTS & MARINE LOCK

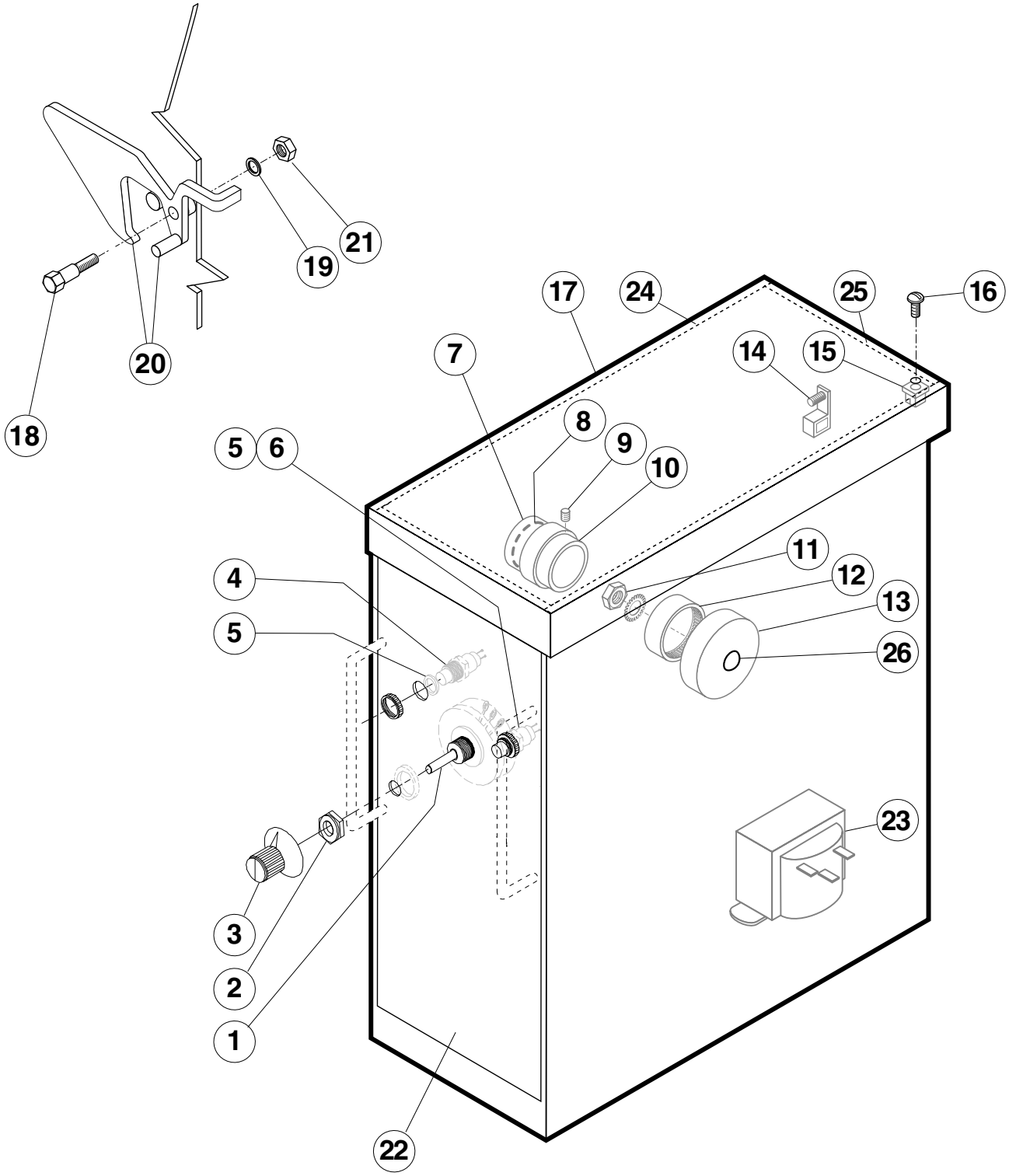

CONSOLE COMPONENTS & MARINE LOCK

ITEM NO.	PART NO.	DESCRIPTION	QTY. Single / Twin
1.	SE00114	Potentiometer with ON/OFF Switch, c/w Item #2	1/ 2
2.	KE51005	Rubber Boot	1/ 2
3.	KE50569-1	Knob, Potentiometer	1/ 2
4.	KE50567-1	L.E.D., Red	1/ 2
5.	FA05002-18	"O" Ring	2 / 4
6.	KE50568-1	L.E.D., Green	1/ 2
7.	KE54234	Bearing, Bronze Trunnion	1/ 2
8.	FA05002-20	"O" Ring	1/ 2
9.	FA19184	Allen Screw	2/ 4
10.	SK50047	Collar, Trunnion Lock	1/ 2
11.	FA21024	Hex Nut, 5/16-18	1/ 2
12.	KE51711	Needle Roller Bearing	1/ 2
13.	KE517064	Bearing Housing	1/ 2
14.	KE50473	Ground Lug	1/ 2
15.	FA95062	Nylon Anchor Nut	4
16.	FA95062	Screw	4
17.	KE54218	***Console Covers*** (KET-3-T, KET-6-T, KET-12-T, KET-20-T, TKET-3-T)	1
	KE542181	(TKET-6-T, TKET-12-T)	1
		Marine Lock	
18.	FA15019-1	Hex Socket Shoulder Bolt	1/ 2
19.	FA31029	Split Lockwasher	1/ 2
20.	KE02078-1	Latch, Left Hand	1
	KE02078-2	Latch, Right Hand	1
21.	FA21008	Hex Nut, 1/4-20	1/ 2
22.		***Labels***	
	KE95555-1	(KET-3-T, KET-6-T, KET-12-T, KET-20-T)	1
	KE95555-3	(TKET-3-T)	1
	KE95555-4	(TKET-6-T, TKET-12-T)	1
23.		***Transformers***	
	KE53838-11	Transformer, 380 to 415v	1
	KE53838-12	Transformer, 440 to 480v	1
	KE53838-13	Transformer, 600v	1
24.	KE53599-4	Cover Gasket, long	2
25.	KE53599-5	Cover Gasket, short	2
26.	FA95073	Round Head Square Neck Bolt	1

TILTING GEARBOX ASSEMBLY

(12 gallon kettle only)

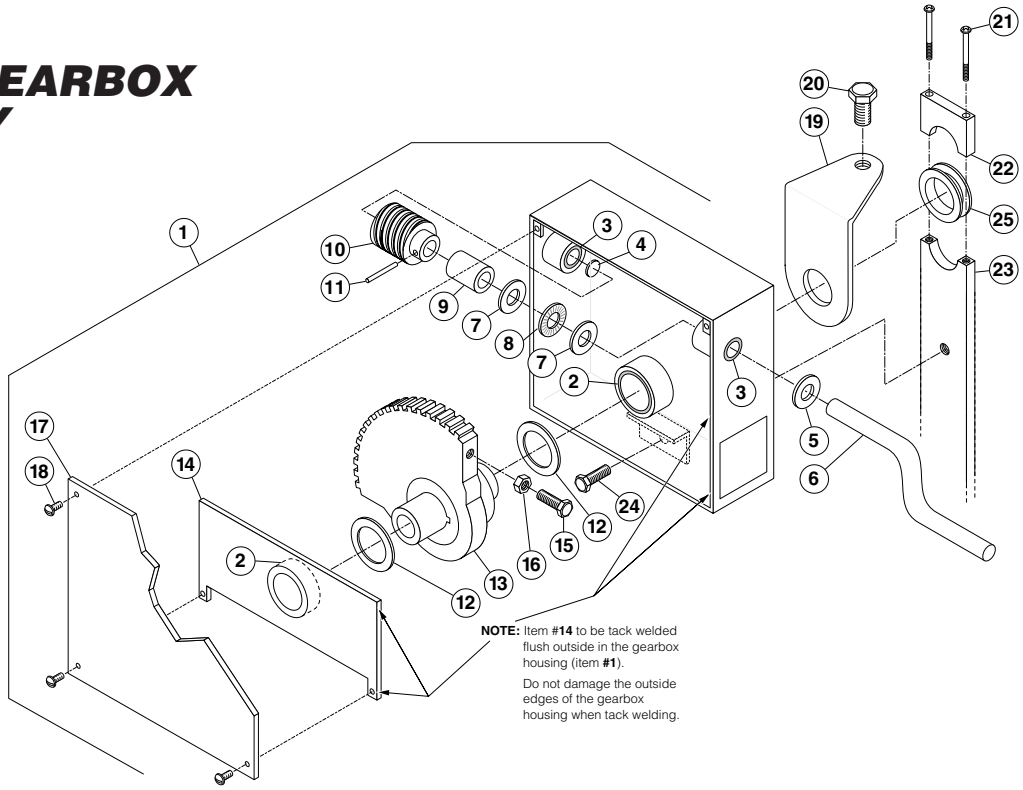

ITEM NO.	PART NO.	DESCRIPTION	QTY.
1.-16.	KE02062-1	Tilting Gearbox Assembly	1
1.	KE02060	Gearbox Housing	1
2.	KE50198	Bearing, trunnion	2
3.	KE54739-2	Bearing, tilt shaft	2
4.	KE54737	End Housing Spacer, tilt shaft, bronze	1
5.	KE54738-3	Washer	1
6.	KE50306-1	Tilt Shaft	1
7.	KE52192	Bearing Washer	2
8.	KE52191	Bearing	1
9.	KE50426-3	Spacer, worm gear	1
10.	KE50315	Worm Gear	1
11.	FA95005	Tension Pin	1
12.	KE54738-1	Washer	2
13.	KE02059	Segment Gear and Spacer Assembly	1
14.	KE02061	Trunnion Bearing Housing Holder Assembly c/w Bearing	1
15.	FA10485	Hex Head Bolt	1
16.	FA20008	Hex Nut	1
17.	KE54729	Gear Box Cover	1
18.	FA11146	Binding Head Screw, 8-32 x 3/8"	4
19.	KE54750-2	Tilt Bracket	1
20.	KE54732	Hex Head Bolt	1
21.		Screw	2
22.	KE54656-4	Support Bar Top - End	1
23.		Support Bar	1
24.	KE54732	Hex Head Bolt	1
25.	SK50403-2	Bronze Bearing	1

ELECTRICAL PANEL

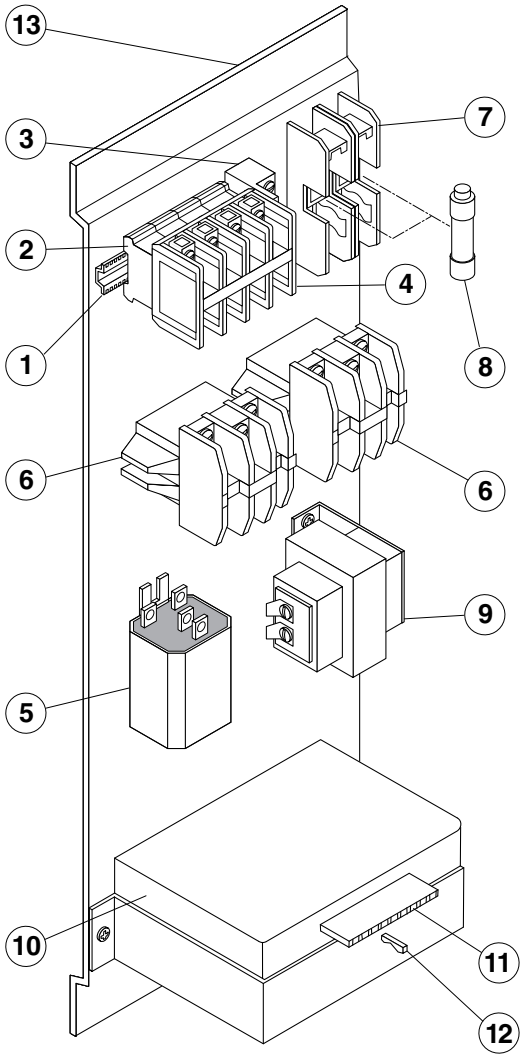

ITEM NO.	PART NO.	DESCRIPTION	QTY. Single / Twin
1.	KE54761	Terminal Block Mounting Strip	1/2
2.	SK50055-1	Terminal Block	3/6
3.	SK50054-2	Terminal Block End Anchor	1/2
4.	SK50054-1	Terminal Block End Barrier	1/2
5.	KE50753-7	Relay	1/2
6.	KE50749-2	Contactor, 208-240v	2/4
7.	KE51139-1	Fuse Holder (480v only)	2/4
8.	KE52936-1	Fuse (480v only)	2/4
9.	KE53838-21	Transformer	1/2
10.	KE00458	Kettle Control Box	1/2
11.	KE51225	Edge Connector, 10 Pin	1/2
12.	KE51226	Wire Connector Terminal	10/20
13.	KE50343-1	Component Mounting Plate	1/2

MAINTENANCE

ALL SERVICE MUST BE PERFORMED BY A QUALIFIED SERVICE TECHNICIAN.

Cleveland Range equipment requires little preventative maintenance. We do however provide the following chart as a guideline for inspection and maintenance to keep your unit functioning at 100%.

INSPECTION AND MAINTENANCE CHECK LIST

The following check should be completed every six months or more frequently if unit is in a high volume facility.

WARNING: It is imperative that damaged seals be repaired immediately to prevent equipment failure and/or damage.

ITEM	CHECK
CONSOLE COVER SEAL	Insure there are four screws firmly holding down the cover. If not replace screws and/or missing or worn nylon anchor nuts.
BOTTOM COVER GASKET	Check to see it is in place and is not cracked or split.
TILTING	Check that kettle tilts smoothly. Grease as described in Bearing Lubrication Procedure (page 16).
TILT HANDLE	Check handle for tightness. If loose apply lock tight and reinstall. Check handle knob is on end of handle and firmly tightened. If loose apply lock tight and reinstall.
PRESSURE GAUGE	Check that the gauge does not have moisture on its inside face. Replace if moisture is present. Check that the gauge shows a vacuum (needle is well into the Green zone) when cold and shows between 25-40 psi when unit is hot. If not follow Vacuum Leak Test Procedure (page 19).
PRESSURE RELIEF VALVE	Check pressure relief valve as described in Pressure Relief Valve Periodic Testing Procedure (page 17).
TEMPERATURE CHECK	Following Calibrating Procedure (page 17) check the inner kettle surface temperature with a digital surface thermometer and adjust if required.

BEARING LUBRICATING PROCEDURE

1. Remove console cover.

2. Loosen two Allen screws on locking ring.

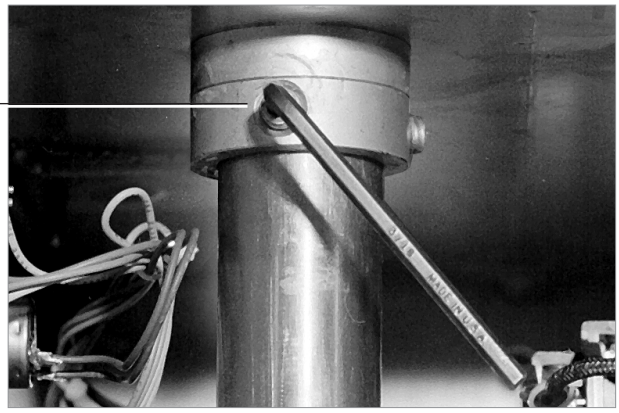

3. Pull locking ring to center of trunnion.

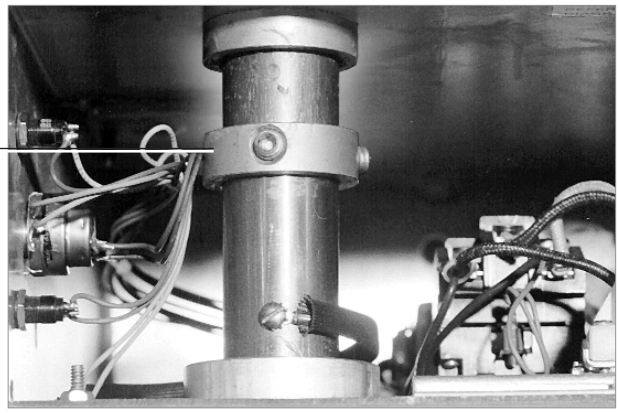

4. Pull kettle two inches away from console and rest on support block.

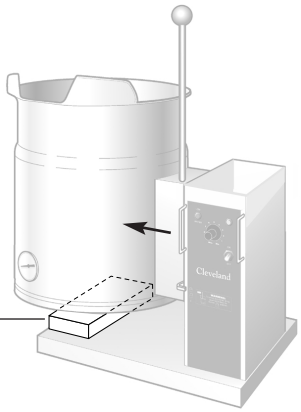

5. Clean newly exposed sections of trunnion.

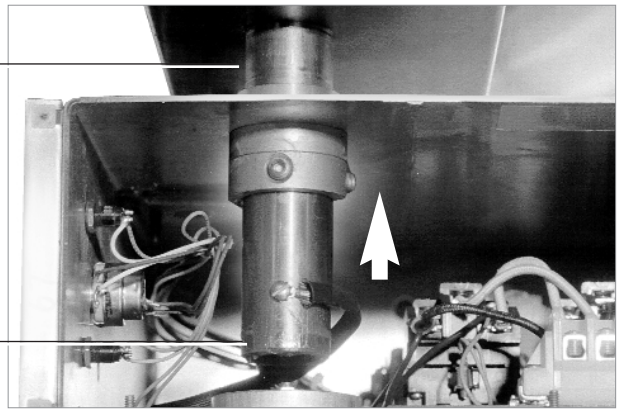

6. Grease trunnion between kettle and console.

7. Repack outer needle bearing.

8. Push kettle back in place.

10. Reinstall trunnion and lock collar.

11. Replace console cover.

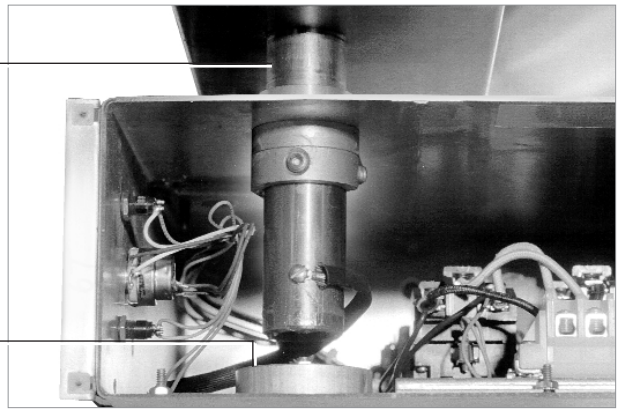

CALIBRATING PROCEDURE

1. Insure the unit has a vacuum before you begin calibrating procedures. If unit requires venting refer to Kettle Venting Instructions on page 18 of this manual.
2. Turn kettle ON and set temperature dial to 10 (Max.).
3. Allow the unit to cycle twice.
4. Check temperature of the inner kettle surface with a digital surface thermometer.
5. Temperature should be between 260° F and 265° F.
6. Using a screw driver adjust temperature by turning the potentiometer on the black box. Turn very little. Turn clockwise to INCREASES and counter-clockwise to DECREASE temperature.
7. Allow the unit to cycle twice.
8. Check temperature of the inner kettle surface with a digital surface thermometer.
9. Repeat steps 4 through 8 until unit is calibrated.

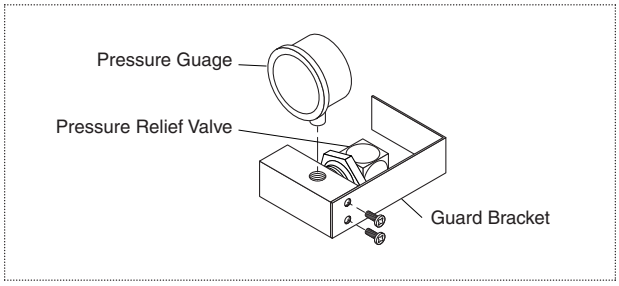

Pressure Relief Valve/Gauge Assembly Drawing

PRESSURE RELIEF VALVE PERIODIC TESTING PROCEDURE

WARNING: IMPROPER REFILLING OF KETTLE JACKET WILL RESULT IN IRREVERSIBLE DAMAGE TO UNIT.

Most insurance agencies require periodic testing of pressure relief valves used on pressure vessels. This procedure will allow you to safely and quickly test your kettle's pressure relief valve. We recommend this test be performed twice a year.

NOTE: The following instruction is intended for use by qualified service personnel.

WARNING: Kettle surface will be hot and steam will be released during testing. Take necessary precautions including the use of gloves and eye protection to prevent personal injury.

DANGER: PRESSURE RELIEF VALVE WILL EXHAUST HIGH TEMPERATURE STEAM. CONTACT WITH SKIN COULD RESULT IN SERIOUS BURNS. KEEP FACE, HANDS AND BODY CLEAR OF DISCHARGE.

DANGER: WORKING ON MACHINES WITH POWER COULD RESULT IN SEVERE ELECTRICAL SHOCK.

1. Remove guard bracket from pressure relief valve/gauge assembly.
2. With the kettle empty, turn unit ON and set temperature control to 10 (Max.). Allow the kettle to heat until the unit cycles off.
3. Switch unit OFF and disconnect main power at fused disconnect switch.

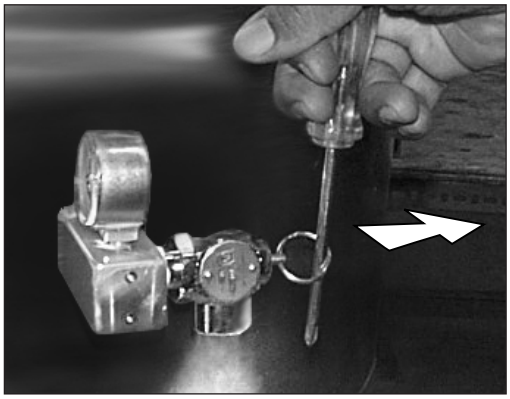

4. Stand to the side of the pressure relief valve discharge tube and pull valve open for a maximum of one second. Repeat test three to four times. Each time the mechanism should move freely and be accompanied by a rapid escape of steam.
5. Replace guard bracket from pressure relief valve/gauge assembly.

If valve appears to be sticking replace pressure relief valve.

If foreign material is discharged then drain kettle and replace pressure relief valve.

See Reservoir Fill Procedure (page 18) for full instructions on the correct method for refilling kettle jacket.

WARNING: Improper refilling of kettle jacket will result in irreversible damage to unit.

NOTE: Rust inhibitor is purchased locally. Read directions and do not exceed manufacturer's recommendation (excessive rust inhibitor can also cause solidification).

RESERVOIR FILL PROCEDURES

The kettle's water level must be maintained at the proper level to submerge the heater elements. Under normal operating conditions, the sealed water reservoir should never require the addition of water.

If the red "low water" light comes on during use (while the kettle is in an upright position), the water level has reached a critically low level. The low water protection control has automatically shut off the heater elements. The following procedure must be completed before further use:

NOTE: Have a qualified service technician repair the leakage problem and add water to the unit. Ensure that the red "low water" light is on when the kettle is upright. On tilting kettles, it is normal for the red light to come on when the kettle is in a tilted position, as the elements are not submerged in water at this point.

CAUTION: Only a mixture of distilled water and rust inhibitor should be used when adding water to a partially filled water reservoir. Local tap water conditions may cause kettle damage which is not covered under warranty. Rust inhibitor is purchased locally. Read directions and do not exceed manufacturer's recommendation (excessive rust inhibitor can also cause solidification).

DISTILLED WATER REQUIREMENTS

Kettle Capacity	When Red "Low Water Light" comes on, add Distilled Water	When the Reservoir is Completely Empty, Add Distilled Water
3 gallon	50 ounces	120 ounces
6 gallon	70 ounces	160 ounces
12 gallon	120 ounces	2 gallon
20 gallon	1 gallon	3 gallon

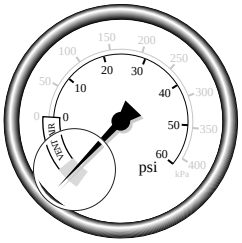

1. Ensure kettle is at room temperature and pressure gauge showing zero or less pressure.
2. Shut off power to the kettle at the fused disconnect switch.

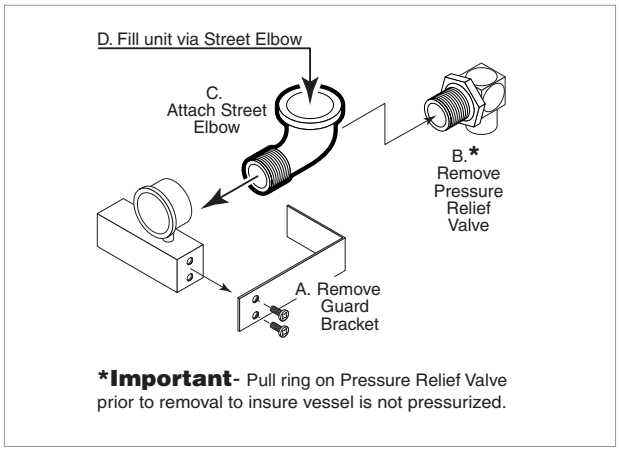

Pressure Relief Valve/Gauge Assembly Drawing

3. Remove Guard Bracket (A).
4. Pull Pressure Relief Valve (B) open to insure vessel is not pressurized.
5. Remove Pressure Relief Valve (B).
6. Replace Pressure Relief Valve (B) with Street Elbow (C).
7. Add distilled water (D) through the Street Elbow (C), using a funnel if necessary. Refer to ***Distilled Water Requirements*** chart for the proper amount required.
8. Apply a thread sealant (i.e. Teflon tape) to the Pressure Relief Valve's (B) thread and replace.
9. Replace Guard Bracket (A).
10. Restore power to unit at the fused disconnect switch.
11. The kettle must now be vented. (Refer to the Kettle Venting Instructions shown below).

KETTLE VENTING INSTRUCTIONS

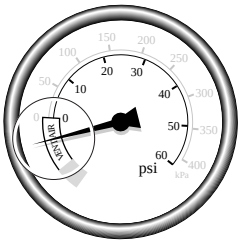

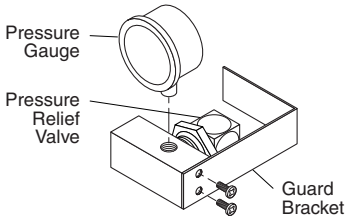

The following venting procedure should be followed when the Vacuum/Pressure Gauge needle is in the "VENT AIR" zone:

NOTE: Check for and eliminate leaks prior to venting (See Repairing Leaks in Steam Jacketed Kettle Fittings on page 19).

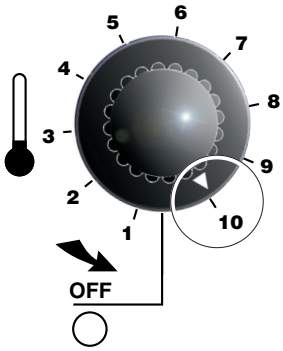

1. Remove guard bracket from pressure relief valve/gauge assembly.
2. Turn kettle ON and set Temperature Control to **10** (Max.), heat the empty kettle until unit cycles off.
3. Vent kettle by pulling safety valve ring 8-10 times in short 2-3 second blasts with a 5 second interval between pulls.

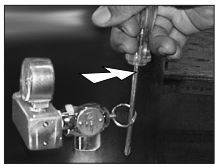

NOTE: If unit cycles ON, stop venting and wait for kettle to cycle OFF before continuing.

4. Turn kettle OFF. Add cold water to kettle until its surface temperature is below 100°F. The pressure gauge needle should be in the green zone, indicating a vacuum in the kettle's jacket.
5. Replace guard bracket from pressure relief valve/gauge assembly.

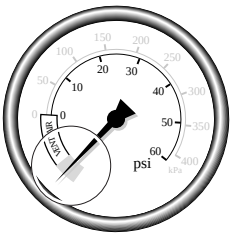

VACUUM LEAK TEST PROCEDURE

If the kettle will not hold vacuum, test for leaks at:

A. Water Level Probe (Remove bottom cover).

B. Pressure Relief Valve.

C. Pressure Gauge.

LEAK TEST PROCEDURE:

1. Heat kettle until unit cycles off.

2. Shut off power to the kettle at the fused disconnect switch.

3. Spread Bubble Type Leak Detector over suspected areas and watch closely for bubbles.

4. Repair areas as required.

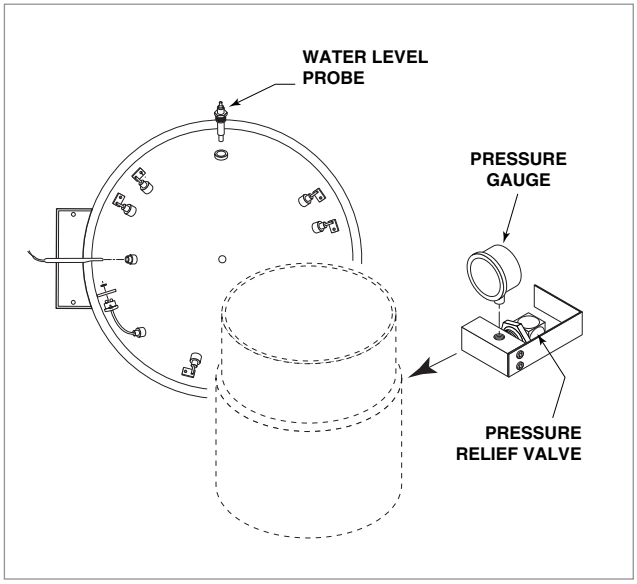

REPAIRING LEAKS IN STEAM JACKETED KETTLE FITTINGS

If unit will not hold a vacuum the most likely cause is a leak at one of the fittings.

Often, the easiest way to eliminate a leak is reseal the suspect areas.

1.	Water Level Probe	Remove, clean threads, apply teflon thread sealant and reinstall.
2.	Pressure Relief Valve	**A**/ Inspect for signs of leaks. Replace if required.
		B/ Remove, clean threads, apply teflon thread sealant and reinstall.
3.	Pressure Gauge	**A**/ Inspect face of gauge. If it contains moisture on the inside of face replace.
		B/ Remove, clean threads, apply teflon thread sealant and reinstall.

MARINE LOCK TESTING PROCEDURE

1. Check that lock clears stop pin on side box without rubbing when kettle is tilted (Figure **A**).

2. Check side to side play. Lock should remain fully over stop pin when pushed to it's maximum side to side play (Figure **B**).

3. Check that the kettle when pushed fully upright moves the lock to a closed position. To check this:

A/ Hold the latch firmly in the <u>unlocked</u> position while tilting the kettle back to an upright position.

B/ The kettle sidebox will force the lock into a new position.

C/ Hold the lock in this position and try to tilt the kettle forward. The latch should prevent the kettle from tilting.

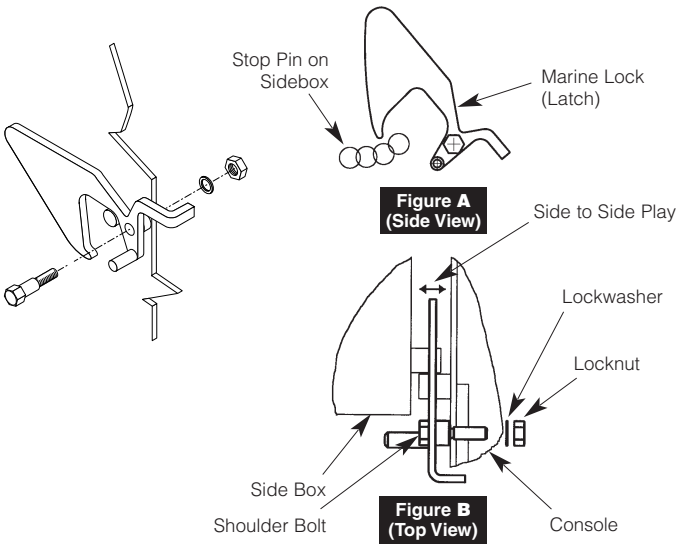

4. Check shoulder bolt is firmly seated against console body.

5. Check on inside of console box that shoulder bolt locknut is secure.

DIAGNOSTIC GUIDE

This section contains servicing information intended for use by Authorized Service Personnel.

NOTE 1: If Fault Isolation Procedure is required, be sure to start at step #**1**.

NOTE 2: On table type kettles the entire control mounting panel may be removed from kettle control housing for easier troubleshooting and parts replacement.

A/ Problem: Kettle is not heating at all. (Kettle must be on and temperature control set.)

Possible Causes

1. No incoming power.
2. Kettle is tilted.
3. Low water condition.
4. Defective ON/OFF switch.
5. Defective 12 VDC relay.
6. Defective safety thermostat.
7. Defective contactor/s.
8. Defective potentiometer (temperature control).
9. Defective low water level probe.
10. Defective thermistor.
11. Defective 240/16 VAC transformer.
12. Defective control box.
13. Defective elements.

Fault Isolation Procedure

Step	*Test*	*Result*	*Remedy*
1.	Is there proper incoming voltage at terminal block?	Yes	Go to step #**2**.
		No	Correct external power supply problem.
2.	Is the red LED illuminated?	Yes	Follow Reservoir Fill Procedure (page 18). If this does not correct the problem, go to Problem **D**.
		No	Go to step #**3**.
3.	Is the green LED illuminated?	Yes	Go to step #**4**.
		No	Go to step #**7**.
4.	Do both contactors energize?	Yes	Check contactor contacts for pitting. Voltage across contactor terminals while in a closed position indicates a poor contact. Replace contactor/s as necessary. Check elements for short at ground or an open circuit. If element/s are defective contact the factory. Elements are not field replaceable.
		No	Go to step #**5**.
5.	Measure continuity across safety thermostat. Is it an open circuit?	Yes	Replace defective safety thermostat.
		No	Go to step #**6**.
6.	Is there 120 VAC present across the coils of the contactors?	Yes	Replace defective contactor/s.
		No	Go to step #**6**.
7.	Remove wire from low water level probe and ground it to the body of the kettle. Do the contactors now energize?	Yes	Clean or replace defective low water level probe. Replace defective red LED.
		No	Go to step #**8**.
8.	Is there 16 VAC present at output of 16 VAC transformer?	Yes	Go to step #**9**.
		No	Replace defective 240/16 VAC transformer.

9.	Measure continuity of ON/OFF switch/ temperature control. Is it operating properly?	Yes No	Go to step #**10**. Replace defective ON/OFF switch/ temperature control.
10.	Unplug control box and measure the resistance across potentiometer. Is it approximately 0 ohms at maximum setting and 50,000 ohms at minimum?	Yes No	Go to step #**11**. Replace defective potentiometer (ON/OFF switch/temperature control)
11.	Remove edge connector from control box. While kettle is cold or thermistor is removed and allowed to cool, measure the resistance between edge connector's pins #2 and #7. Is it approximately 100,00 ohms?	Yes No	Spray contact cleaner on control box terminals and edge connector. Try box again, if the problem still exists, replace defective control box. Replace defective thermistor.

B/ Problem: Kettle heats too slowly or not hot enough. (**Note**: normal max. operating pressure with an empty kettle is 30-35 psi.)

Possible Causes

1. Air in jacket requires venting.
2. Defective safety thermostat.
3. Defective potentiometer (temperature control).
4. Defective thermistor.
5. Defective contactor/s.
6. Defective control box.
7. Defective elements/s.

Fault Isolation Procedure

Step	*Test*	*Result*	*Remedy*
1.	In a cold state, does the pressure gauge read in the green zone?	Yes No	Go to step #**2**. There is air present in the jacket of the kettle. Follow Kettle Venting Procedure (page 18). If constant venting is required, there is a leak that should be corrected.
2.	Do the contactors shut off too early? (before reaching normal maximum operating pressure.)	Yes No	Go to step #**3**. Check contactor contacts for pitting. Voltage across terminal of contactor while energized signifies a poor contact. Replace contactor/s as necessary. Check elements for short to ground or open circuit. If elements are defective, contact the factory. Elements are not field replaceable.
3.	Does the green LED remain illuminated after the contactors shut off?	Yes No	Replace defective safety thermostat. Go to step #**4**.
4.	Unplug control box and measure the resistance across potentiometer (temperature control). Is it approximately 0 ohms at maximum and 50,000 ohms at minimum setting?	Yes No Yes	Go to step #**5**. Replace defective thermistor. Go to step #**6**.

5.	Remove kettle thermistor and allow to cool. Remove edge connector from control box. Test resistance across edge connector's pins #2 and #7. Is it approximately 100,000 ohms?	No	Replace defective thermistor
6.	Turn the potentiometer on the control box clockwise to increase the maximum operating temperature. Does the kettle now achieve maximum operating pressure of 30-35 psi in an empty kettle?	Yes No	Kettle is operating correctly. Spray contact cleaner on control terminals and edge connector. Try box again. If problem still exists, replace defective control box.

C/ Problem: Kettle is overheating.

Possible Causes

1. Defective thermistor
.

2. Defective potentiometer (temperature control).

3. Defective 12 VDC relay.

4. Defective control box.

Fault Isolation Procedure

Step	*Test*	*Result*	*Remedy*
1.	Does the green LED turn off even though the contactors remain energized?	Yes No	Replace defective 12 VDC relay. Go to step #**2**.
2.	Unplug the control box and measure the resistance across the potentiometer (temperature control), Is the resistance approximately 0 ohms at maximum and 50,000 ohms at minimum setting?	Yes No	Go to step #**3**. Replace defective thermistor.
3.	Remove kettle thermistor and allow to cool Remove edge connector from control box. Test resistance across edge connector's pins #2 and #7. Is it approximately 100,000 ohms?	Yes No	Go to step #**4**. Replace defective thermistor.
4.	Turn the potentiometer (temperature control) on the control box counter-clockwise to decrease the maximum operating temperature. does the kettle continue to overheat?	Yes No	Spray contact cleaner on control box terminal and edge connector. Try box again. If problem still exists, replace defective control box. Kettle is operating correctly.

D/ Problem: Red LED remains illuminated even though water has been added.

Possible Causes

1. Defective low water level probe

2. Defective control box.

Fault Isolation Procedure

Step	*Test*	*Result*	*Remedy*
1.	Remove wire from low water level probe and ground the wire to the body of the kettle. Does the red LED turn off?	Yes No	Replace or clean defective low water level probe. Spray contact cleaner on control box terminals and edge connector. Try box again. If problem still exist, replace defective control box.

WIRING DIAGRAM

3 Gallon Kettles

200-240v

Single Phase Only

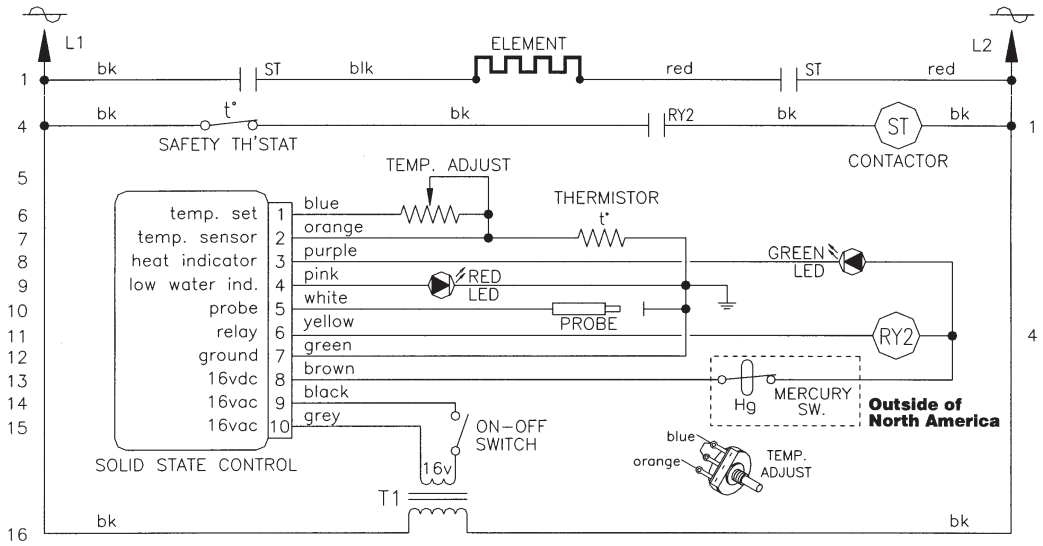

380-480v

Single Phase Only

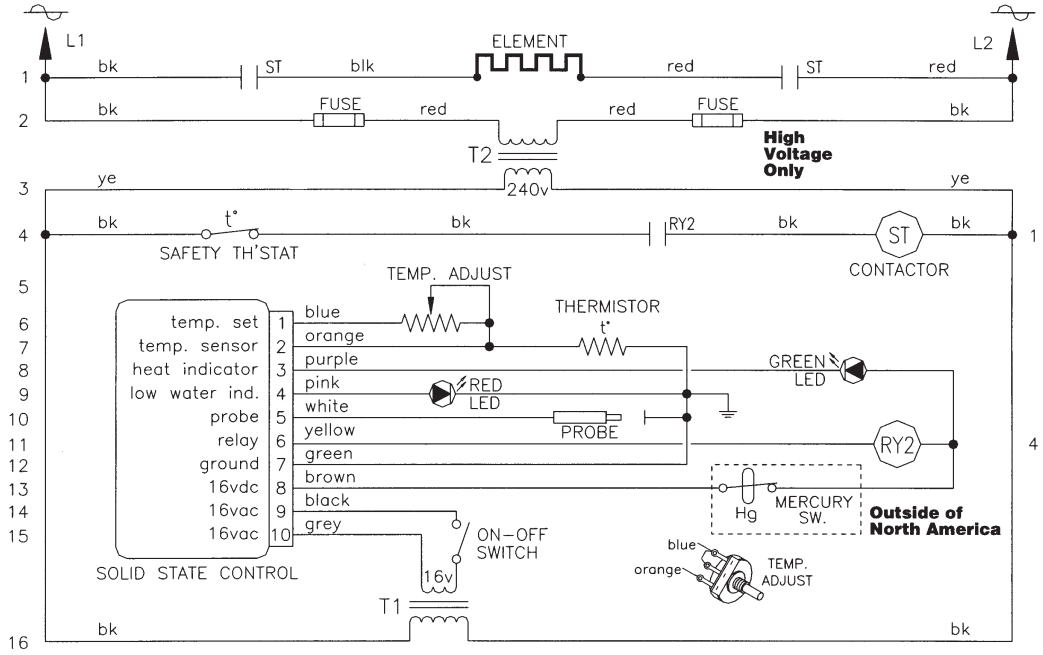

WIRING DIAGRAM

6-20 Gallon

200-240v

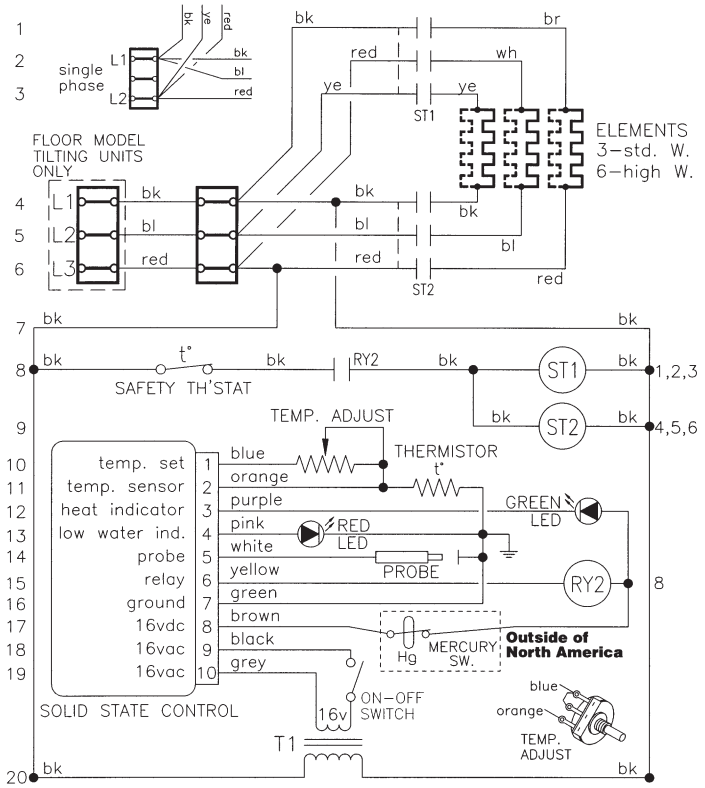

380-600v

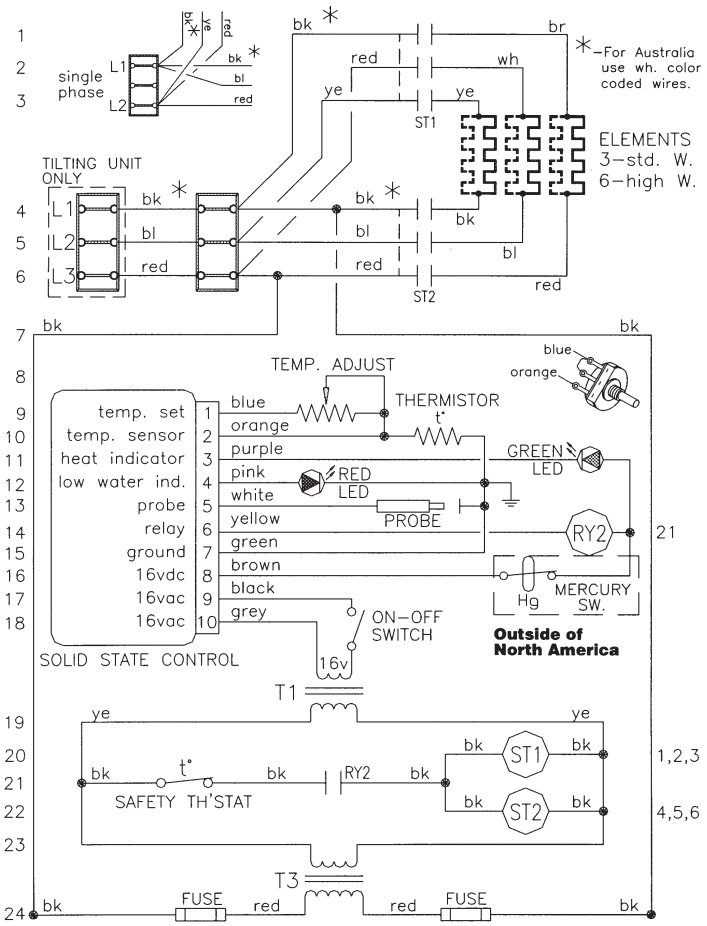

Symbol Legend *(page 1 of 2)*

❒ English ❒ French ❒ Spanish ❒ Italian ❒ German ❒ Chinese-Simplified ❒ Chinese-Traditional

RISK OF ELECTRICAL SHOCK
DANGER DE SECOUSSE ÉLECTRIQUE
PELIGRO DE ELECTROCHOQUE
PERICOLO DI SCOSSA
STROMSCHLAG-GEFAHR
有触电危险
有觸電危險

SPLASHPROOF
ANTIÉCLABOUSSURES
A PRUEBA DE SALPICADURAS
PROTETTO CONTRO GLI SPRUZZI
SPRITZWASSERDICHT
防溅水的
防濺水的

DISCONNECT ELECTRICAL SUPPLY BEFORE WORKING ON KETTLE
COUPER LE COURANT AVANT D'INTERVENIR SUR L'ÉQUIPEMENT
DESCONECTAR LA ALIMENTACION ELECTRICA ANTES DE REALIZAR TRABAJOS EN EL EQUIPO
DISINSERIRE LA CORRENTE PRIMA DI LAVORARE SULLA MACCHINA
STROMVERSORGUNG AUSSCHALTEN, BEVOR AM GERÄT GEARBEITET WIRD
操作设备前切断电源
操作設備前切斷電源

MAIN POWER
ALIMENTATION ÉLECTRIQUE
ALIMENTACION PRINCIPAL
ALIMENTAZIONE
HAUPTSTROM
主电源
主電源

ON
MARCHE
ENCENDIDO
ACCESO
AN
开
開

OFF
ARRÊT
APAGADO
SPENTO
AUS
关
關

PAUSE, INTERRUPTION
PAUSE, INTERRUPTION
PAUSA, INTERRUPCION
PAUSA, INTERRUZIONE
PAUSE, UNTERBRECHUNG
暂停，间断
暫停，間斷

CONTINUE
CONTINUER
CONTINUAR
CONTINUA
WEITER
继续
繼續

RESET
RÉENCLENCHER
RECONECTAR
RESET
NULLSTELLEN
重新设定
重新設定

START OF ACTION
DÉBUT DE L'ACTION
INICIAR FUNCIONAMIENTO
INIZIO OPERAZIONE
FUNKTION STARTEN
开始操作
開始操作

STOP OF ACTION
ARRÊT DE L'ACTION
PARAR FUNCIONAMIENTO
ARRESTO OPERAZIONE
FUNKTION STOPPEN
停止操作
停止操作

FAST START
DÉMARRAGE RAPIDE
INICIO RAPIDO
AVVIAMENTO RAPIDO
SCHNELLER START
快启动
快啓動

FAST STOP, EMERGENCY
ARRÊT RAPIDE D'URGENCE
PARADA RAPIDA, EMERGENCIA
ARRESTO RAPIDO, EMERGENZA
SCHNELLER STOPP, NOTFALL
快止动，紧急
快止動，緊急

Symbol Legend *(page 2 of 2)*

❒ English ❒ French ❒ Spanish ❒ Italian ❒ German ❒ Chinese-Simplified ❒ Chinese-Traditional

AUTOMATIC TEMPERATURE CONTROL
COMMANDE AUTOMATIQUE DE LA TEMPÉRATURE
AJUSTE AUTOMATICO DE TEMPERATURA
CONTROLLO AUTOMATICO TEMPERATURA
AUTOMATISCHE TEMPERATURREGELUNG
自动温度控制
自動溫度控制

LOW WATER
NIVEAU BAS DE L'EAU
NIVEL DE AGUA BAJO
LIVELLO BASSO
WASSERSTAND NIEDRIG
低水量
低水量

BURNER AND/OR ELEMENT ENERGIZED
BRÛLEUR ET/OU ÉLÉMENT ALLUMÉ
QUEMADOR O ELEMENTO ENCENDIDO
FIAMMA E/O ELEMENTO ATTIVATI
BRENNER ODER ELEMENT EINGESCHALTET
燃烧器和/或元件带电
燃燒器和/或元件帶電

IGNITION FAILURE
PANNE D'ALLUMAGE
FALLO DE ENCENDIDO
MANCATA ACCENSIONE
ZÜNDUNGSFEHLER
点火失效
點火失效

HEATING
ÉBULLITION
CALEFACCION
RISCALDAMENTO
HEIZUNG
加热
加熱

COOLING
REFROIDISSEMENT
REFRIGERACION
RAFFREDDAMENTO
KÜHLUNG
冷却
冷卻

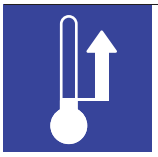

HEAT ADJUSTMENT
RÉGLAGE DE LA CHALEUR
REGULACION DE CALOR
REGOLAZIONE RISCALDAMENTO
WÄRMEREGULIERUNG
热调节
熱調節

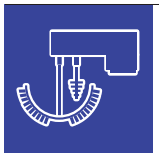

MIXER BRIDGE
PONT DU MÉLANGEUR
PUENTE DE MEZCLADORA
MENSOLA MESCOLATORE
MISCHER-BRÜCKE
搅拌桥
攪拌橋

LEFT KETTLE
BOUILLOIRE GAUCHE
HERVIDOR IZQUIERDO
BOLLITORE SINISTRO
LINKER KOCHKESSEL
左壶
左壺

RIGHT KETTLE
BOUILLOIRE DROITE
HERVIDOR DERECHO
BOLLITORE DESTRO
RECHTER KOCHKESSEL
右壶
右壺

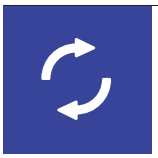

MIX
MÉLANGER
MEZCLAR
MESCOLATURA
MISCHEN
混合
混合

LIFT
LEVER
LEVANTAR
SOLLEVARE
HEBEN
提升
提升

UP
HAUT
ARRIBA
SU
RAUF
向上
向上

DOWN
BAS
ABAJO
GIÙ
RUNTER
向下
向下

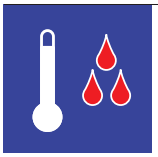

HOT WATER
EAU CHAUDE
AGUA CALIENTE
ACQUA CALDA
HEISSES WASSER
热水
熱水

COLD WATER
EAU FROIDE
AGUA FRIA
ACQUA FREDDA
KALTES WASSER
冷水
冷水

Ref: NAVSEAINST 4160.3A NAVSEA S0005-AA-GYD-030/TMMP

NAVSEA/SPAWAR TECHNICAL MANUAL DEFICIENCY/EVALUATION REPORT (TMDER)

INSTRUCTIONS: Continue on 8 ½" x 11" page if additional space is needed.
1. Use this report to indicate deficiencies, problems and recommendations relating to publications.
2. For CLASSIFIED TMDERs see OPNAVINST 5510H for mailing requirements.
3. For TMDERs that affect more than one publication, submit a separate TMDER for each.
4. Submit TMDERs at web site https://nsdsa2.phdnswc.navy.mil or mail to: **COMMANDER, CODE 310 TMDER BLDG 1389, NAVSURFWARCENDIV NSDSA, 4363 MISSILE WAY, PORT HUENEME CA 93043-4307**

1. PUBLICATION NUMBER	2. VOL/PART	3. REV/DATE OR CHG/DATE	4. SYSTEM/EQUIPMENT ID

5. TITLE OF PUBLICATION	6. REPORT CONTROL NUMBER (6 digit UIC-YY-any four: xxxxxx-03-xxxx)

7. RECOMMEND CHANGES TO PUBLICATION

7a. Page #	7b. Para #	7c. RECOMMENDED CHANGES AND REASONS

8. ORIGINATOR'S NAME AND WORK CENTER	9. DATE	10. ORIGINATOR'S E-MAIL ADDRESS	11. TMMA of Manual (NSDSA will complete)

12. SHIP OR ACTIVITY Name and Address (Include UIC/CAGE/HULL)	13. Phone Numbers:
	Commercial (___) ___-_____ DSN ___-_____ FAX (___) ___-_____

FOLD HERE AND TAPE SECURELY
PLEASE DO NOT STAPLE

INCLUDE COMPLETE ADDRESS

USE PROPER POSTAGE

FOR OFFICE USE ONLY

COMMANDER
CODE 310 BLDG 1389
NAVSURFWARCENDIV NSDSA
4363 MISSILE WAY
PORT HUENEME, CA 93043-4307

FOLD HERE AND TAPE SECURELY
PLEASE DO NOT STAPLE